REV. | LERA LESLIE E. ROBERTSON ASSOCIATES, RLLP CONSULTING STRUCTURAL ENGINEERS | P | DRAWING NO.

DRAFT

DESIGN

CHECK

WTC

Planning

Book

19

K-1056/UP

K- 107P \ 106

1d

Brown

Drawings

Misc

Box 6

Book 19

SKILLING, HELLE, CHRISTIANSEN, ROBERTSON — Structural & Civil Engineers

WTCI-39-LERA

PROJECT THE WORLD TRADE CENTER | TITLE BEAM CONNECTIONS MEZZ. El. 320'-0" | DATE 1-16-72

REVISIONS

10/10/72

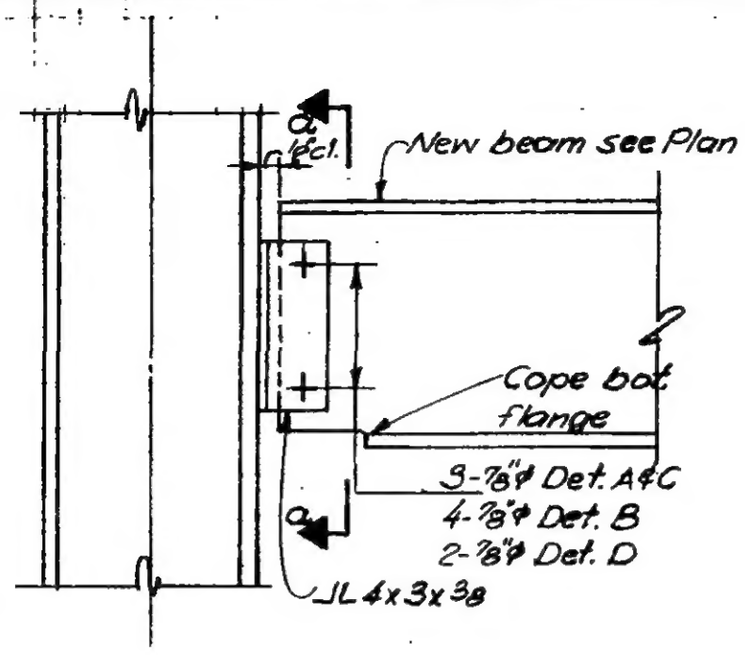

Detail A,B,C&D

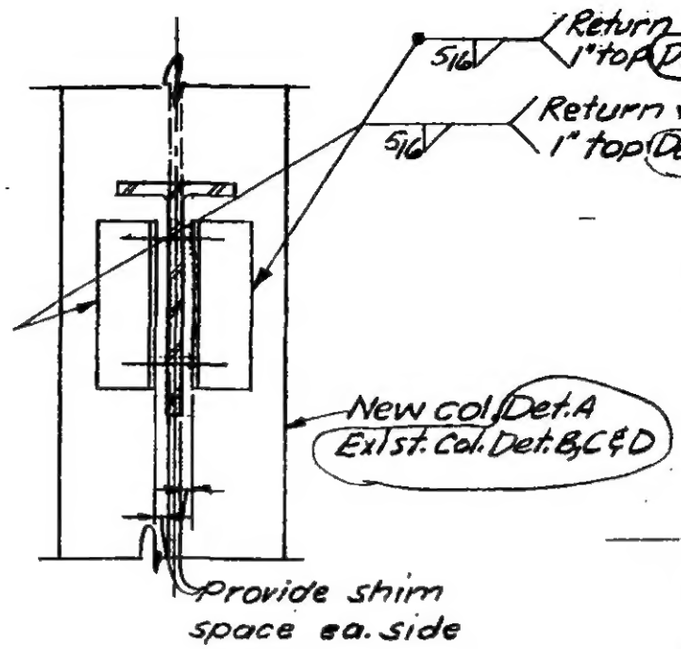

Section a-a

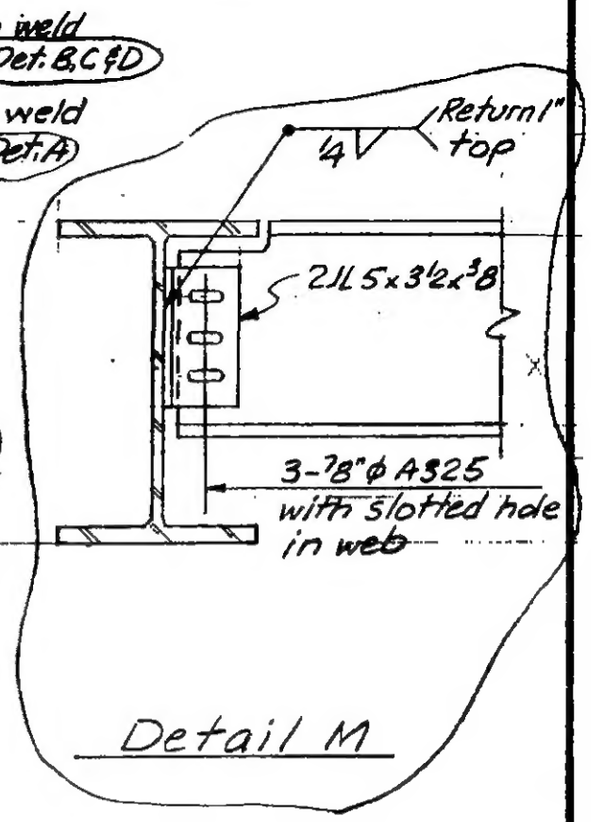

Detail M

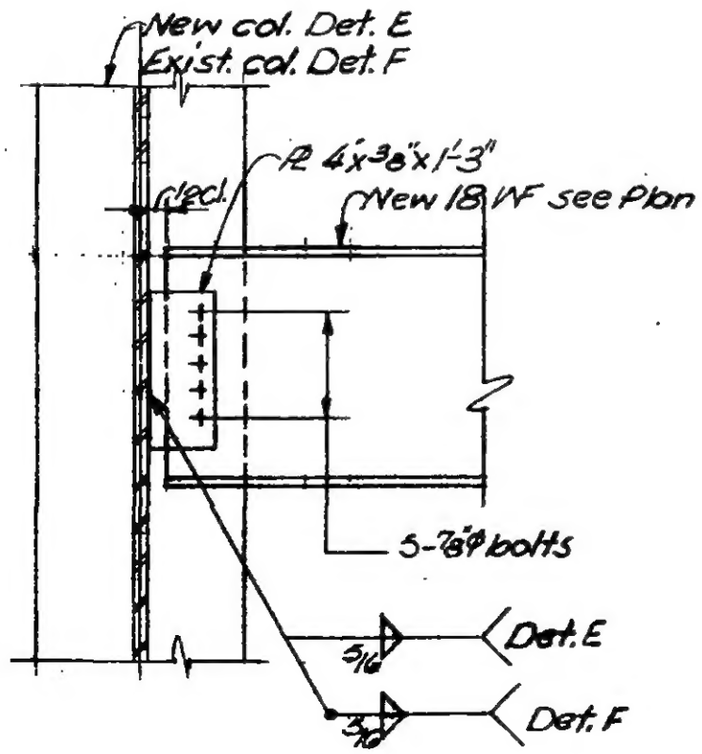

Detail E&F

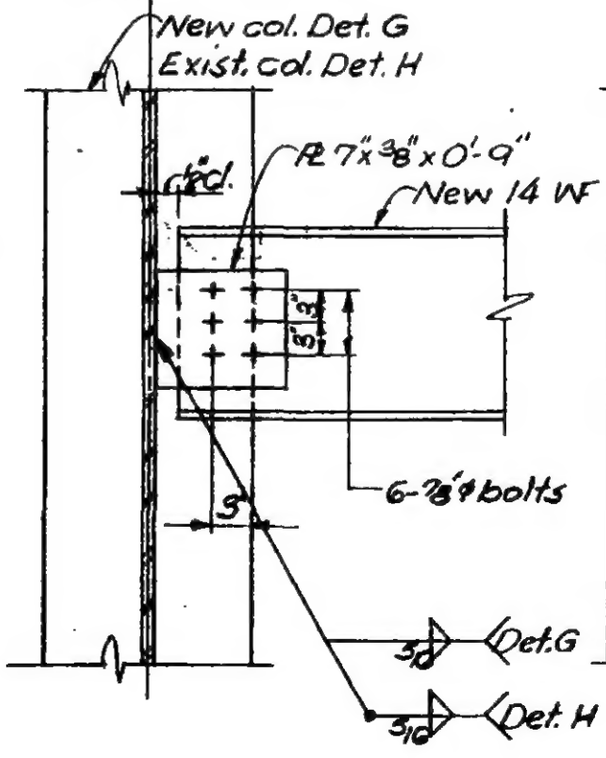

Detail G&H

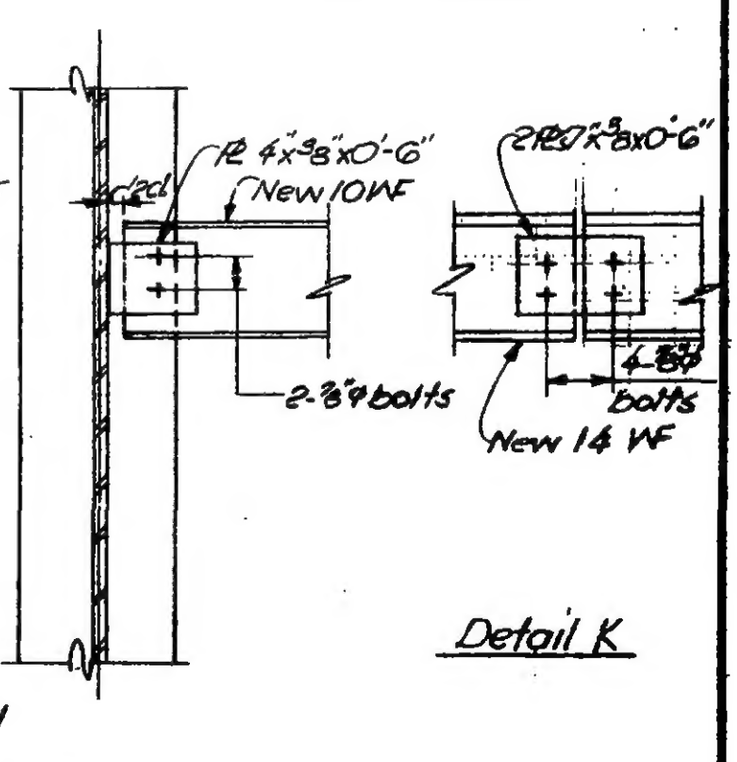

Detail J

Detail K

All bolts A 325

LICENSED PROFESSIONAL ENGINEER — LESLIE E. ROBERTSON — No. 34960 — UNIVERSITY OF THE STATE OF NEW YORK

DESIGNED

DRAWN

REVIEWED

19-K-105G.1

SKILLING, HELLE, CHRISTIANSEN, ROBERTSON — Structural & Civil Engineers

PROJECT THE WORLD TRADE CENTER | TITLE BEAM CONNECTION - MEZZANINE EL 320 | DATE 10/10/72

REVISIONS

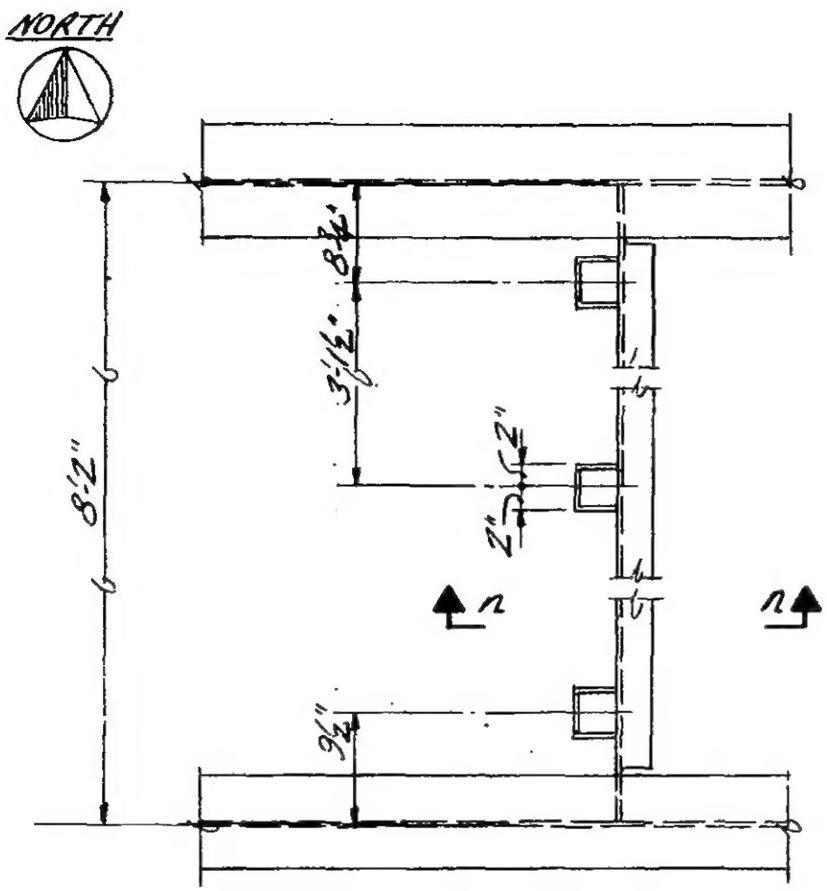

Plan Detail N

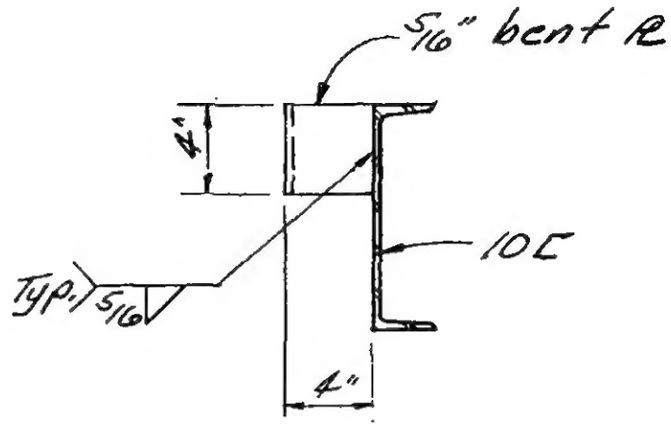

Section n-n

LICENSED PROFESSIONAL ENGINEER
LESLIE E. ROBERTSON
No. 34960
UNIVERSITY OF THE STATE OF NEW YORK

DESIGNED

DRAWN

REVIEWED

19-K-1056.2

SKILLING, HELLE, CHRISTIANSEN, ROBERTSON — Structural & Civil Engineers

PROJECT: THE WORLD TRADE CENTER | TITLE: HANGER DETAILS | DATE: 1-15-72

REVISIONS

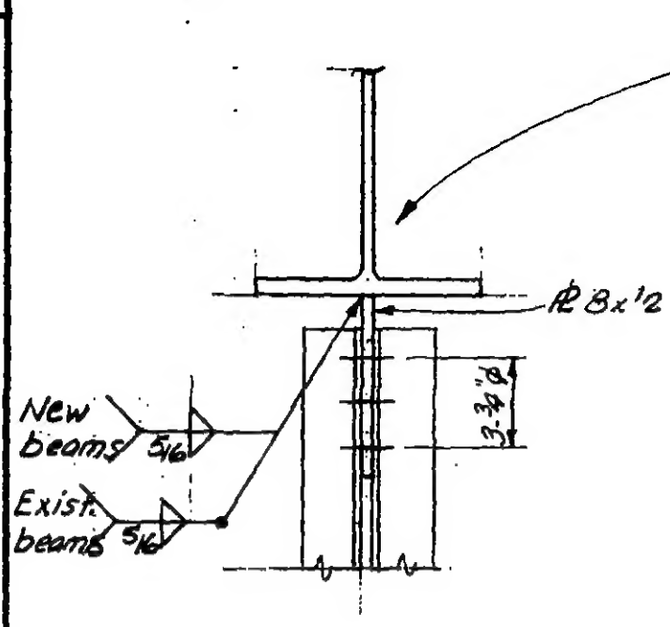

Detail A

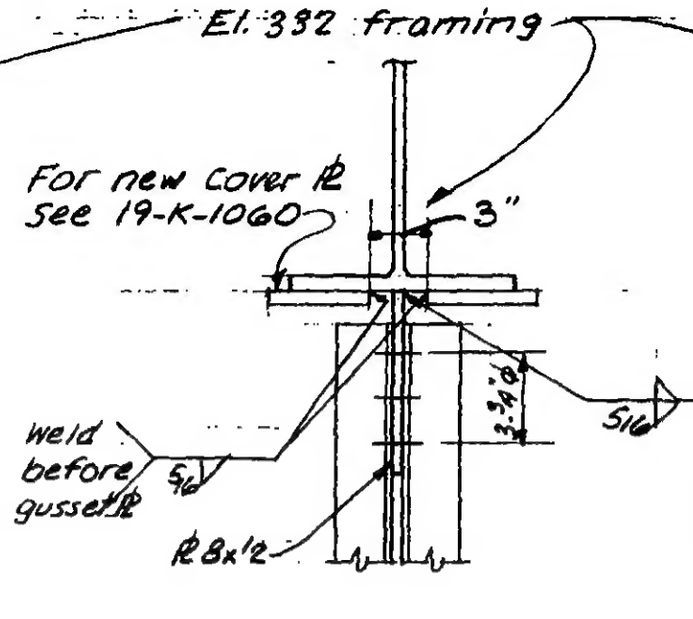

Detail B

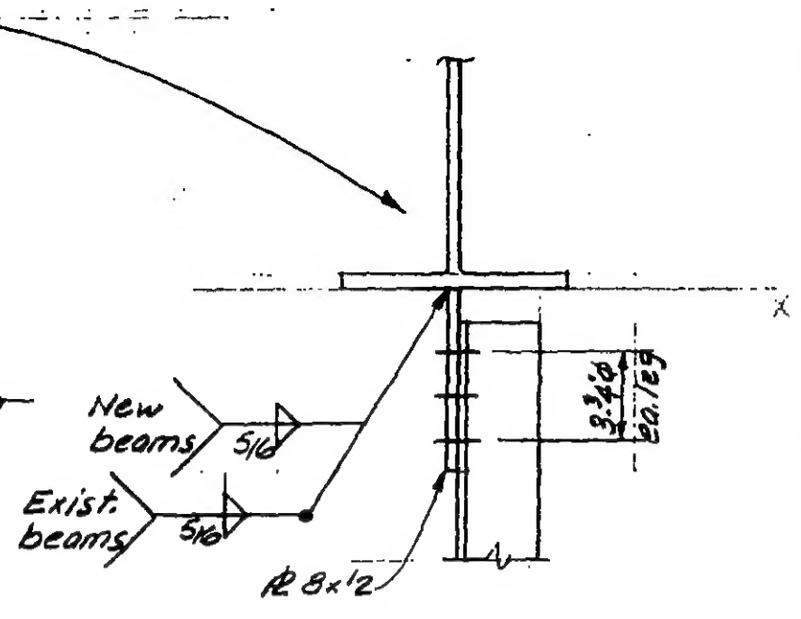

Detail C

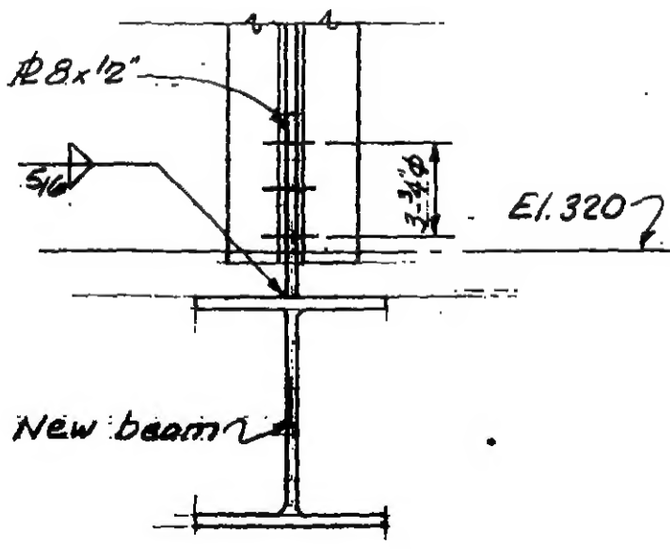

Detail D

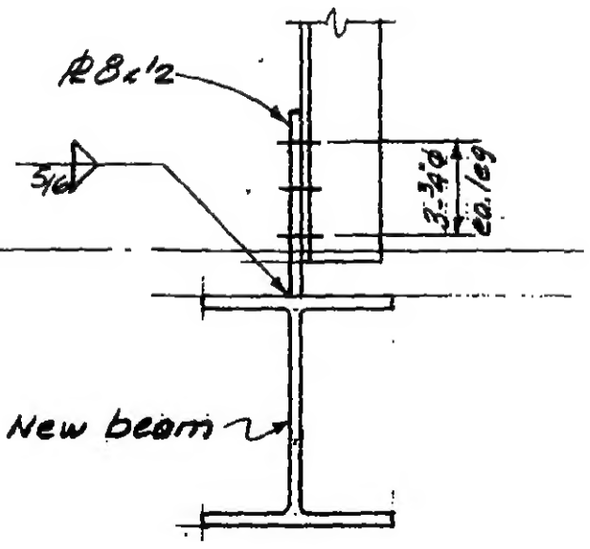

Detail E

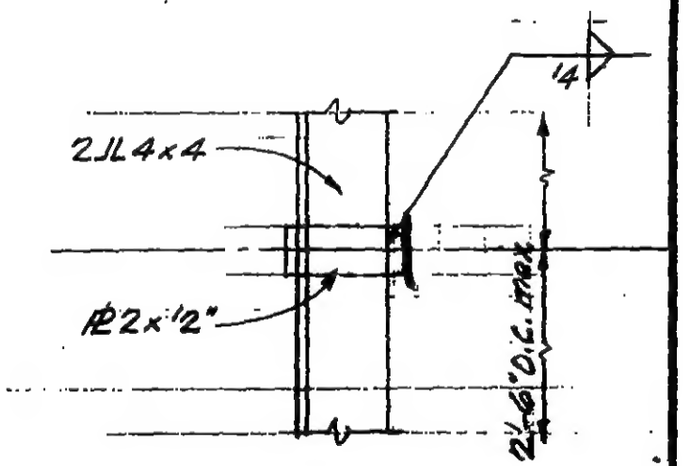

Typical Detail at filler

LICENSED PROFESSIONAL ENGINEER — LESLIE E. ROBERTSON — No. 34360 — UNIVERSITY OF THE STATE OF NEW YORK

DESIGNED W. BREWER

DRAWN A. FERANQUI

REVIEWED W. Brewer

19-K-1057

SKILLING, HELLE, CHRISTIANSEN, ROBERTSON — Structural & Civil Engineers

PROJECT THE WORLD TRADE CENTER | TITLE REPAIR DETAIL ELEVATION 310 | DATE 5-15-72

REVISIONS

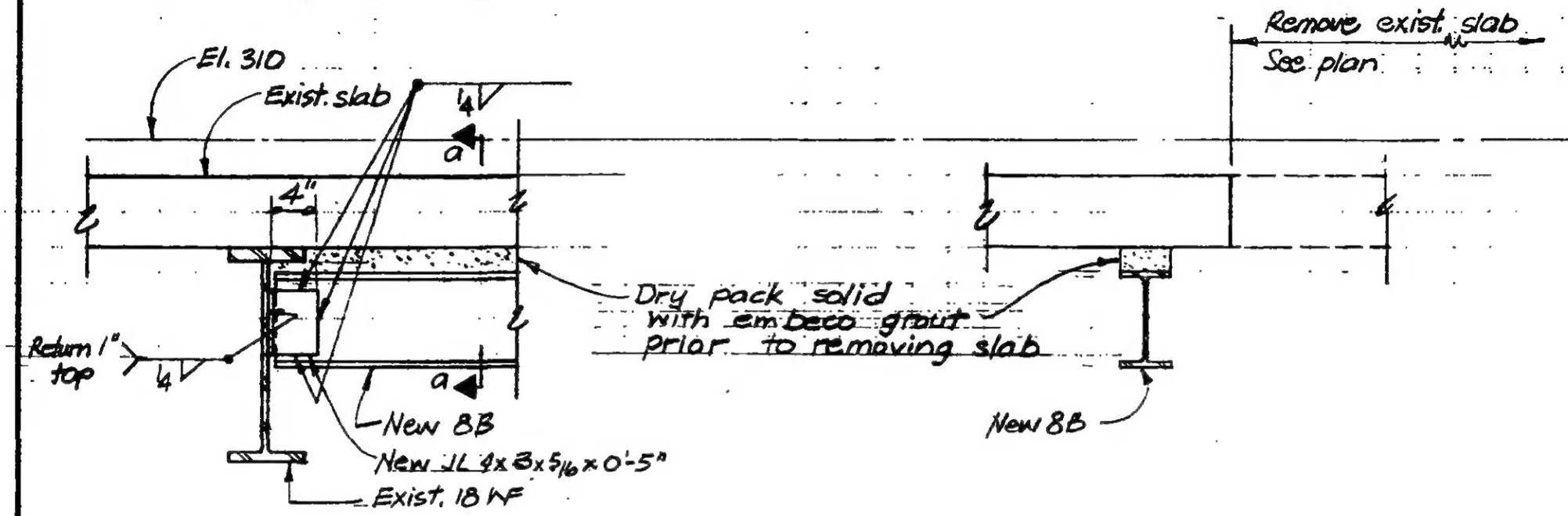

Detail A

Section a-a

LICENSED PROFESSIONAL ENGINEER
LESLIE E. ROBERTSON
NO. 34360
UNIVERSITY OF THE STATE OF NEW YORK

DESIGNED

DRAWN PM Oralei

REVIEWED W Brewer

19-K-1058

SKILLING, HELLE, CHRISTIANSEN, ROBERTSON — Structural & Civil Engineers

PROJECT: THE WORLD TRADE CENTER | TITLE: NEW COLUMN BOSOM & BEARING PLATES | DATE: 1-15-72

REVISIONS

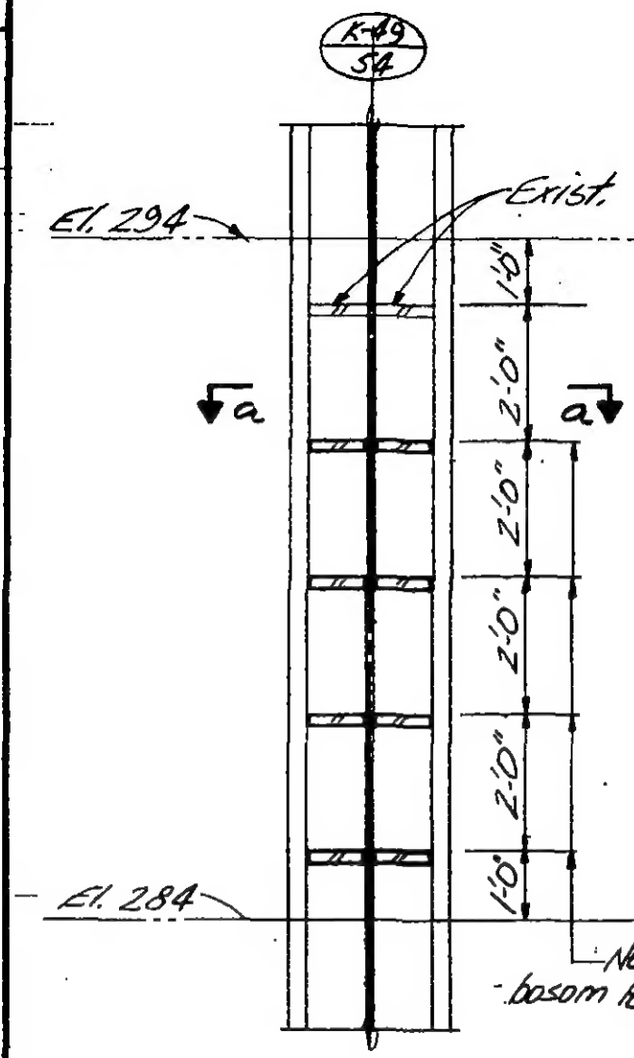

Detail A

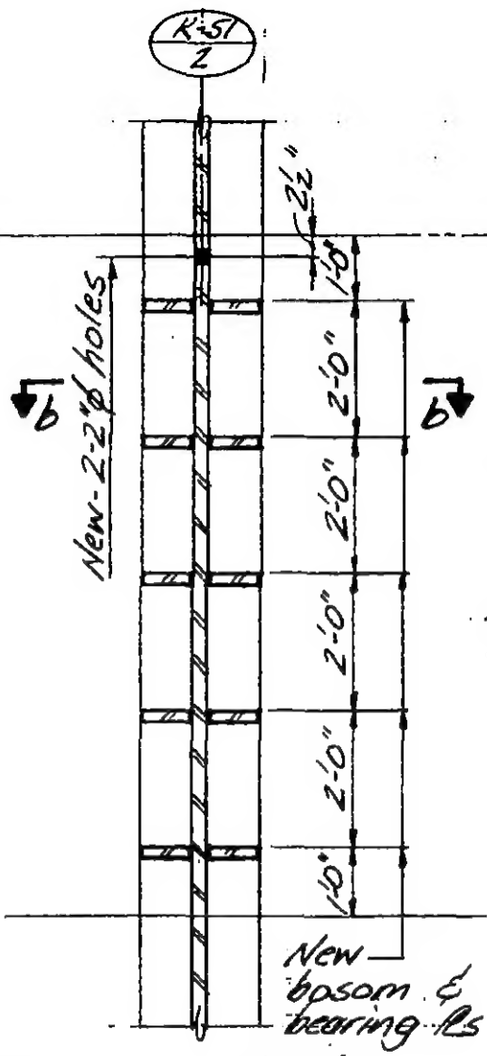

Detail B

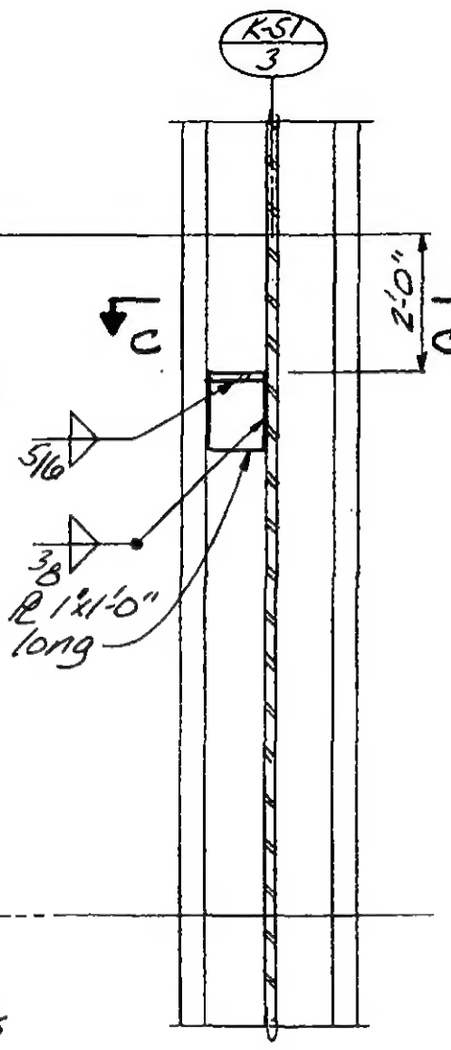

Detail C

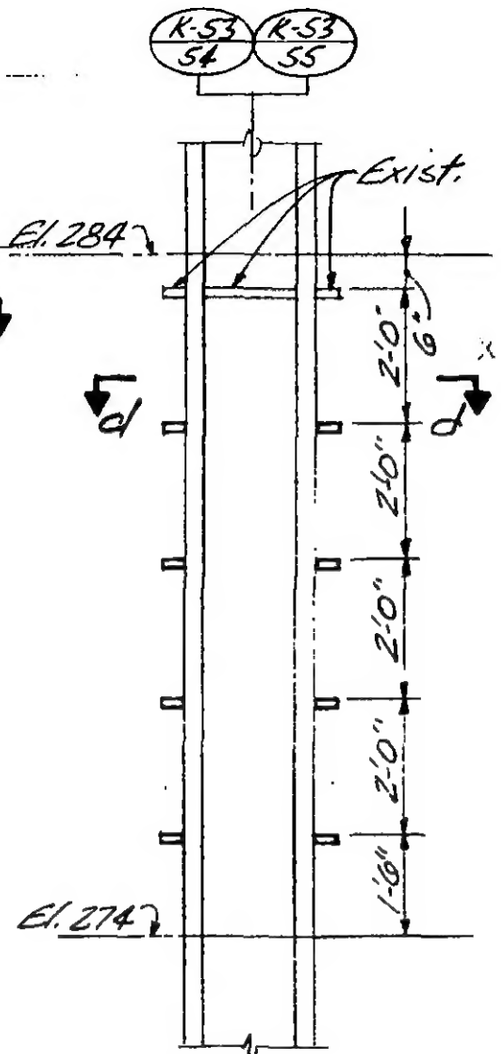

Detail D

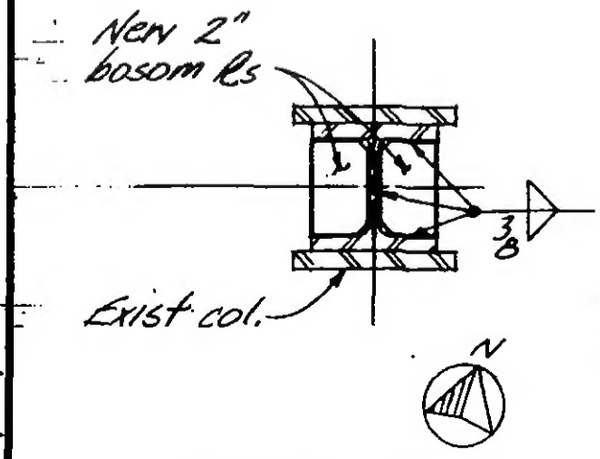

Section a-a

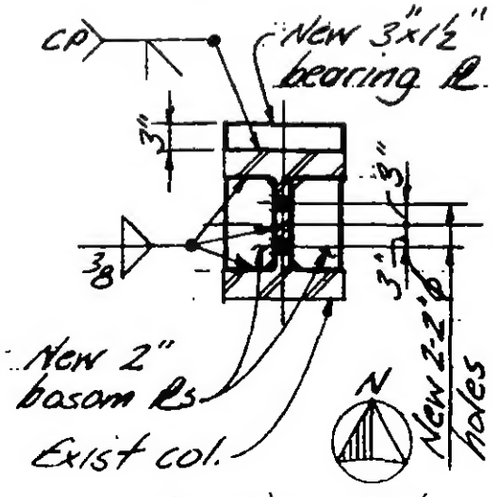

Section b-b

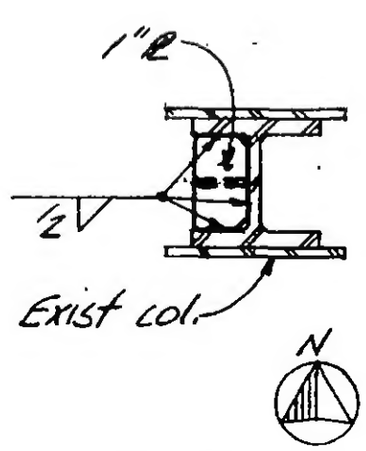

Section c-c

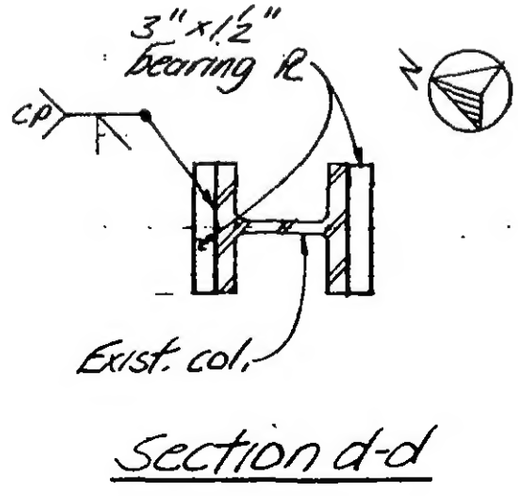

Section d-d

LICENSED PROFESSIONAL ENGINEER — LESLIE E. ROBERTSON — No. 34960 — UNIVERSITY OF THE STATE OF NEW YORK

DESIGNED

DRAWN J. Adams

REVIEWED W Brewer

19-K-1059

SKILLING, HELLE, CHRISTIANSEN, ROBERTSON — Structural & Civil Engineers

PROJECT THE WORLD TRADE CENTER | TITLE BEAM COVER PL -El. 332'-0" | DATE 1-15-72

REVISIONS

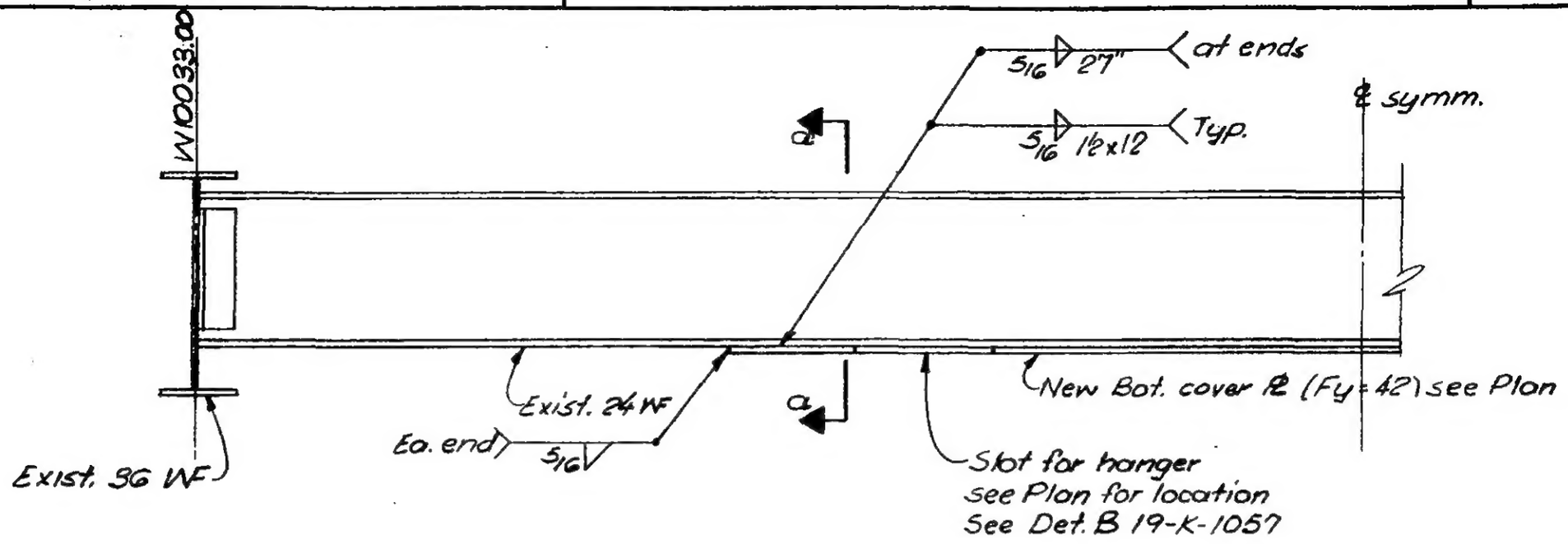

Detail A

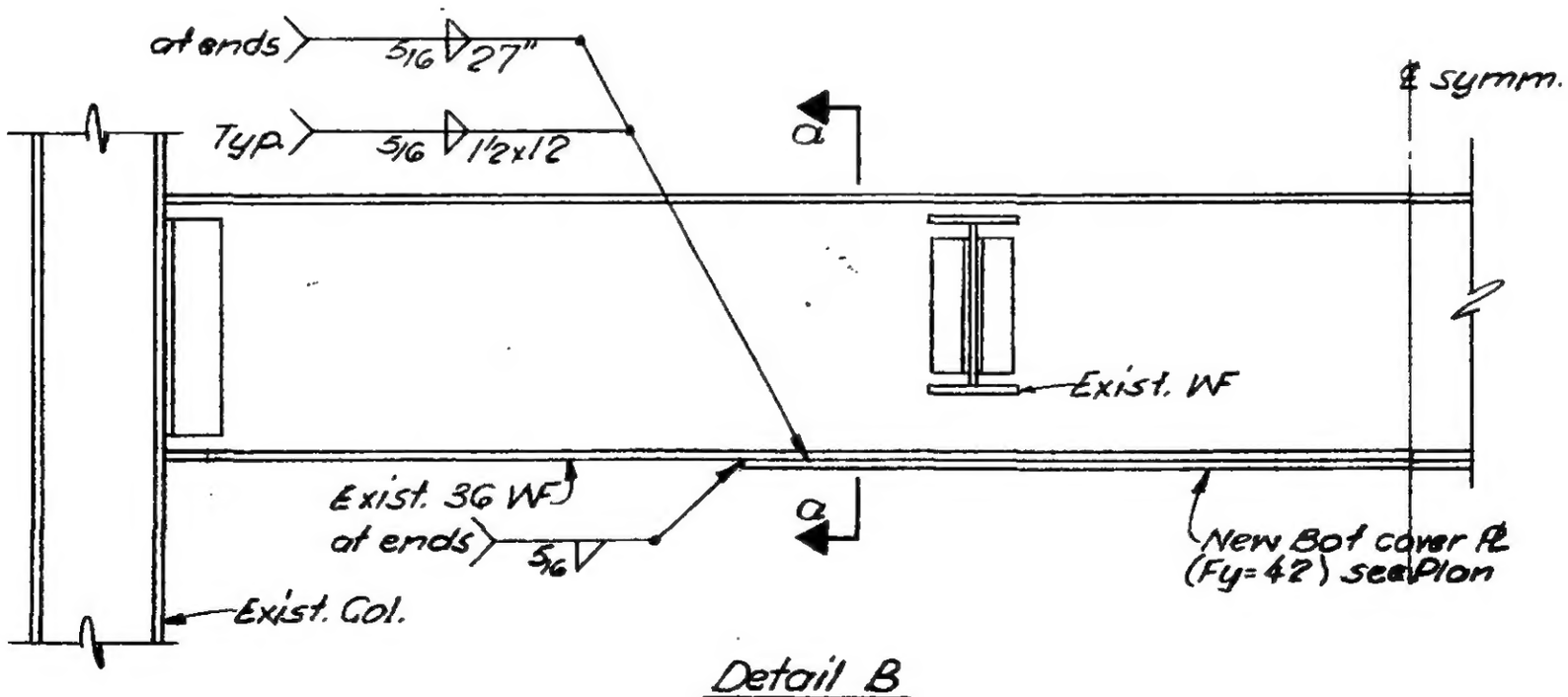

Detail B

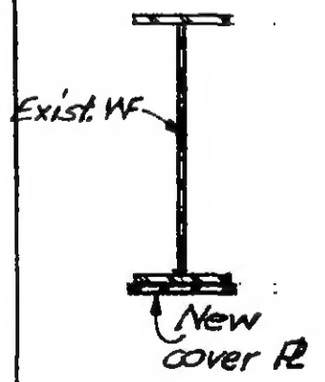

Section a-a

LICENSED PROFESSIONAL ENGINEER LESLIE E. ROBERTSON No. 34360 UNIVERSITY OF THE STATE OF NEW YORK

DESIGNED

DRAWN

REVIEWED W.D. Brewer

19-K-1060

SKILLING, HELLE, CHRISTIANSEN, ROBERTSON — Structural & Civil Engineers

PROJECT THE WORLD TRADE CENTER | TITLE NEW OPENING - ELEV. 279'-3" | DATE 2-2-72

REVISIONS

3-3-72

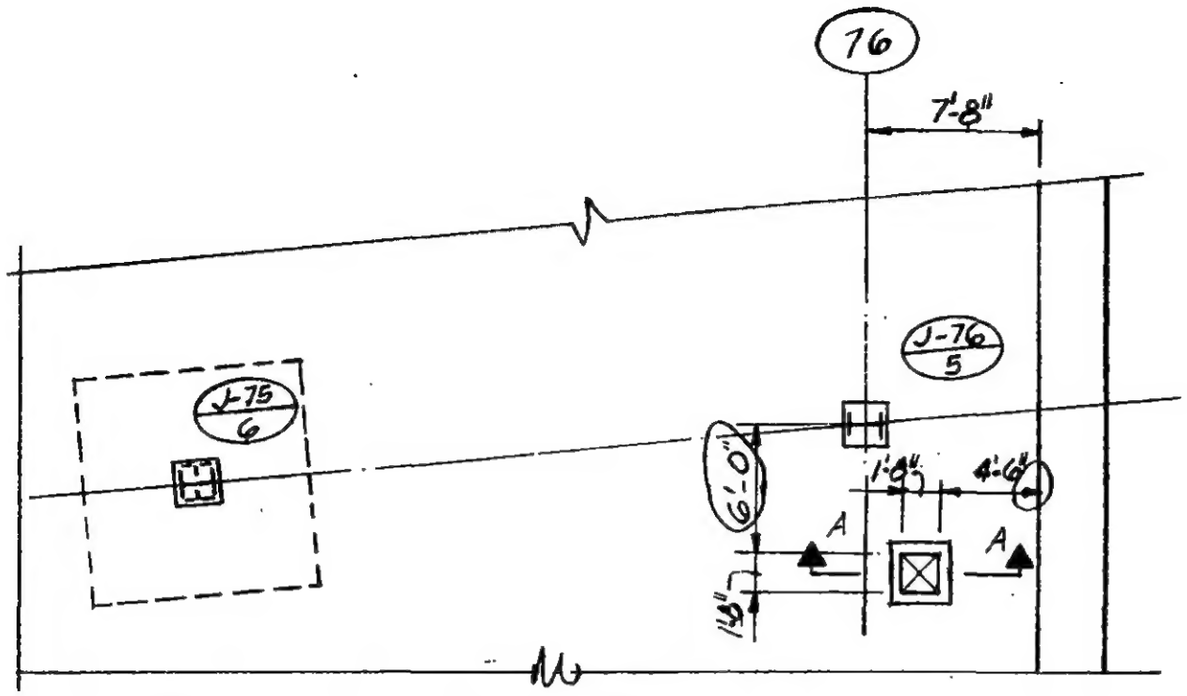

Part Plan
El. 279'-3" - SCJ-63

New opening per PNYA change No. 299.790 drawing SK-320 date 12/17/71

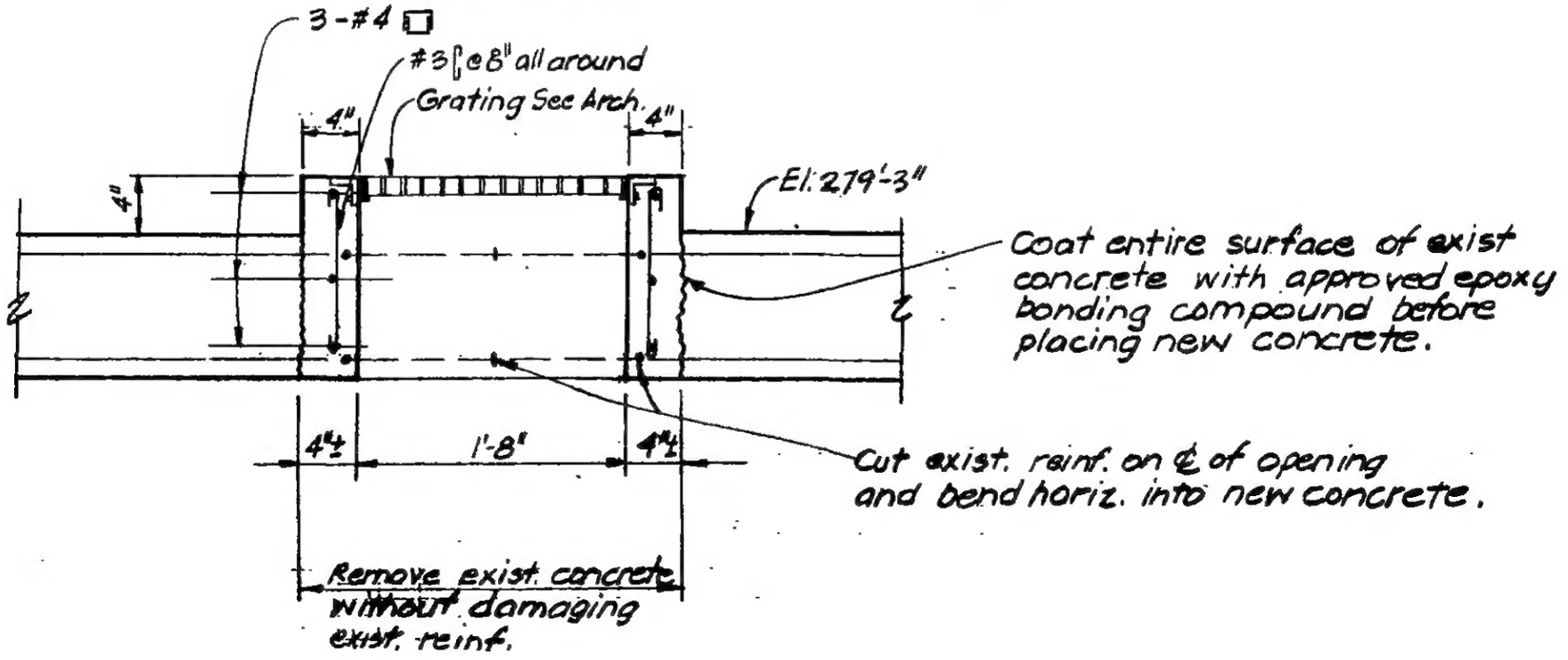

Section A-A

LICENSED PROFESSIONAL ENGINEER — LESLIE E. ROBERTSON — No. 24960 — UNIVERSITY OF THE STATE OF NEW YORK

DESIGNED

DRAWN P. Oceli

REVIEWED

19-J-1061

SKILLING, HELLE, CHRISTIANSEN, ROBERTSON — Structural & Civil Engineers

PROJECT: THE WORLD TRADE CENTER | TITLE: EL.332-ZONE K3-ELEVATORS K3, K4 & K5 | DATE: 2-11-72

REVISIONS
3-10-72

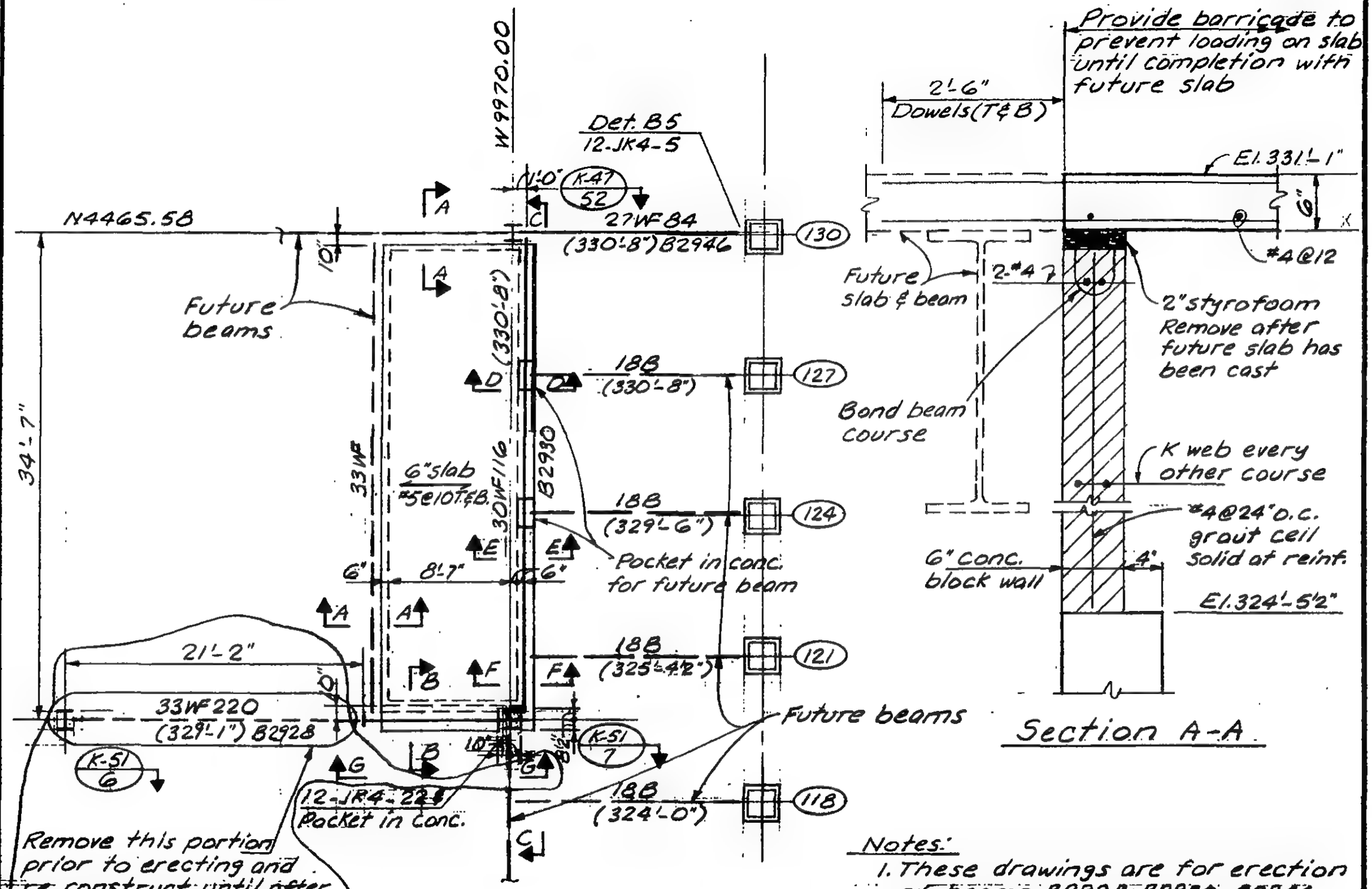

Part Plan - El. 332'

Section A-A

Notes:
1. These drawings are for erection of beams B2928, B2930, B2946 and columns (K-51/6), (K-46/7), (K-47/52) all as fabricated.
2. These drawings are released for construction of slab as shown Concrete to be fc = 3000 psi.

LICENSED PROFESSIONAL ENGINEER — LESLIE E. ROBERTSON — No. 34360 — UNIVERSITY OF THE STATE OF NEW YORK

DESIGNED: K. Chiang
DRAWN: A. FRANQUI
REVIEWED:

19-K-1062.1

SKILLING, HELLE, CHRISTIANSEN, ROBERTSON — Structural & Civil Engineers

PROJECT: THE WORLD TRADE CENTER | TITLE: EL. 332-ZONE K3-ELEVATORS K3, K4 & K5 | DATE: 2-11-72

REVISIONS

3-10-72

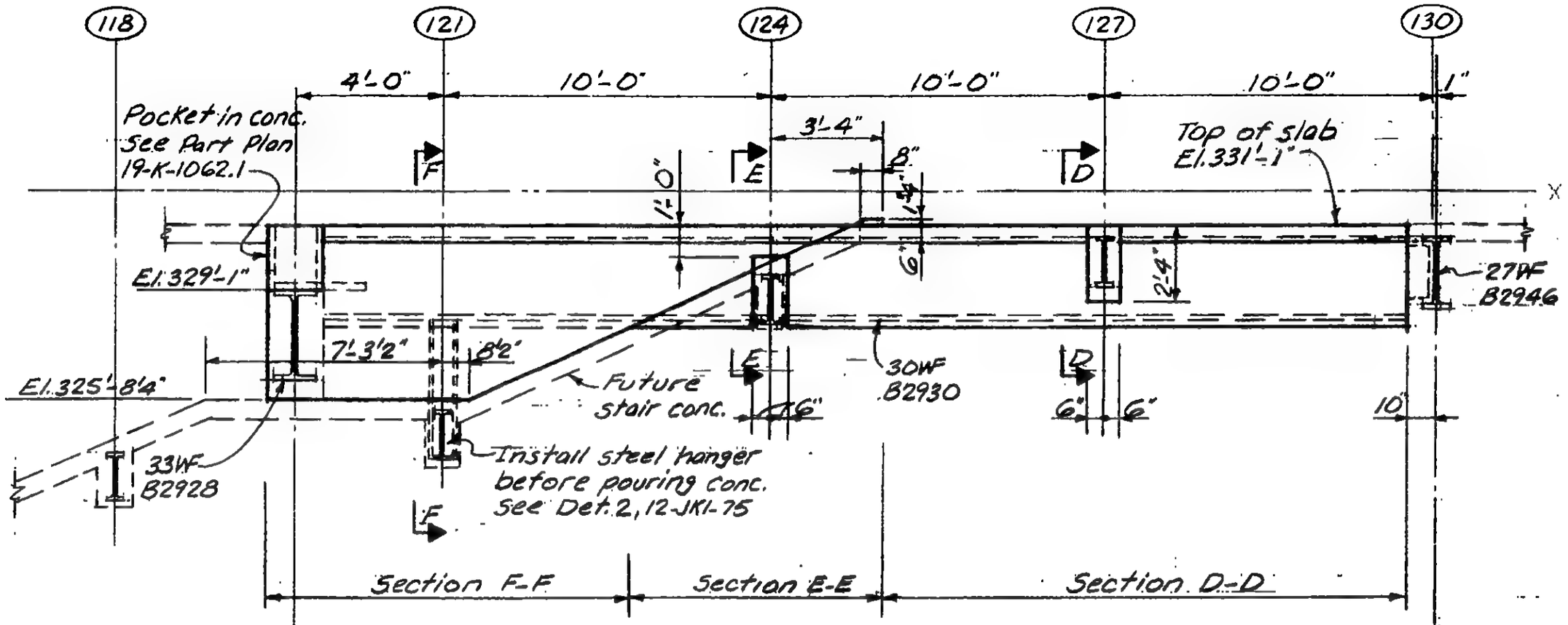

Section C-C

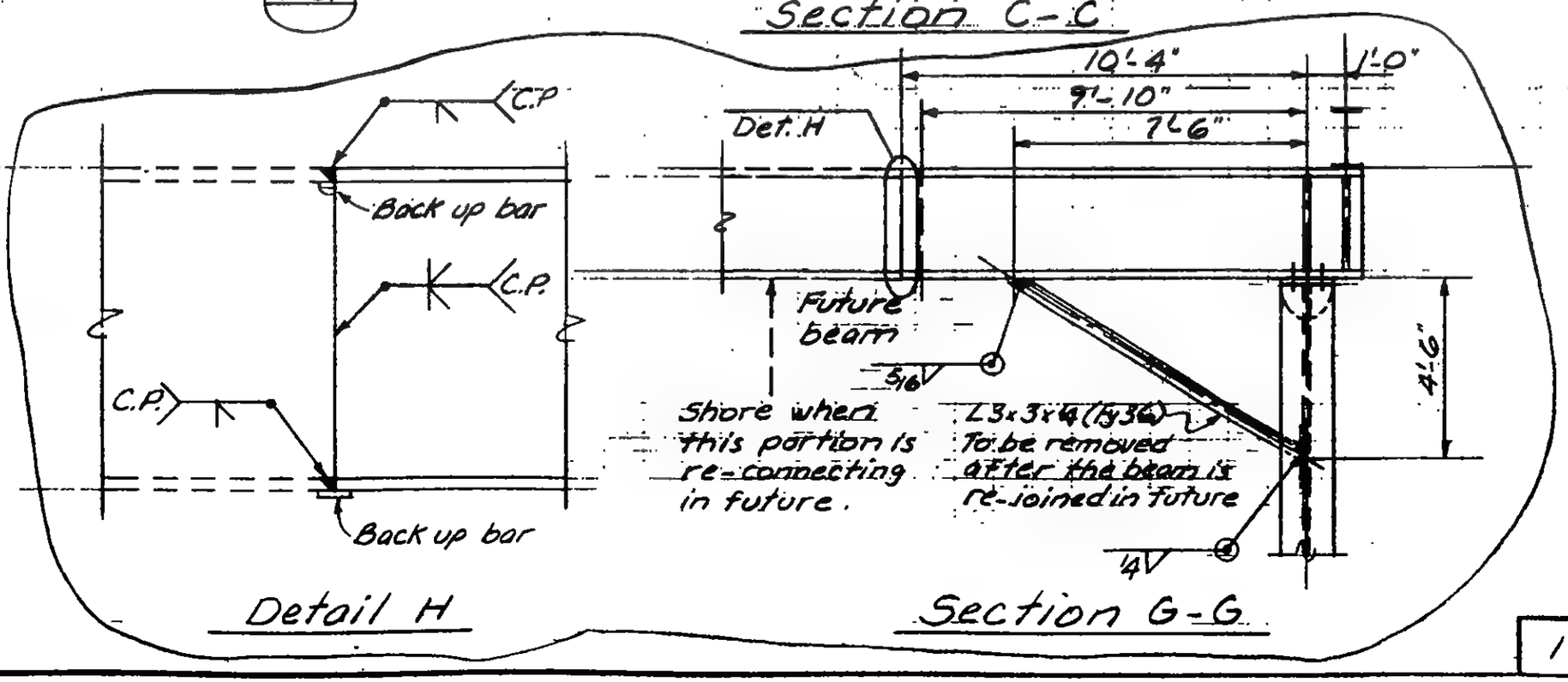

LICENSED PROFESSIONAL ENGINEER — LESLIE E. ROBERTSON — No. 34360 — UNIVERSITY OF THE STATE OF NEW YORK

DESIGNED: K. Chiang

DRAWN: A. Franqui

REVIEWED:

19-K-1062.2

SKILLING, HELLE, CHRISTIANSEN, ROBERTSON — Structural & Civil Engineers

PROJECT: THE WORLD TRADE CENTER | TITLE: EL. 332 - ZONE K3 - ELEVATORS K3, K4 & K5 | DATE: 2-11-72

REVISIONS

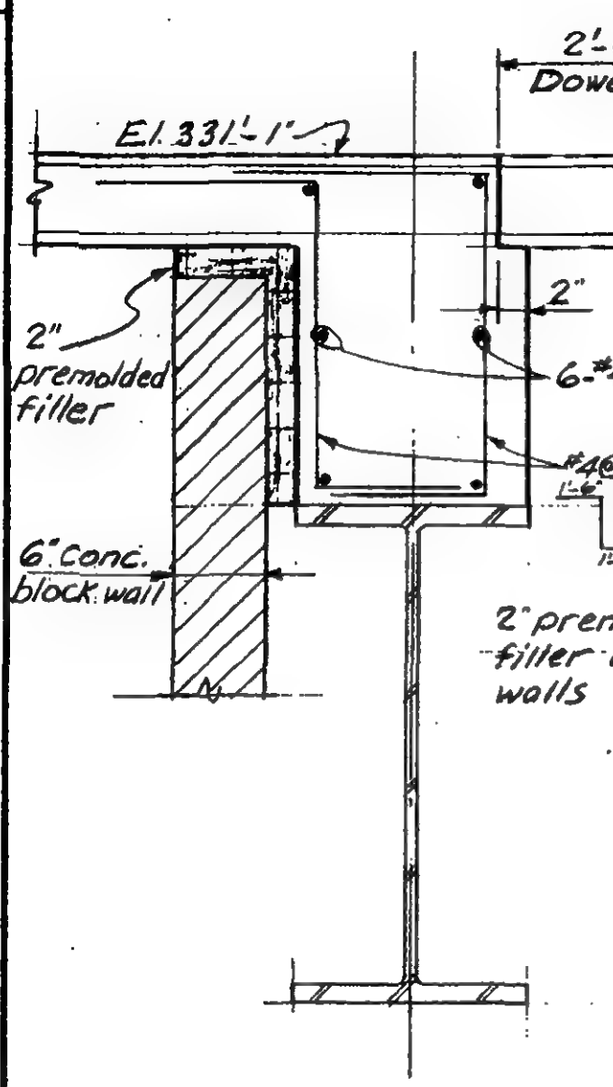

Section B-B

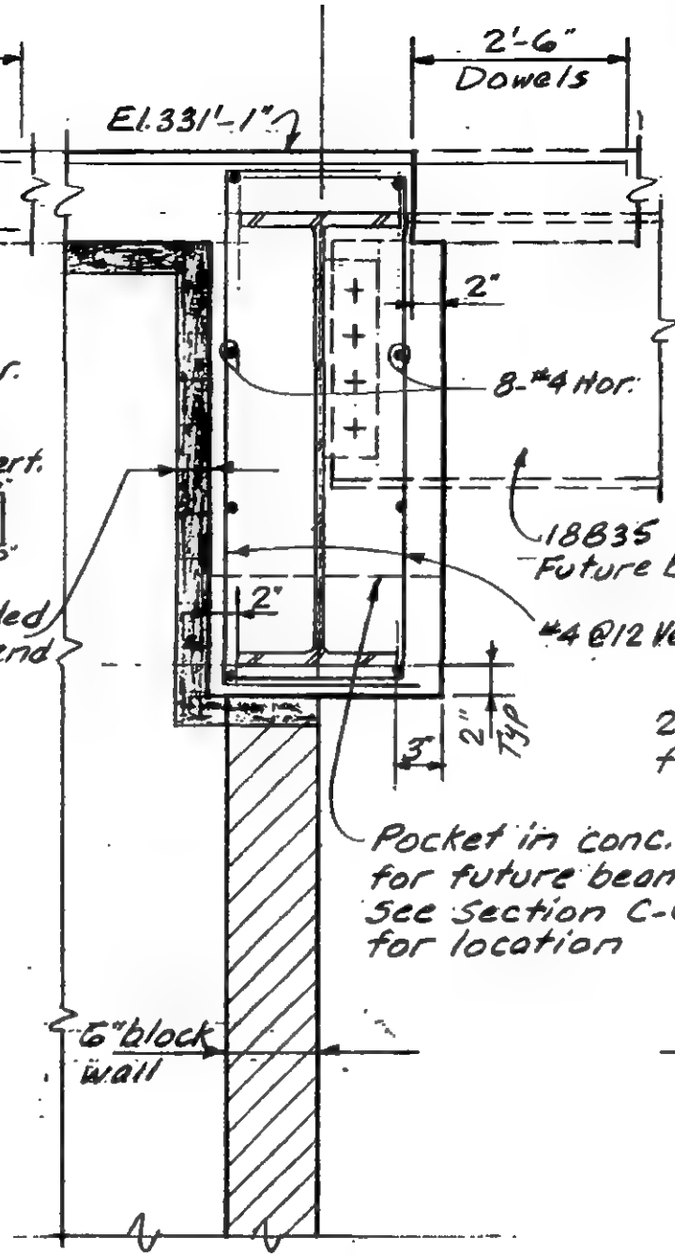

Section D-D

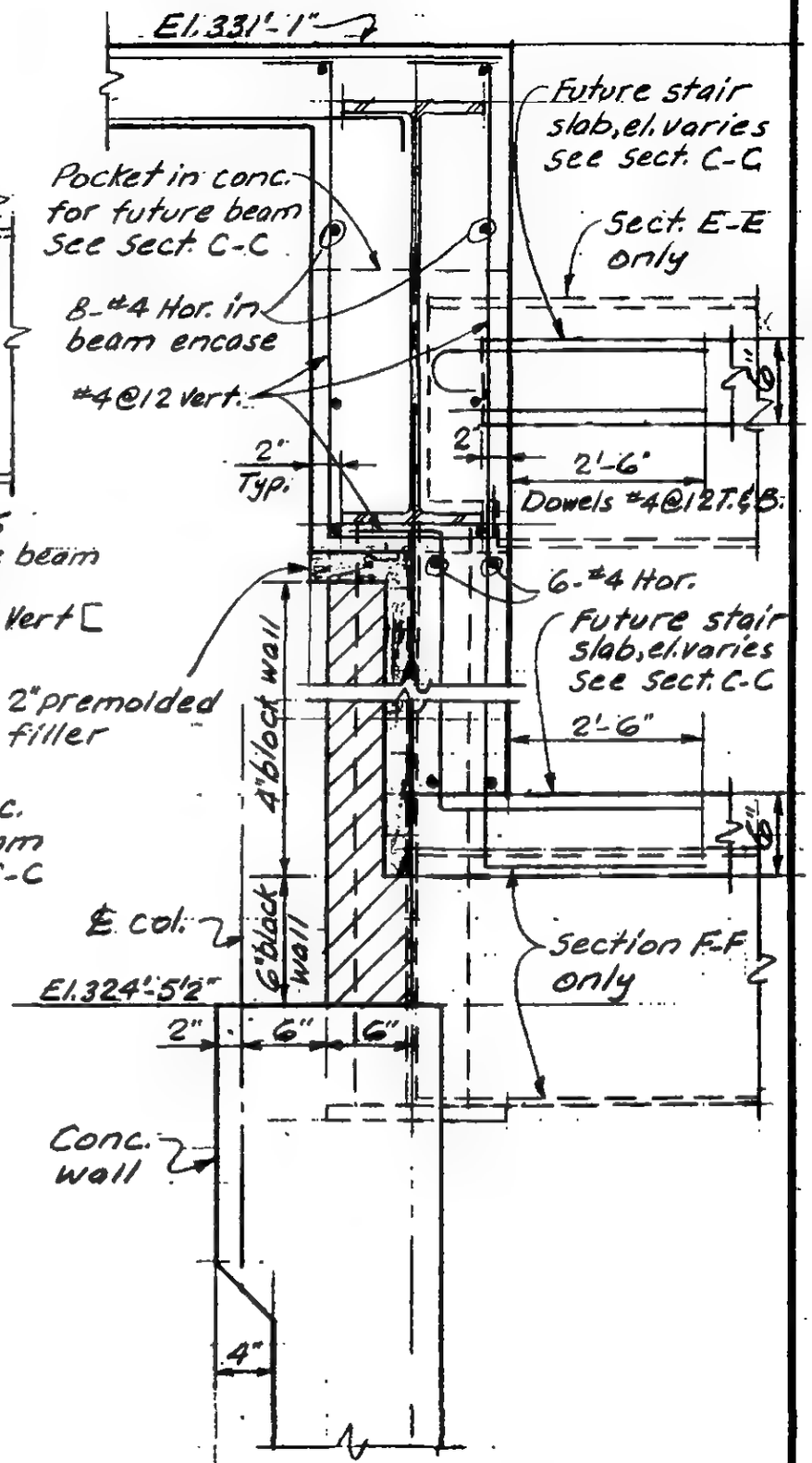

Section E-E
Section F-F

LICENSED PROFESSIONAL ENGINEER — LESLIE E. ROBERTSON — No. 34360 — UNIVERSITY OF THE STATE OF NEW YORK

DESIGNED: K. Chiang
DRAWN: A. Franqui
REVIEWED:

19-K-1062.3

SKILLING, HELLE, CHRISTIANSEN, ROBERTSON — Structural & Civil Engineers

PROJECT: THE WORLD TRADE CENTER | TITLE: TEMPORARY PLANKED AREA - EL. 332'- ZONE K-1 | DATE: 2-16-72

REVISIONS

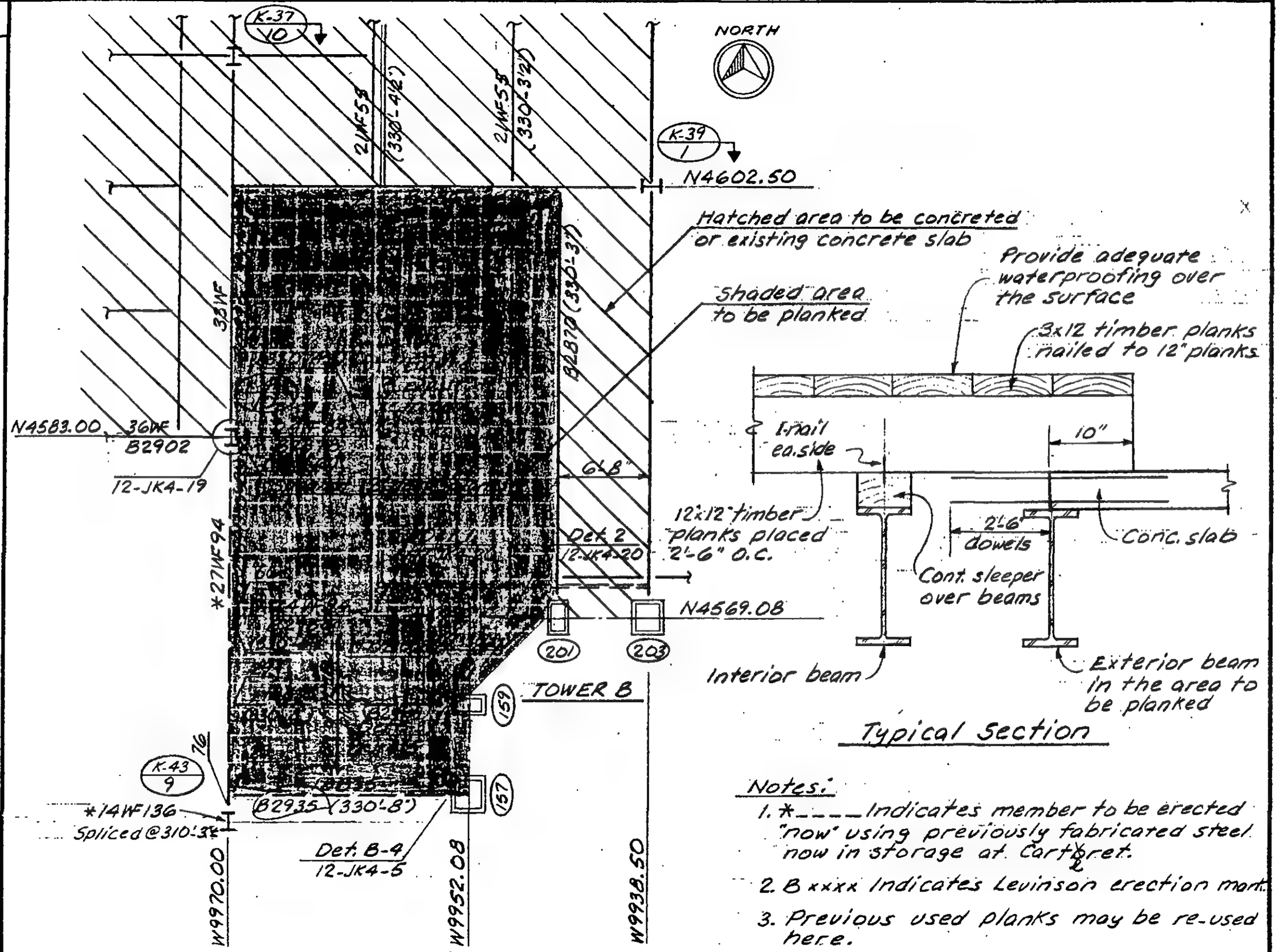

Notes:

1. *____ Indicates member to be erected "now" using previously fabricated steel now in storage at Cartaret.
2. B xxxx Indicates Levinson erection mark.
3. Previous used planks may be re-used here.

LICENSED PROFESSIONAL ENGINEER — LESLIE E. ROBERTSON — No 34360 — UNIVERSITY OF THE STATE OF NEW YORK

DESIGNED: K. Chiang
DRAWN: A. Frangui
REVIEWED:

19-K-1063

SKILLING, HELLE, CHRISTIANSEN, ROBERTSON — Structural & Civil Engineers

PROJECT: THE WORLD TRADE CENTER | TITLE: PATH - NEW STAIR | DATE: 2-25-72

REVISIONS

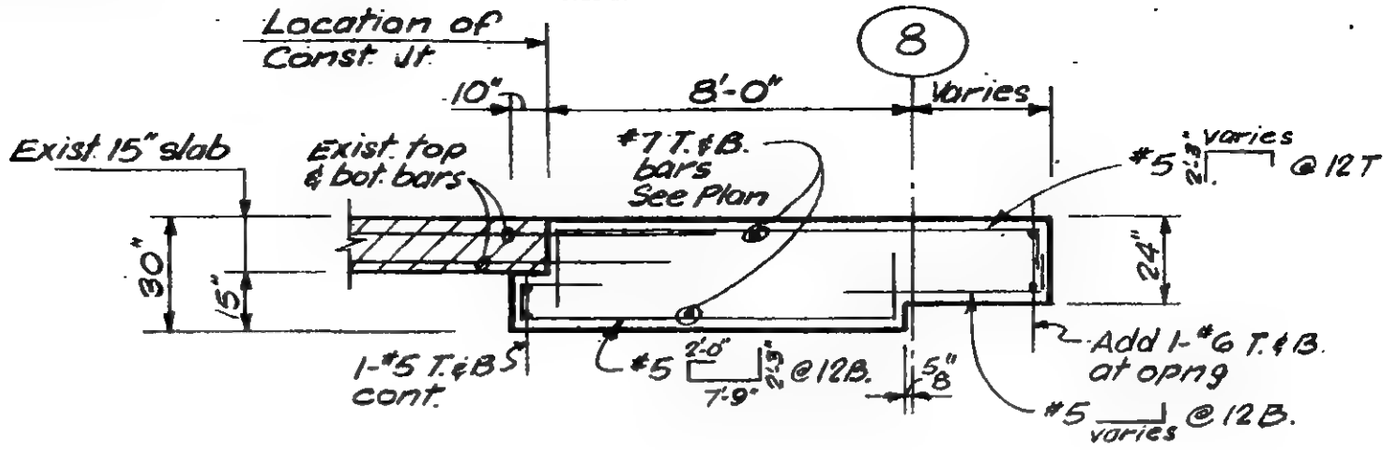

Section A-A

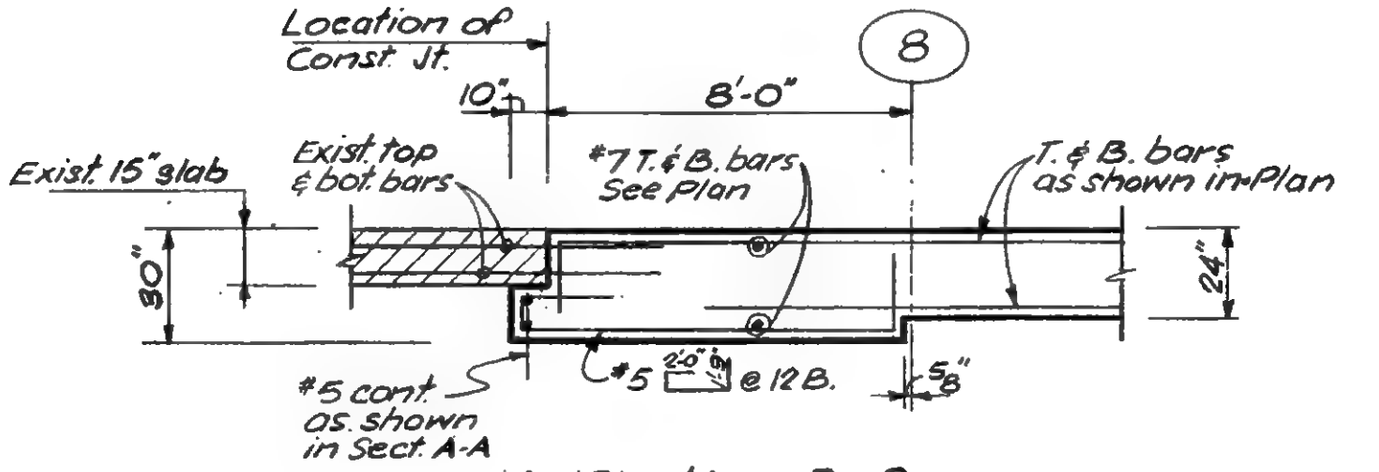

Section B-B

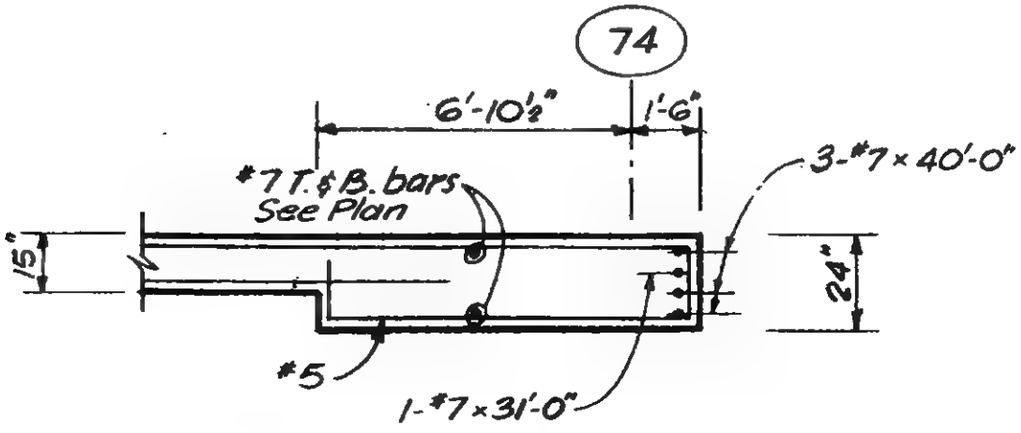

Section C-C

LICENSED PROFESSIONAL ENGINEER — LESLIE E. ROBERTSON — No. 34960 — UNIVERSITY OF THE STATE OF NEW YORK

DESIGNED: ETL
DRAWN: SC
REVIEWED:

19-J-1064.1

SKILLING, HELLE, CHRISTIANSEN, ROBERTSON — Structural & Civil Engineers

PROJECT: THE WORLD TRADE CENTER | TITLE: PATH - NEW STAIR | DATE: 2-25-72

REVISIONS

3-16-72

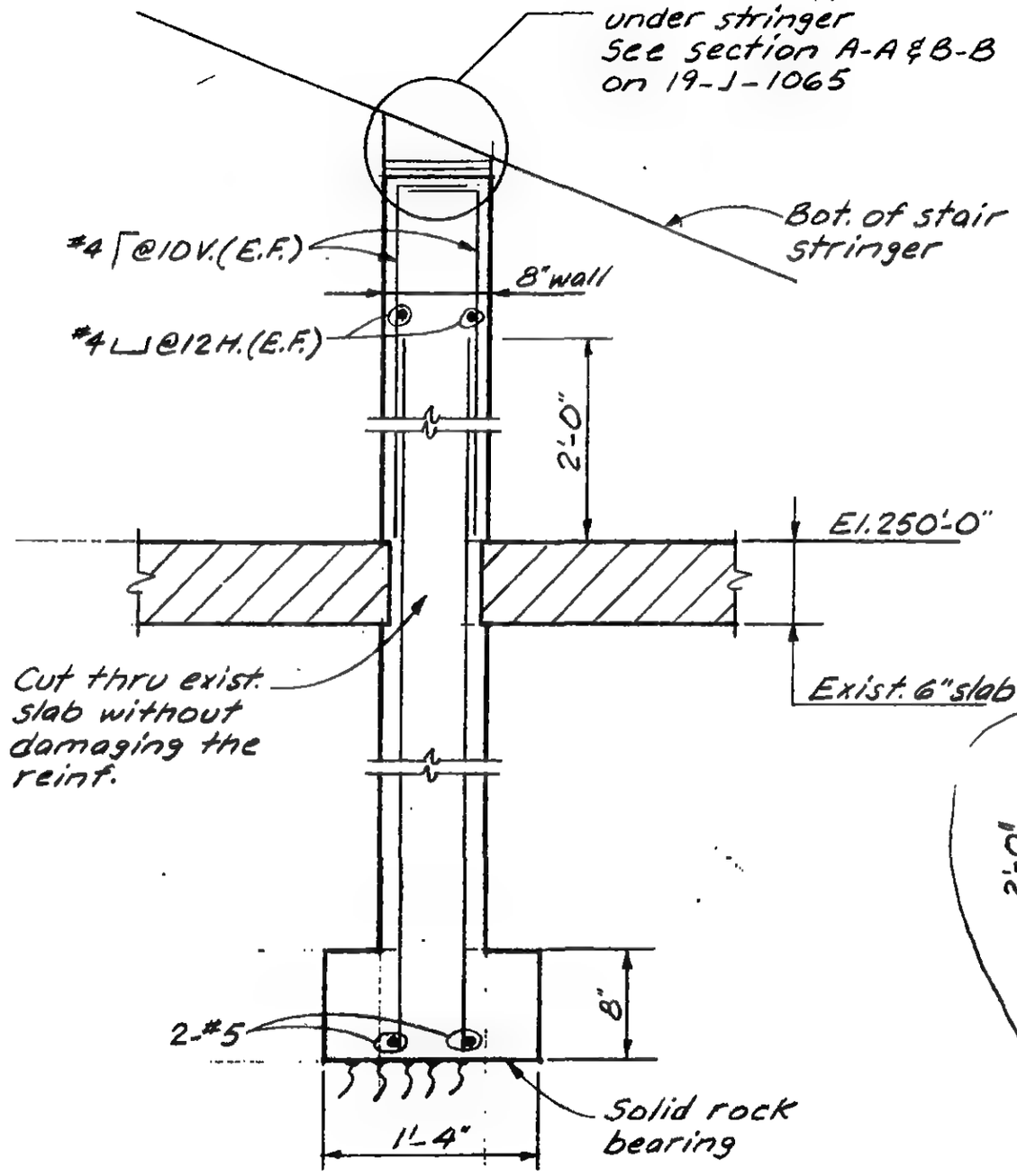

Section D-D

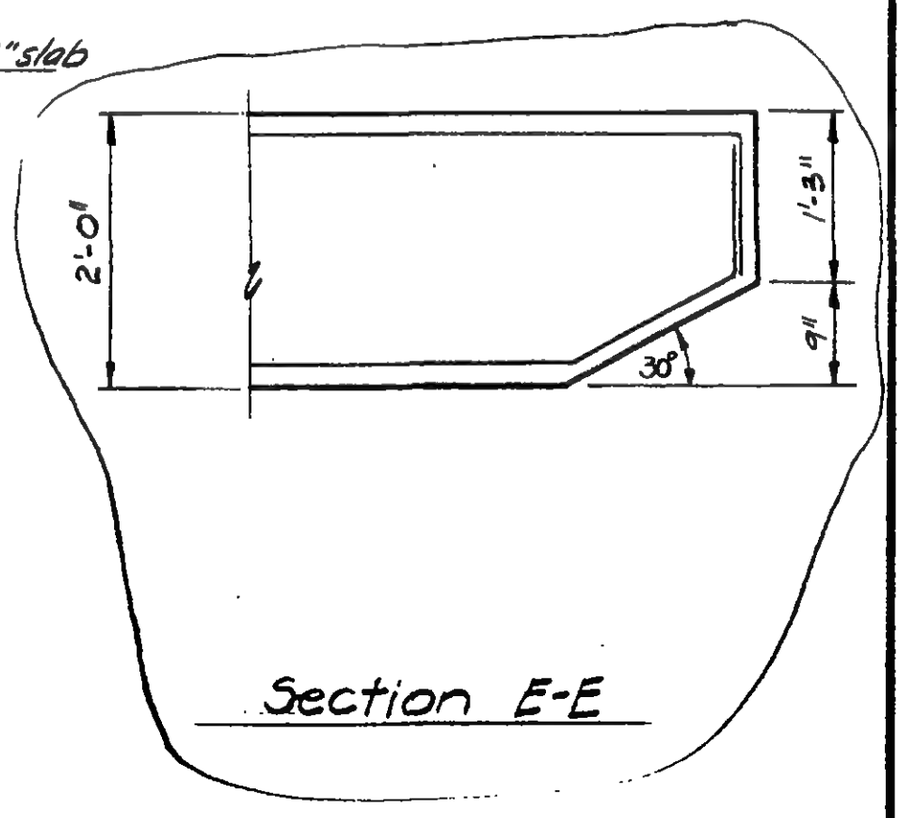

Section E-E

LICENSED PROFESSIONAL ENGINEER — LESLIE E. ROBERTSON — No 34360 — UNIVERSITY OF THE STATE OF NEW YORK

DESIGNED E.T.L.

DRAWN A.F.

REVIEWED

19-J-1064.2

SKILLING, HELLE, CHRISTIANSEN, ROBERTSON — Structural & Civil Engineers

PROJECT: THE WORLD TRADE CENTER | TITLE: PATH - NEW STAIR P-14 | DATE: 2-25-72

REVISIONS

9-4-73

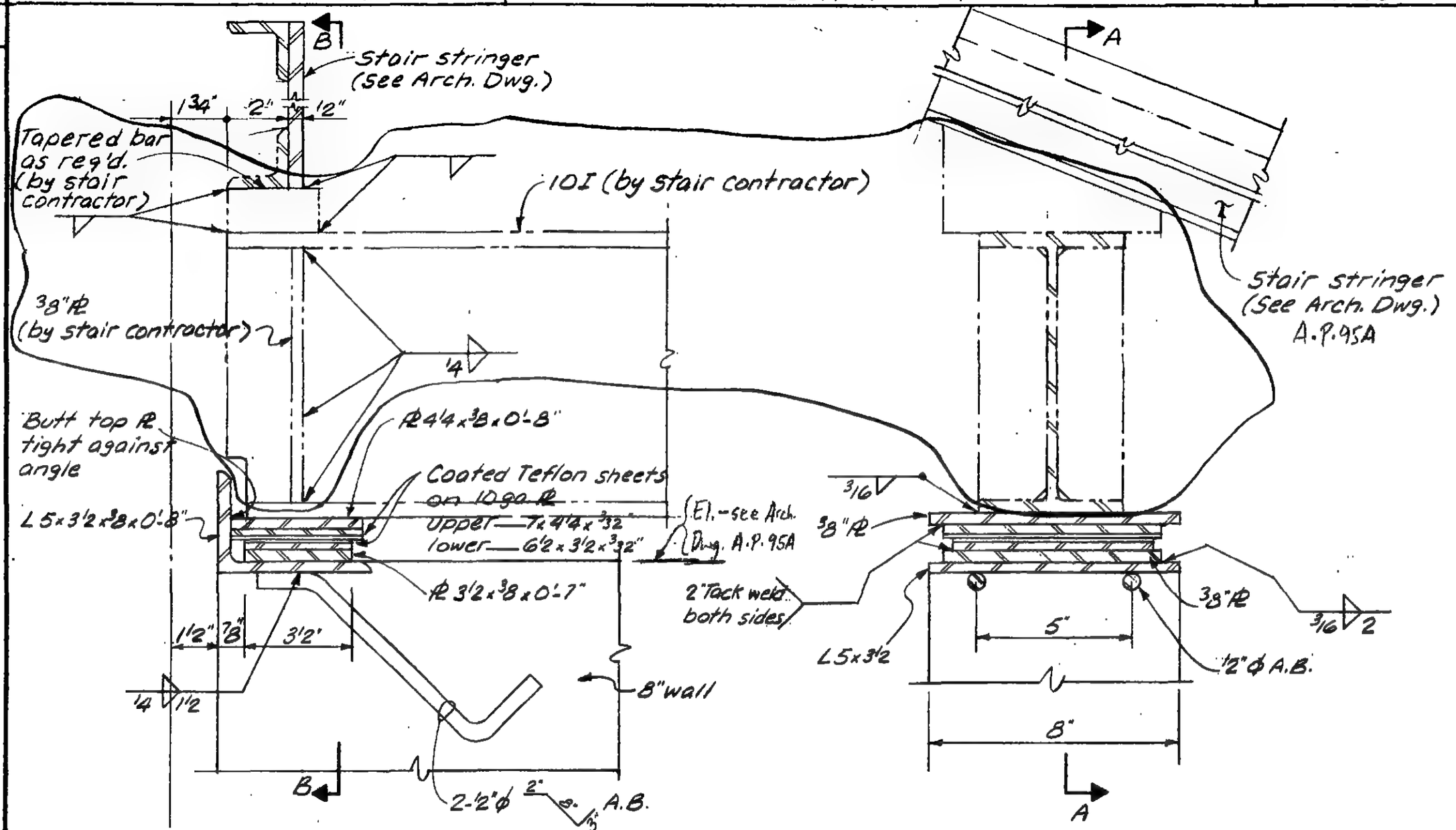

Section A-A

Section B-B

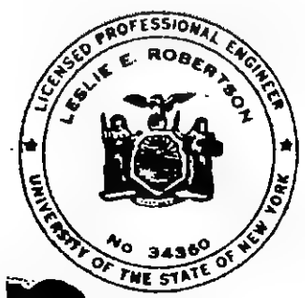

DESIGNED E.T.L.

DRAWN A.F.

REVIEWED

3" = 1'-0"

19-J-1065

SKILLING, HELLE, CHRISTIANSEN, ROBERTSON — Structural & Civil Engineers

PROJECT: THE WORLD TRADE CENTER | TITLE: PATH - NEW STAIR | DATE: 2-25-72

REVISIONS

9-4-73

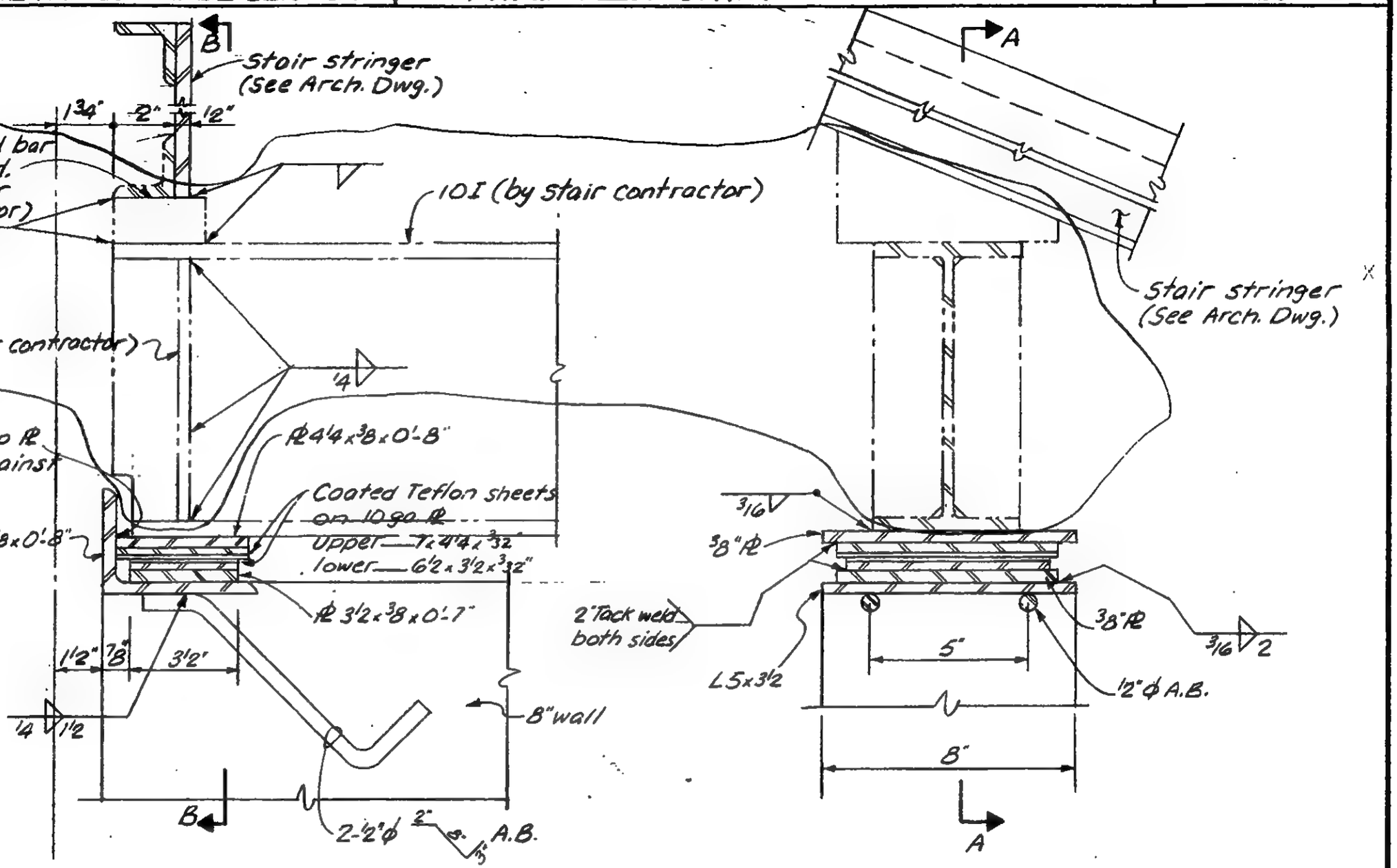

Section A-A

Section B-B

LICENSED PROFESSIONAL ENGINEER — LESLIE E. ROBERTSON — No. 34360 — UNIVERSITY OF THE STATE OF NEW YORK

DESIGNED: E.T.L.

DRAWN: A.F.

REVIEWED

3" = 1'-0"

19-J-1065

SKILLING, HELLE, CHRISTIANSEN, ROBERTSON — Structural & Civil Engineers

PROJECT: THE WORLD TRADE CENTER | TITLE: DETAIL OF WALL REPAIR IN FAN ROOM #1 | DATE: 3-7-72

REVISIONS

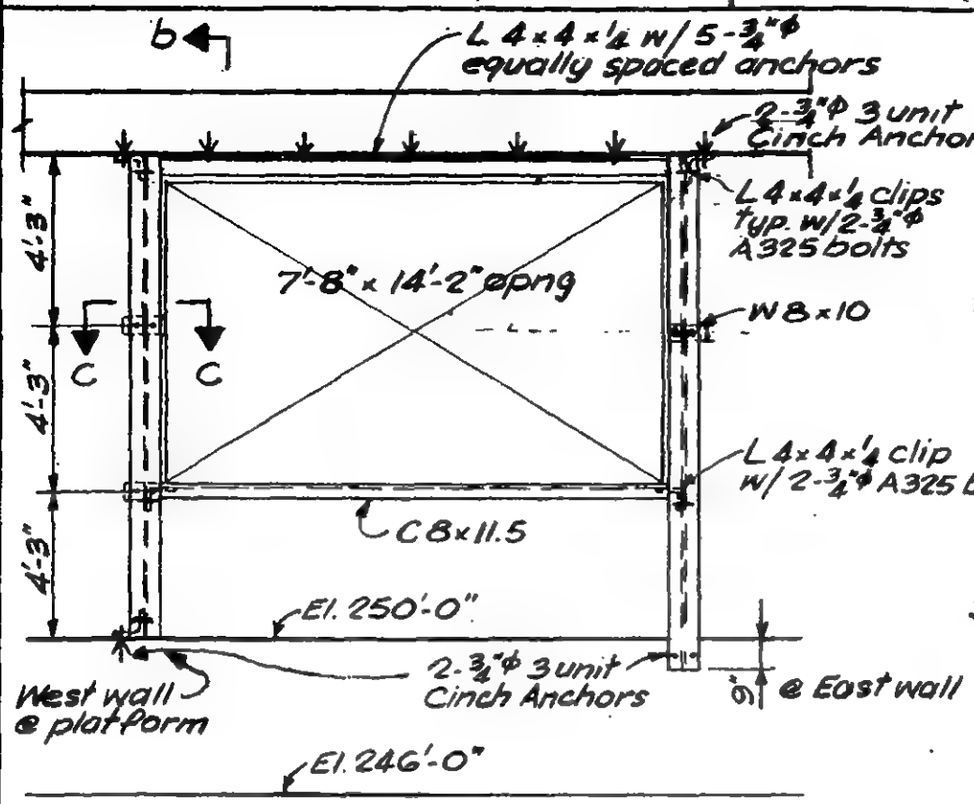

b — Section a-a

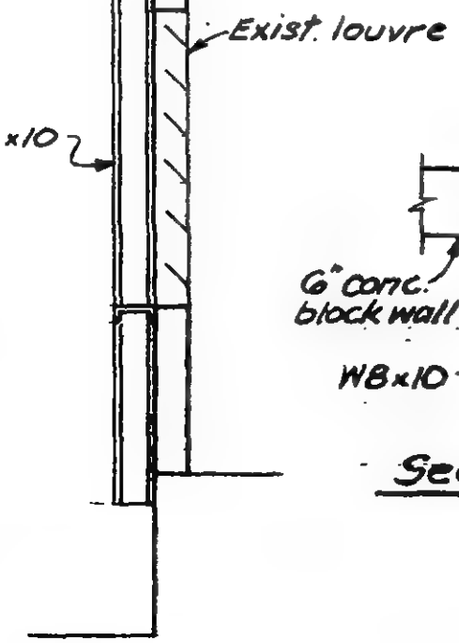

Section b-b

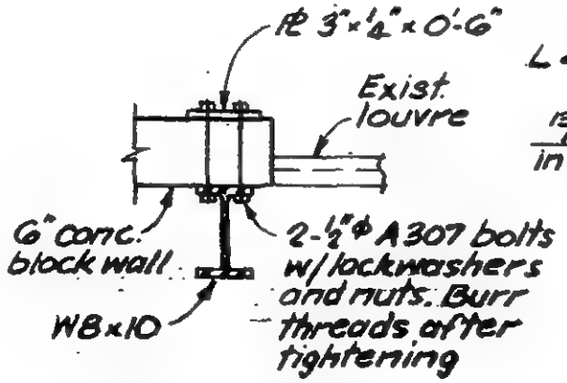

Section C-C

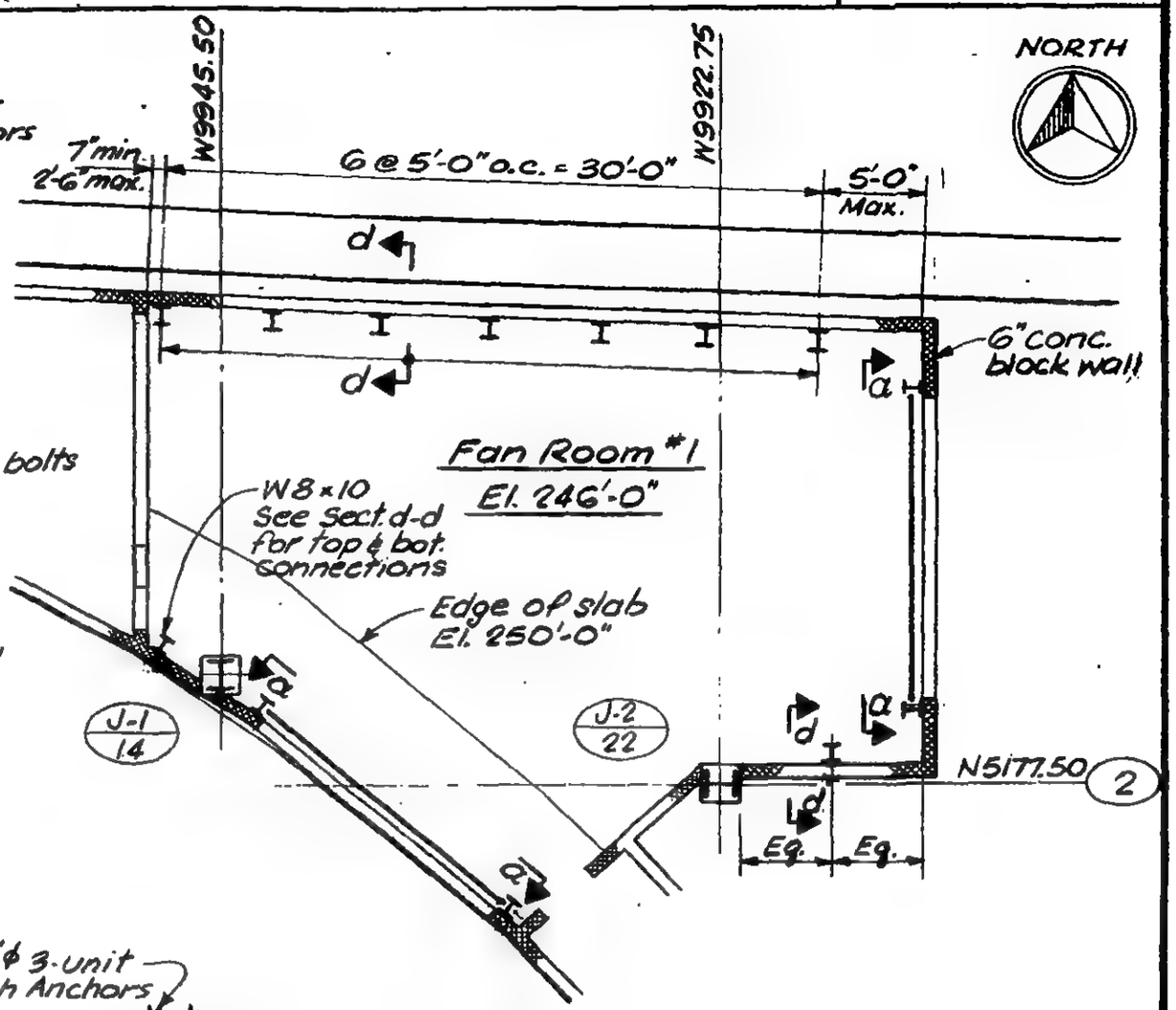

PART PLAN

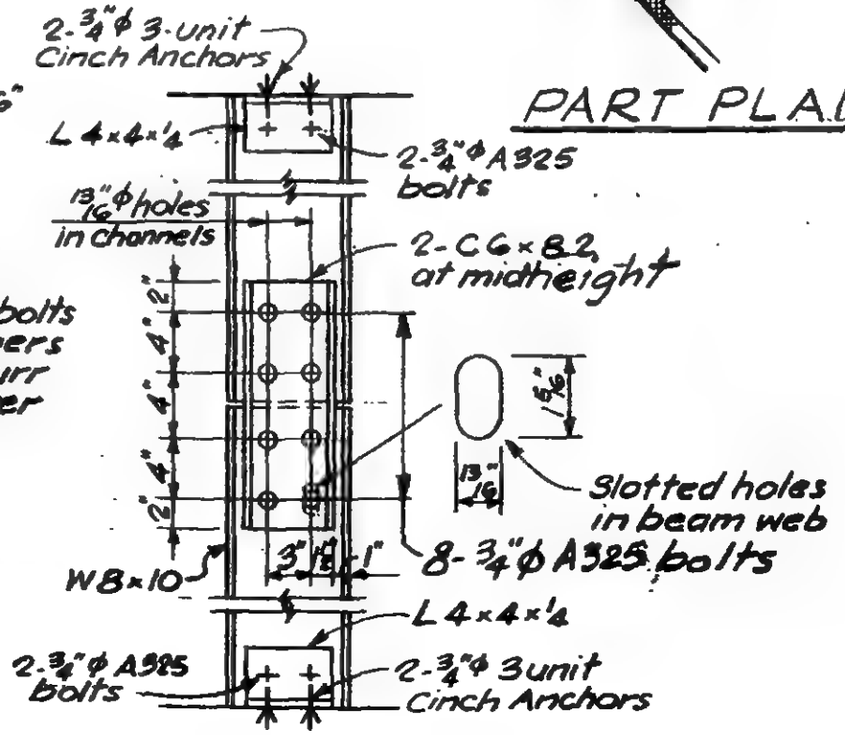

Section d-d

LICENSED PROFESSIONAL ENGINEER — LESLIE E. ROBERTSON — No. 34360 — UNIVERSITY OF THE STATE OF NEW YORK

DESIGNED: EJW
DRAWN: SC
REVIEWED: WAB

19-J-10GC

SKILLING, HELLE, CHRISTIANSEN, ROBERTSON — Structural & Civil Engineers

PROJECT: THE WORLD TRADE CENTER | TITLE: PARKING ELEVATOR - ZONE K3 - EL. 310 | DATE: 3-10-72

REVISIONS

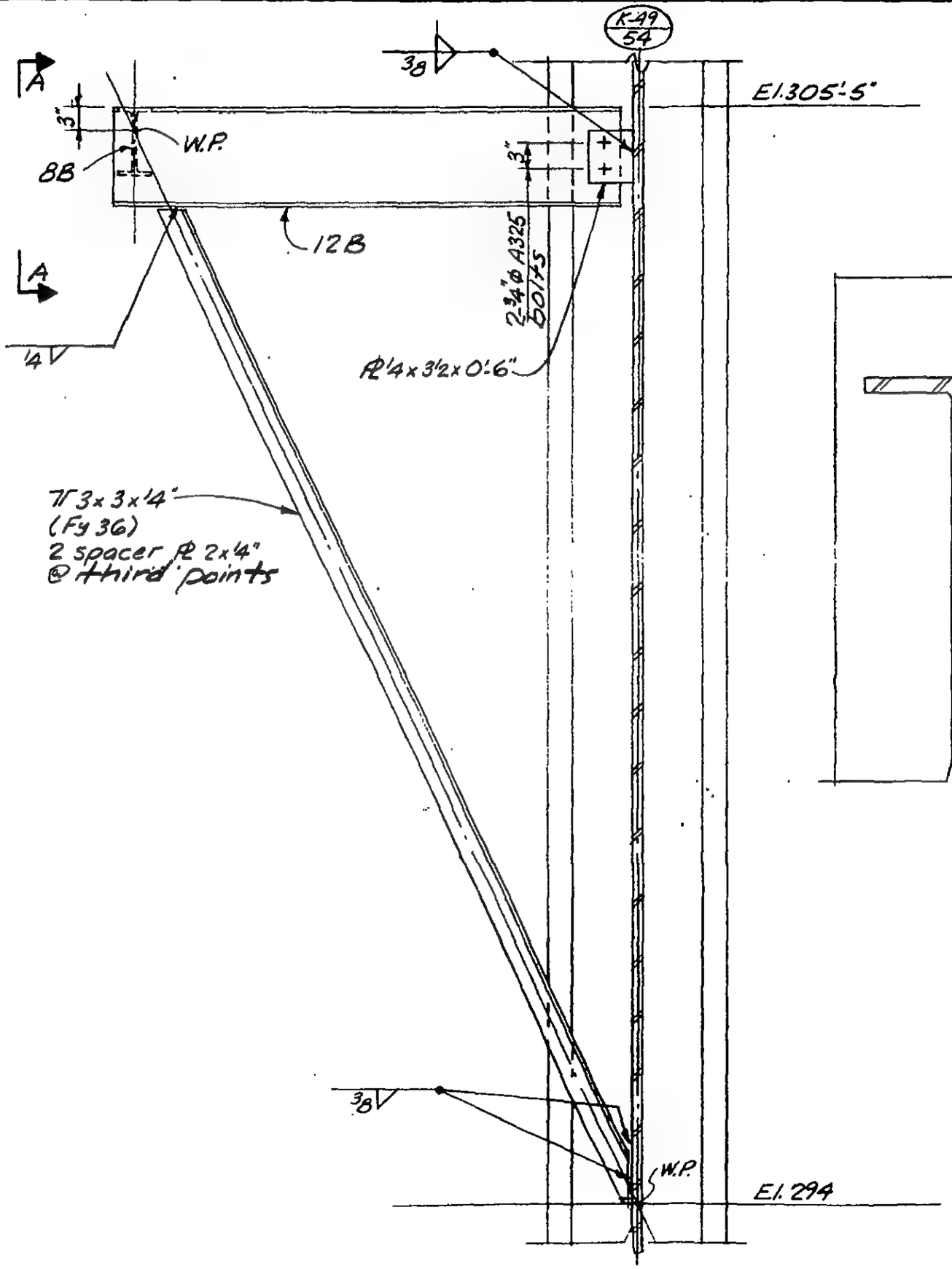

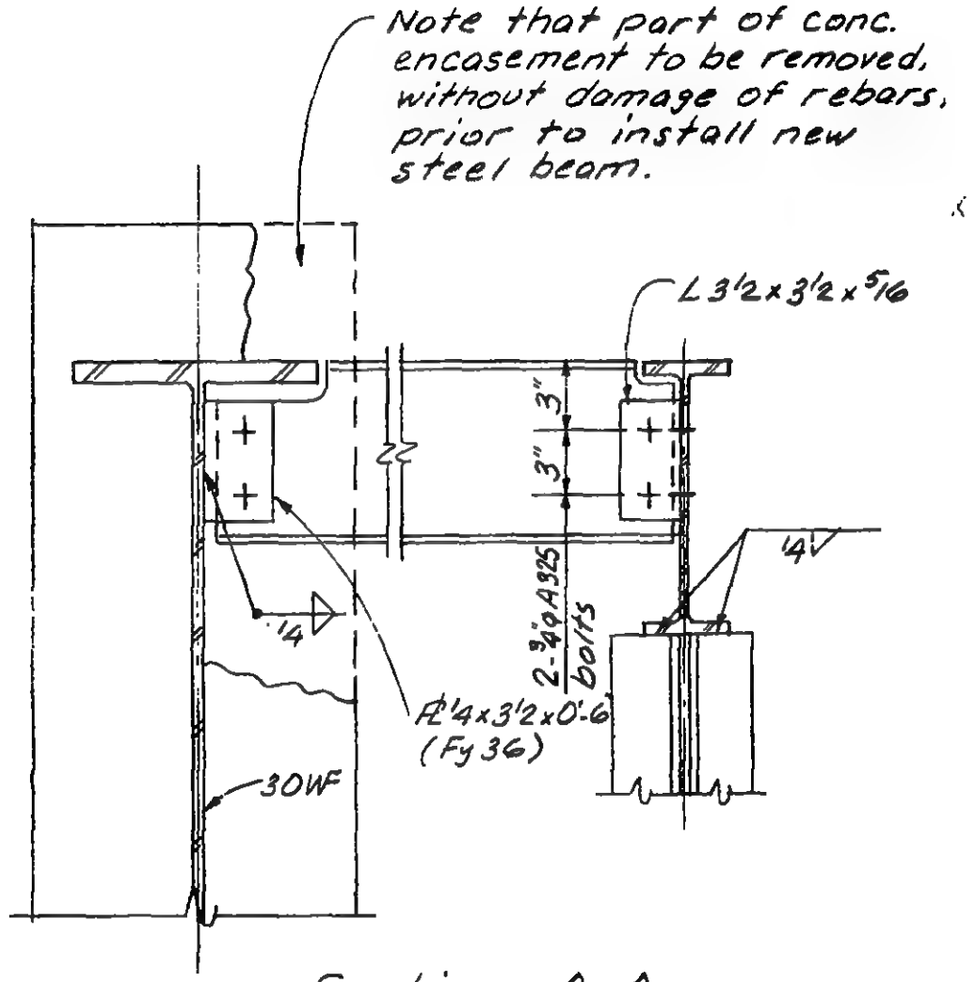

Section A-A

LICENSED PROFESSIONAL ENGINEER — LESLIE E. ROBERTSON — No. 34360 — UNIVERSITY OF THE STATE OF NEW YORK

DESIGNED: K. Chiang

DRAWN: A. Franqui

REVIEWED: [illegible]

19-K-1067

SKILLING, HELLE, CHRISTIANSEN, ROBERTSON — Structural & Civil Engineers

PROJECT: THE WORLD TRADE CENTER

TITLE: NEW SLAB OPENINGS ZONE K1-EL.274

DATE: 5-4-72

REVISIONS

6-23-72

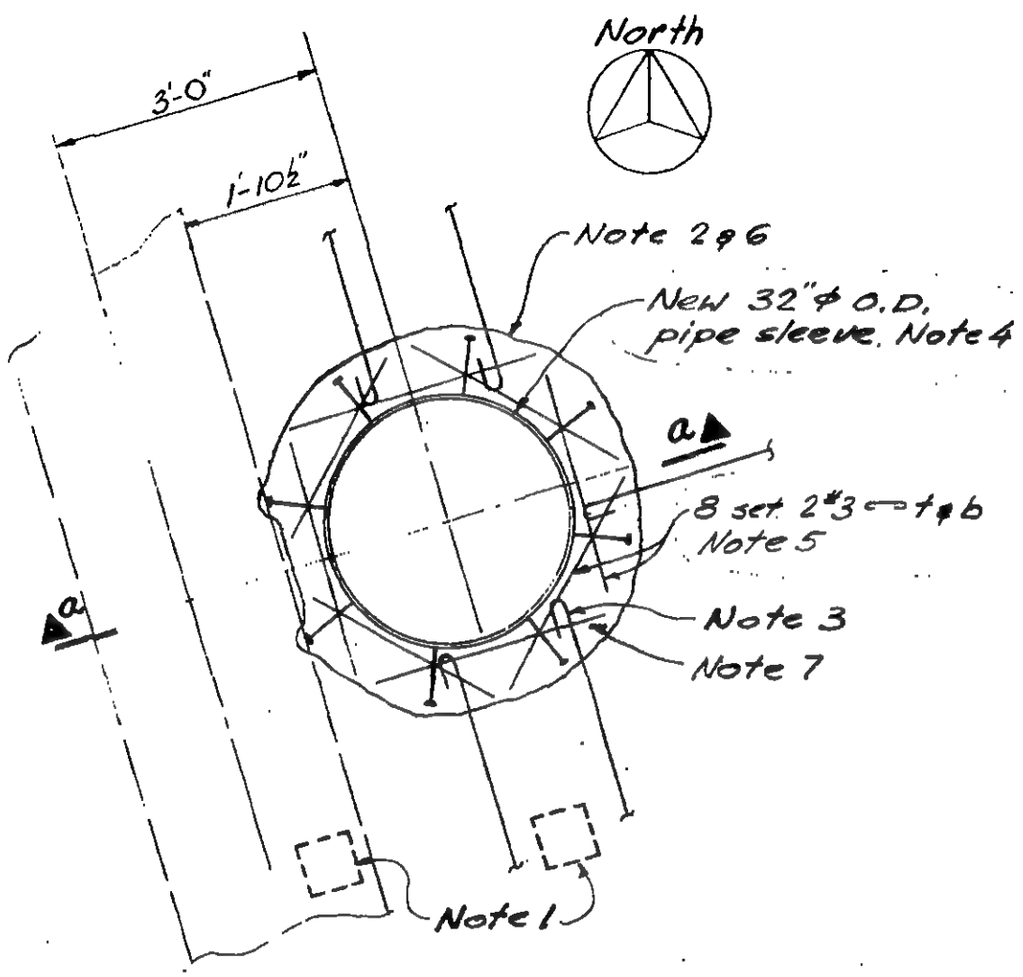

Part Plan

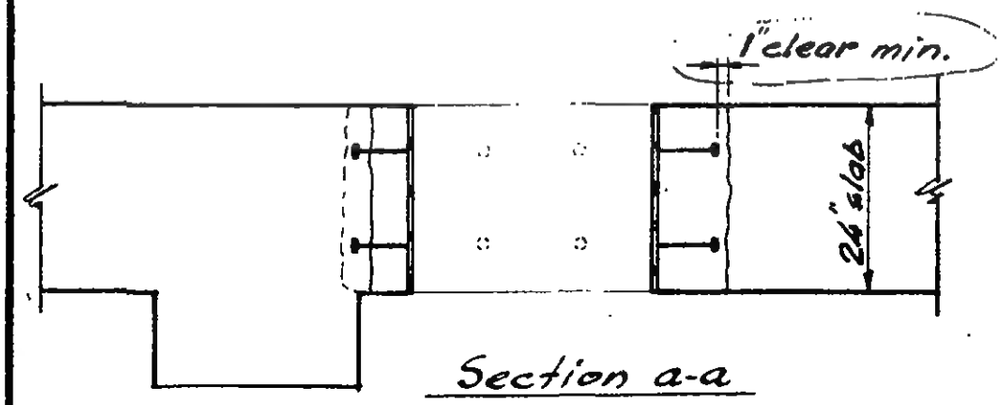

Section a-a

Detail "A"

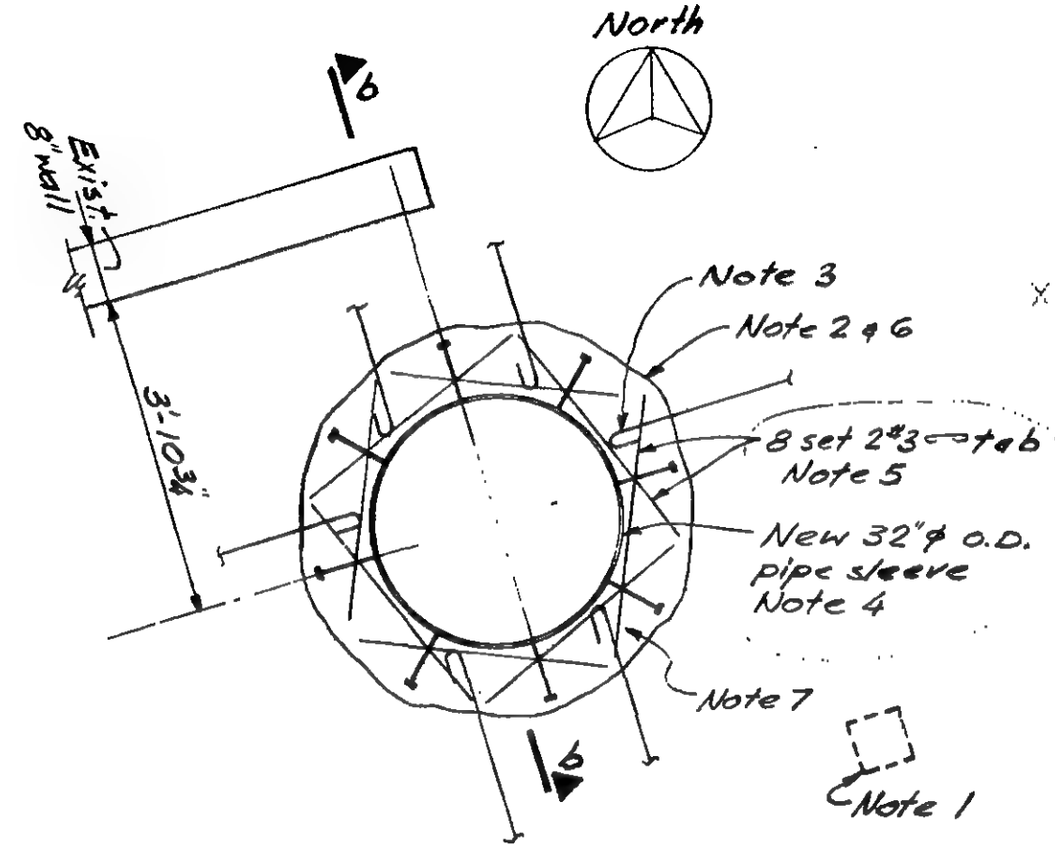

Part Plan

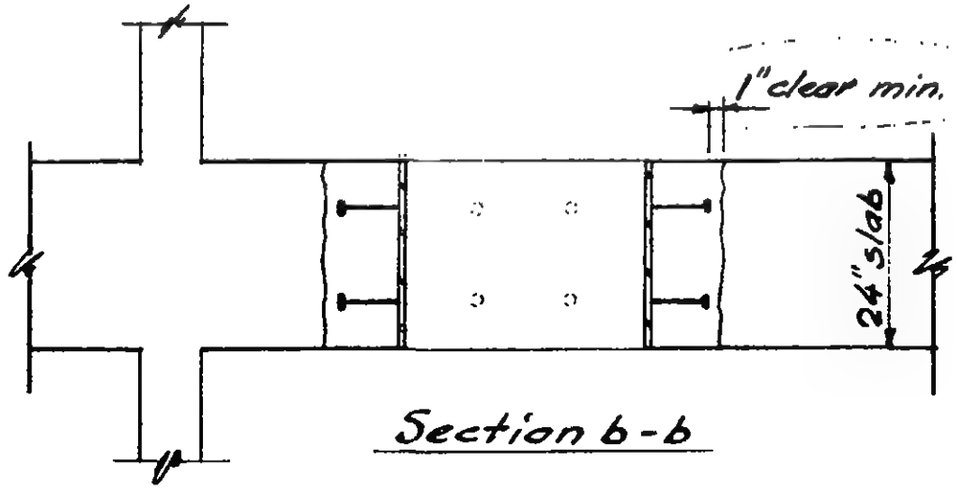

Section b-b

Detail "B"

LICENSED PROFESSIONAL ENGINEER — LESLIE E. ROBERTSON — No. 34360 — UNIVERSITY OF THE STATE OF NEW YORK

DESIGNED

DRAWN: J. Gricius

REVIEWED

See 19-K-1068.2 for notes

19-K-1068.1

SKILLING, HELLE, CHRISTIANSEN, ROBERTSON — Structural & Civil Engineers

PROJECT: THE NORLD TRADE CENTER

TITLE: NEW SLAB OPENINGS ZONE K1-EL 284-294

DATE: 5-4-72

REVISIONS

6-23-72

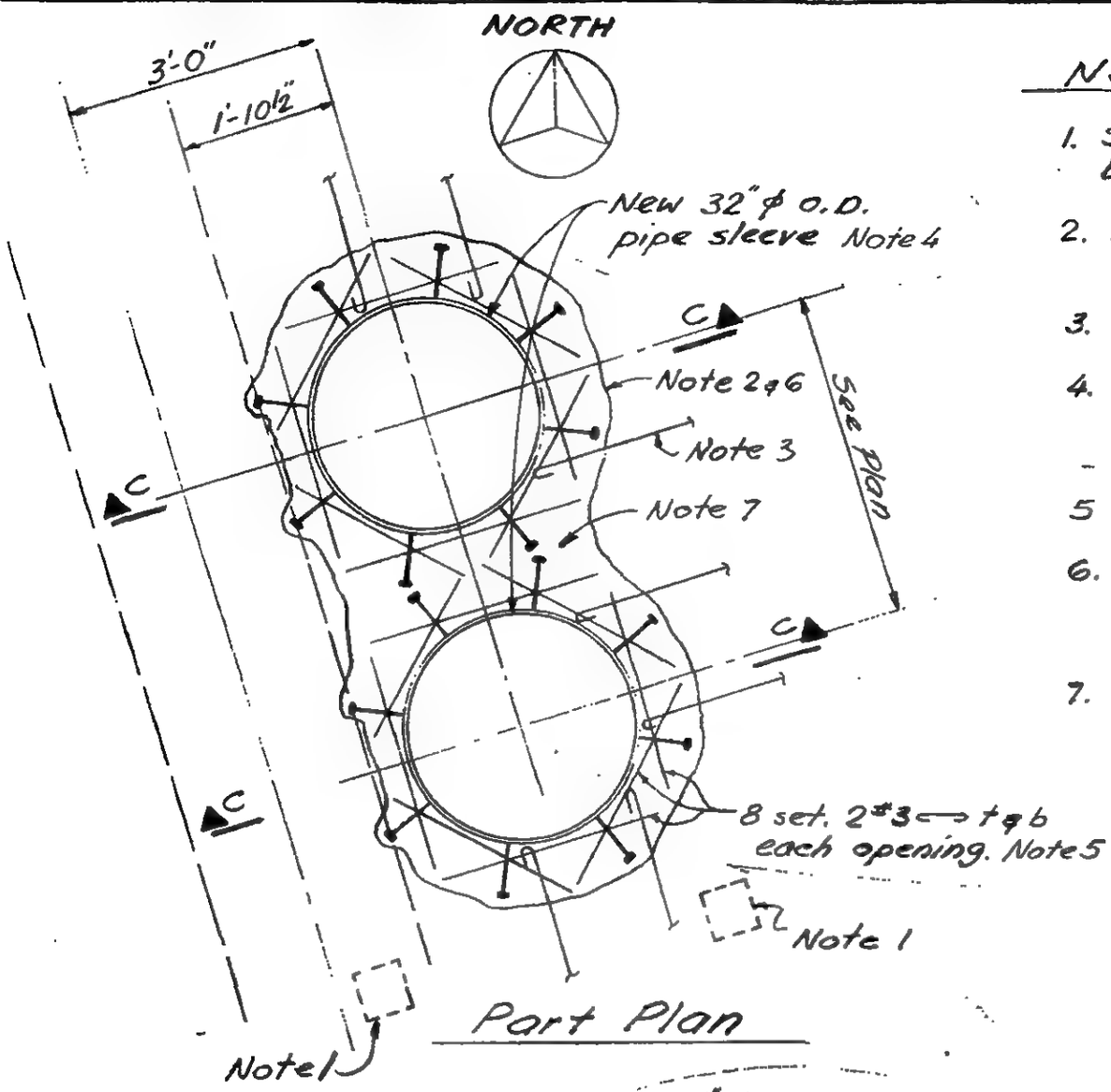

Part Plan

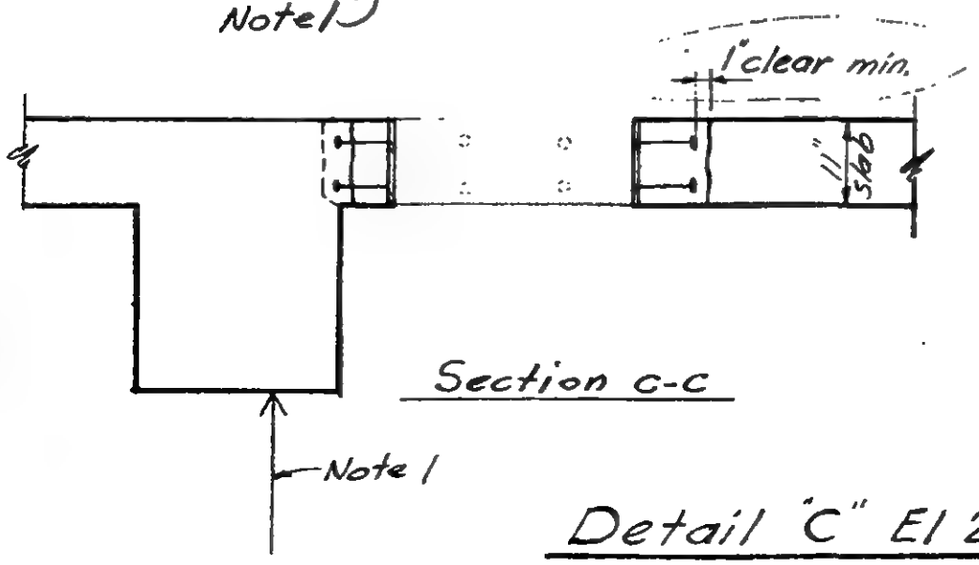

Section c-c

Detail "C" El 284

Detail "D" El 294

Notes:

1. Slabs and beams to be shored as required before removing exist. concrete.
2. Remove existing concrete to line indicated without damaging existing reinf.
3. Cut exist. reinf. and hook clear of new pipe sleeve
4. Install new Pipe Sleeve 32"ϕ O.D. API 5L pipe with .50 wall thickness with ¾"ϕ x 7⅝" headed concrete anchors spaced as indicated
5. Add new reinf. as indicated.
6. Clean face of exist. concrete an thoroughly coat entire surface with epoxy bonding compound.
7. Cast slab to edge of new opening using approved "non shrink" f'c = 4000 psi concrete.

LICENSED PROFESSIONAL ENGINEER — LESLIE E. ROBERTSON — No. 34360 — UNIVERSITY OF THE STATE OF NEW YORK

DESIGNED

DRAWN

REVIEWED

19-K-1068.2

SKILLING, HELLE, CHRISTIANSEN, ROBERTSON — Structural & Civil Engineers

PROJECT: THE WORLD TRADE CENTER | TITLE: OPENINGS IN BEAMS FOR STORM SEWER PIPES - ZONE K5 | DATE: 5-12-72

REVISIONS

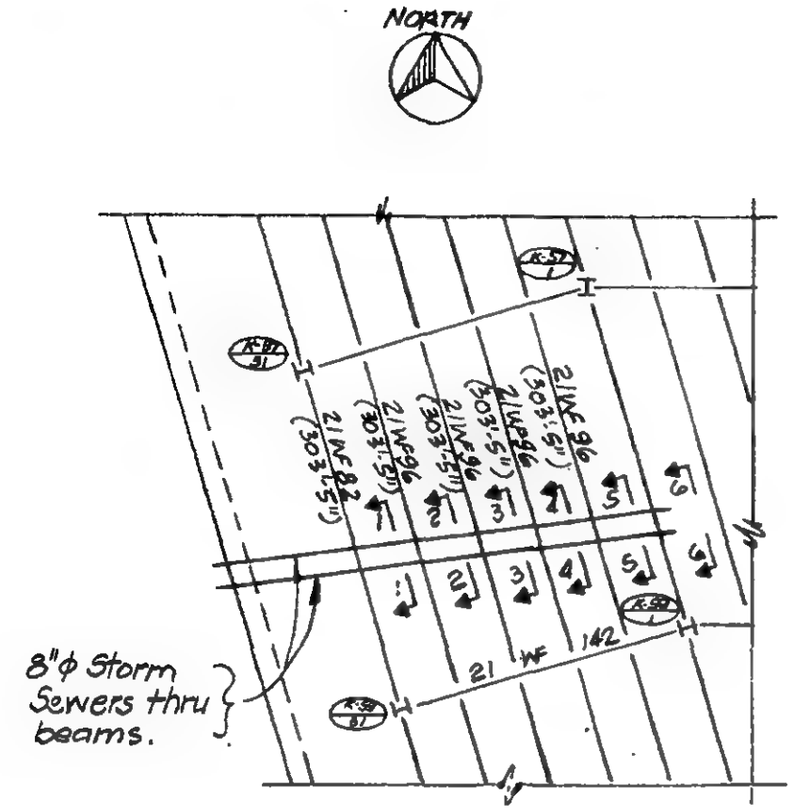

Key Plan Zone K-5

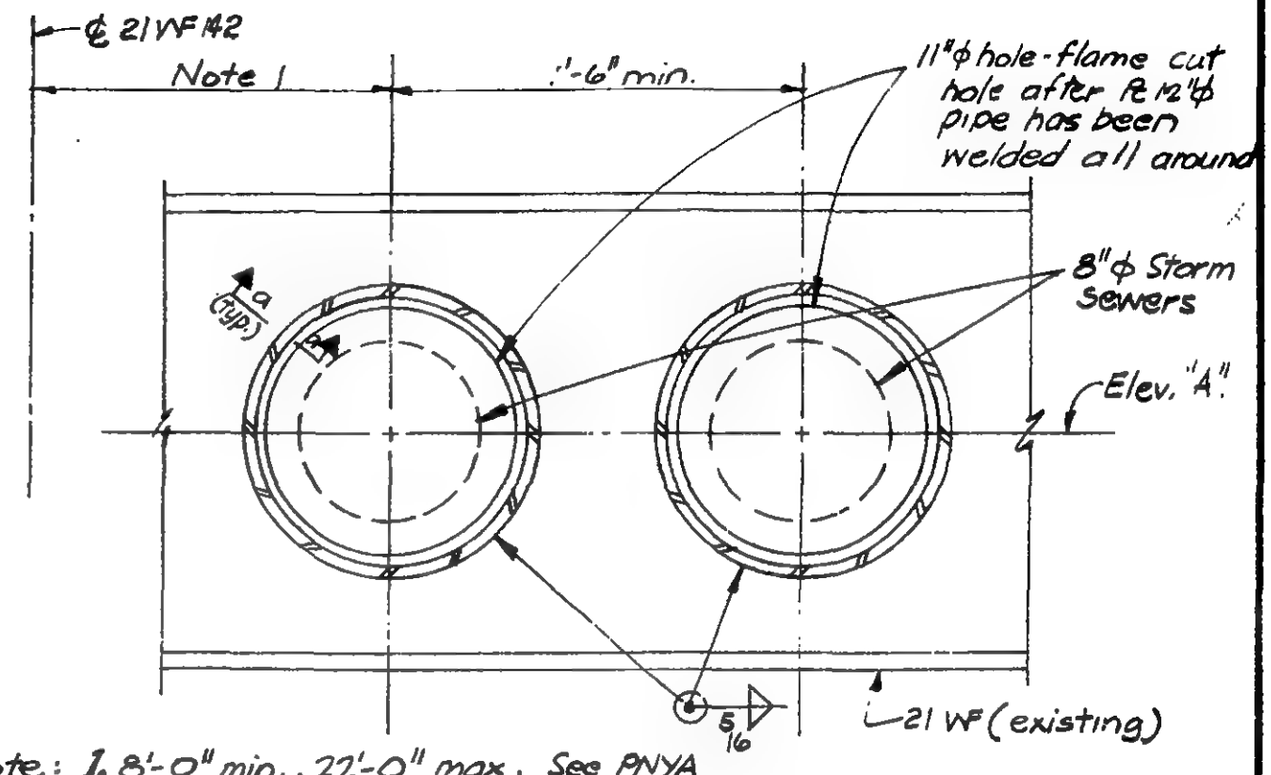

Note: 1. 8'-0" min., 22'-0" max. See PNYA Dwgs. for location.

View 1 thru 6

	Elev. "A"
View 1	302'-4 3/4"
View 2	302'-5 7/16"
View 3	302'-6 1/16"
View 4	302'-6 11/16"
View 5	302'-7 3/8"
View 6	302'-8"

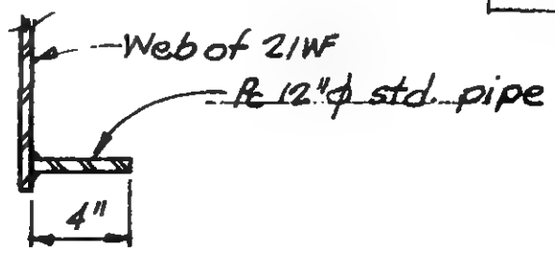

Section a-a

LICENSED PROFESSIONAL ENGINEER — LESLIE E. ROBERTSON — No. 34360 — UNIVERSITY OF THE STATE OF NEW YORK

DESIGNED JTM

DRAWN

REVIEWED

19-K-1069

SKILLING, HELLE, CHRISTIANSEN, ROBERTSON — Structural & Civil Engineers

PROJECT: THE WORLD TRADE CENTER | TITLE: NEW OPENINGS - El. 294'-0" | DATE: 11-7-72

REVISIONS

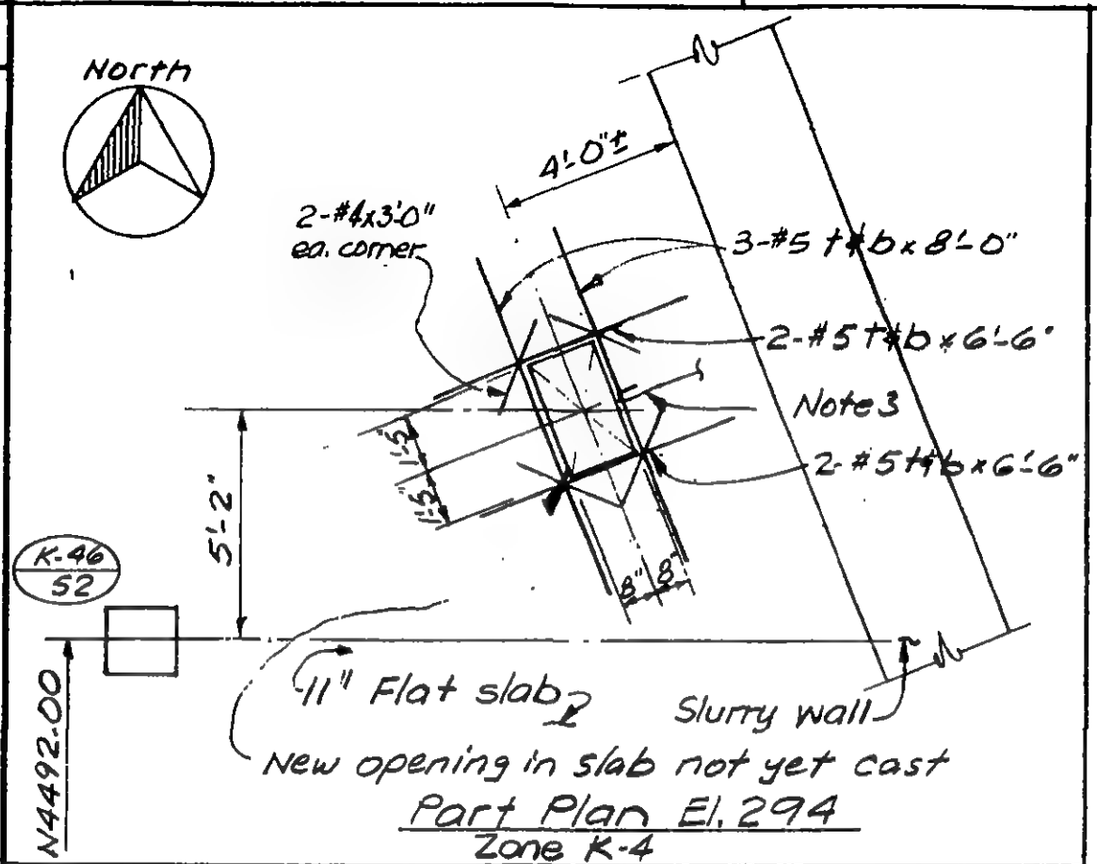

Part Plan El. 294
Zone K-4

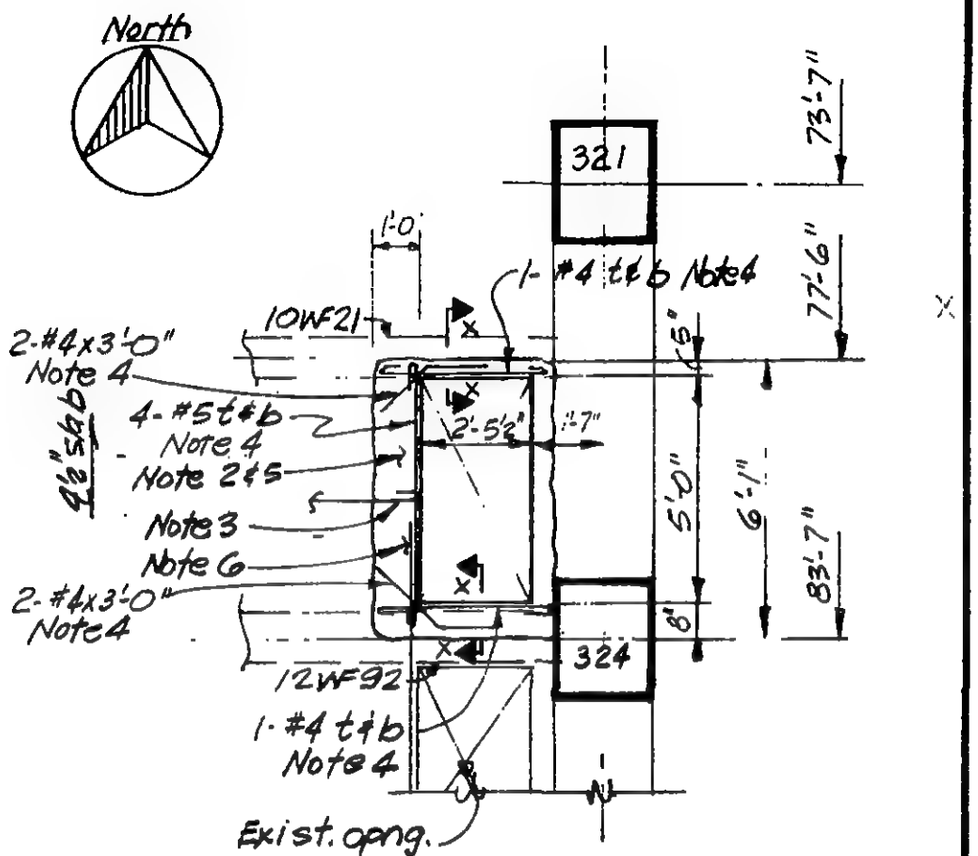

Part Plan El. 294
Tower B

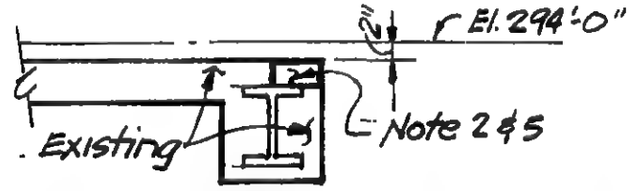

Section X-X

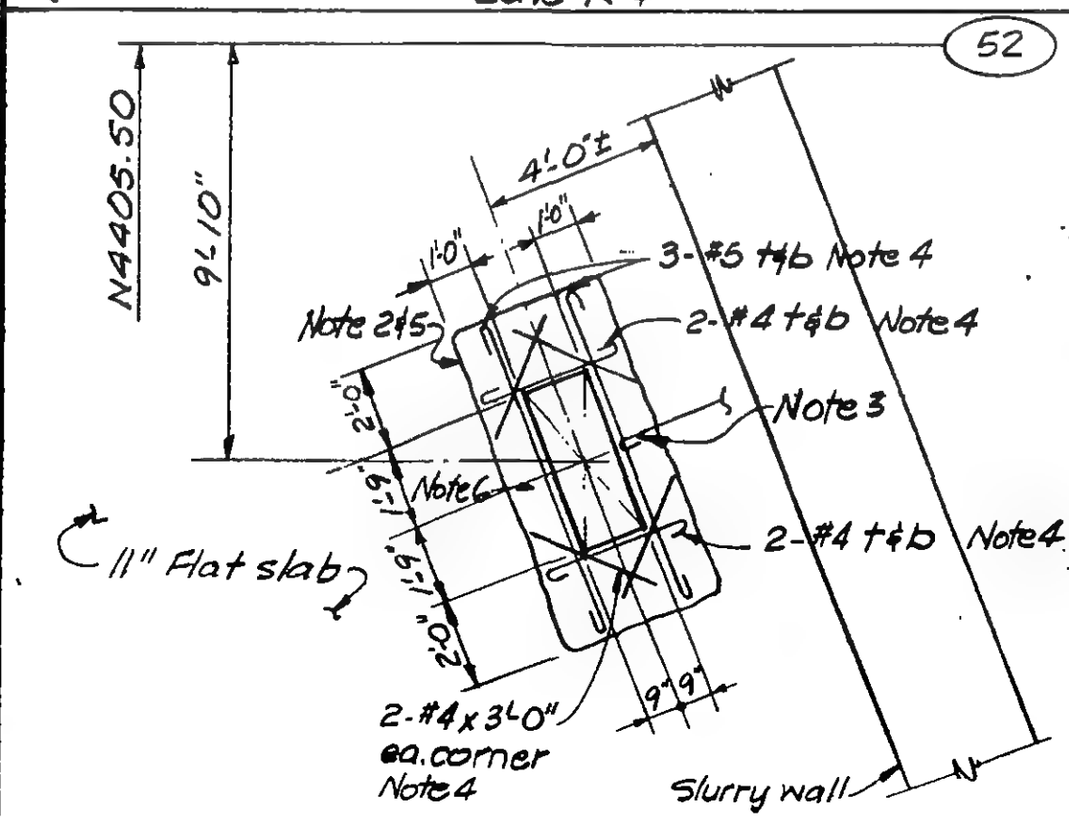

Part Plan El. 294
Zone K-6

Notes:
1. Slabs to be shored as required before removing existing concrete.
2. Remove existing concrete to line indicated without damaging existing reinf.
3. Cut existing reinf. and hook at edge of opening.
4. Add new reinf. as indicated.
5. Clean face of existing concrete and thoroughly coat entire surface with epoxy bonding compound.
6. Cast slab to edge of new opening using approved "non-shrink" f'c = 4000psi concrete.

LICENSED PROFESSIONAL ENGINEER — LESLIE E. ROBERTSON — No. 34360 — UNIVERSITY OF THE STATE OF NEW YORK

DESIGNED: WAB
DRAWN:
REVIEWED:

19-BK-1070

SKILLING, HELLE, CHRISTIANSEN, ROBERTSON — Structural & Civil Engineers

PROJECT: THE WORLD TRADE CENTER | TITLE: NEW OPENINGS - WALLS ZONE - K1, El. 242 | DATE: 10-10-72

REVISIONS

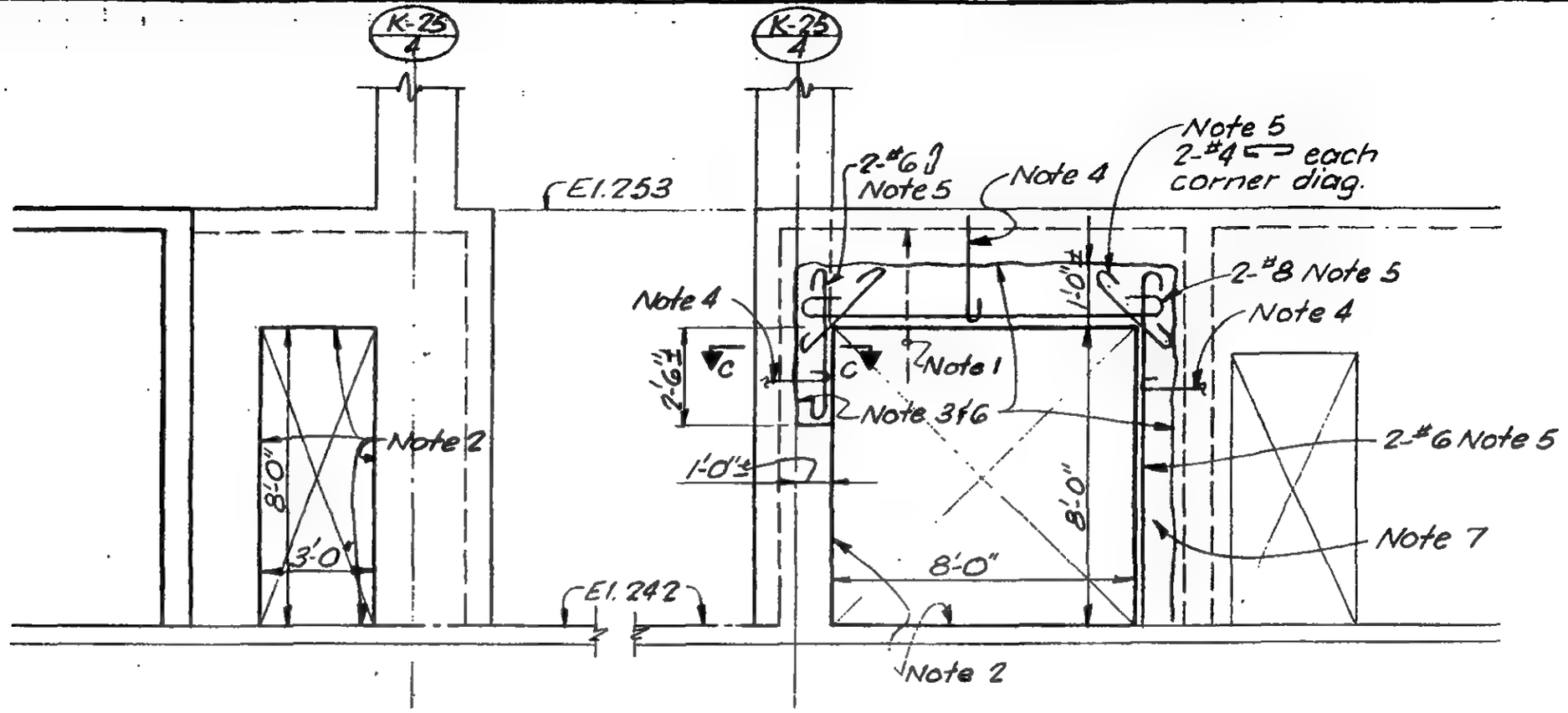

Section A-A

Section B-B

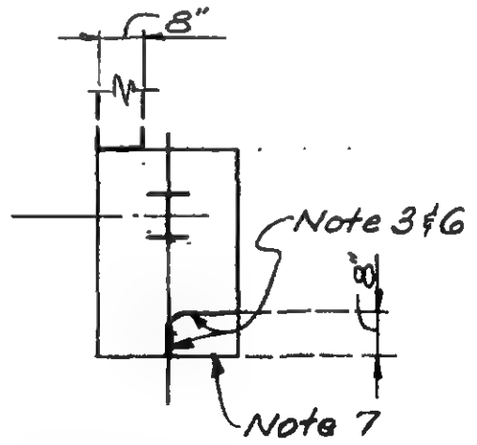

Section C-C

Note 1. Shore slab adjacent to wall as required before removing wall.
Note 2. Remove existing concrete to clean smooth line as shown.
Note 3. Remove existing concrete to line indicated without damage to existing reinforcing.
Note 4. Cut existing reinforcing and hook at edge of new opening.
Note 5. Add new reinforcing as indicated.
Note 6. Clean face of existing concrete and thoroughly coat entire surface with approved epoxy bonding compound.
Note 7. Cast wall to edge of new opening using approved "non-shrink" fc = 4000 psi concrete.
Note 8. See SCK-20 for plan.

LICENSED PROFESSIONAL ENGINEER — LESLIE E. ROBERTSON — No. 34490 — UNIVERSITY OF THE STATE OF NEW YORK

DESIGNED: WAB
DRAWN: TR
REVIEWED: LER

10-K-1072

SKILLING, HELLE, CHRISTIANSEN, ROBERTSON — Structural & Civil Engineers

PROJECT THE WORLD TRADE CENTER | TITLE WALL OPENING - EL.284 - ZONE K6 | DATE 1-18-73

REVISIONS

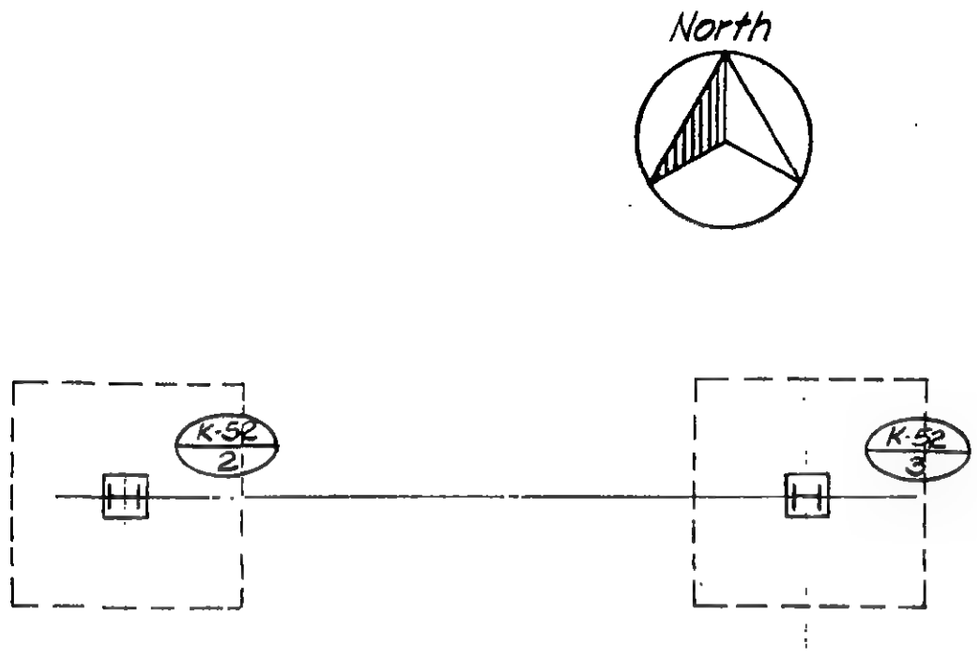

Part Plan El. 284
Zone K6
PNYA C.O. 720.015

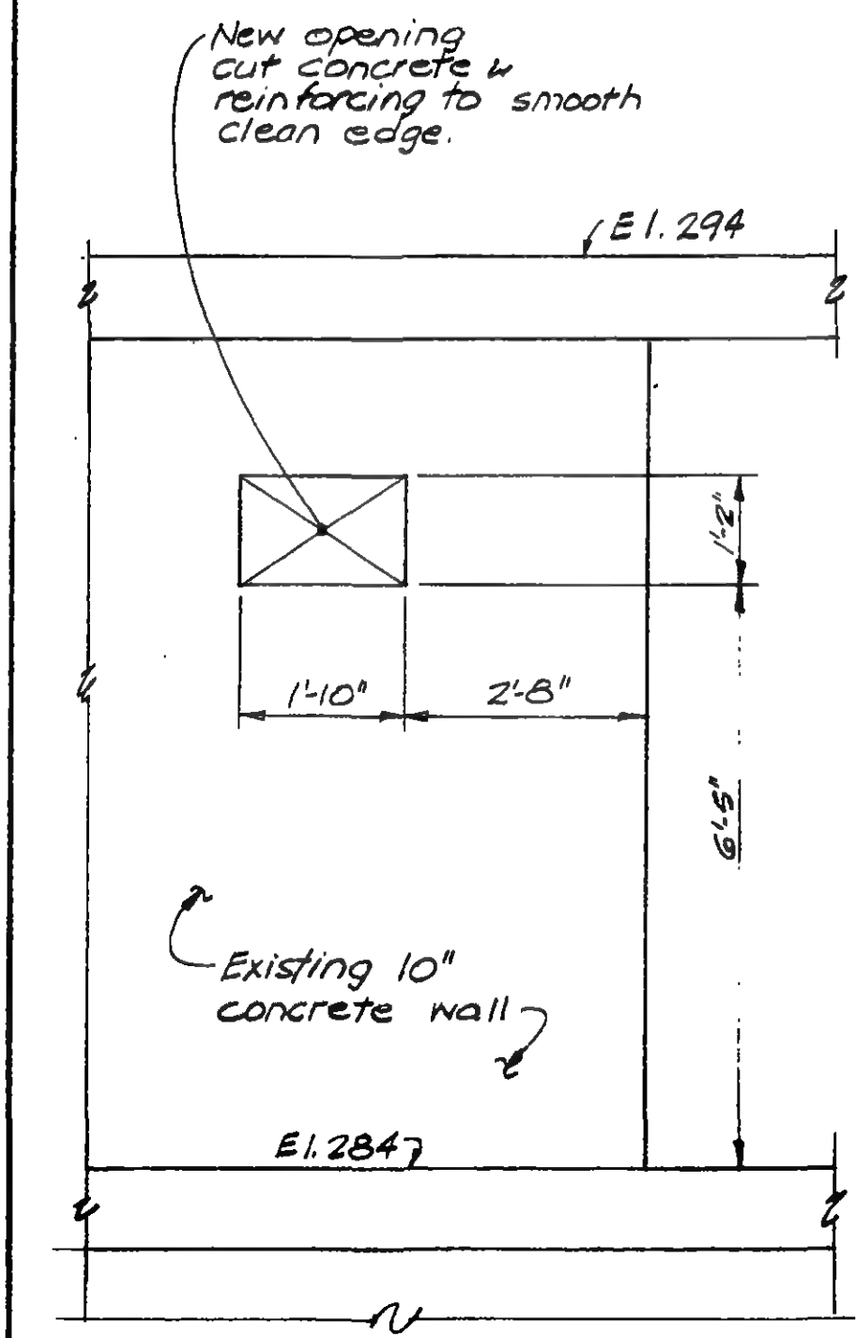

Section X-X

LICENSED PROFESSIONAL ENGINEER
LESLIE E. ROBERTSON
No. 34360
UNIVERSITY OF THE STATE OF NEW YORK

DESIGNED

DRAWN

REVIEWED

19-K-1074

SKILLING, HELLE, CHRISTIANSEN, ROBERTSON — Structural & Civil Engineers

PROJECT: THE WORLD TRADE CENTER

TITLE: RELOCATED TRUCK PIT, ZONE J-6, EL. 290-294

DATE: 4-12-73

REVISIONS

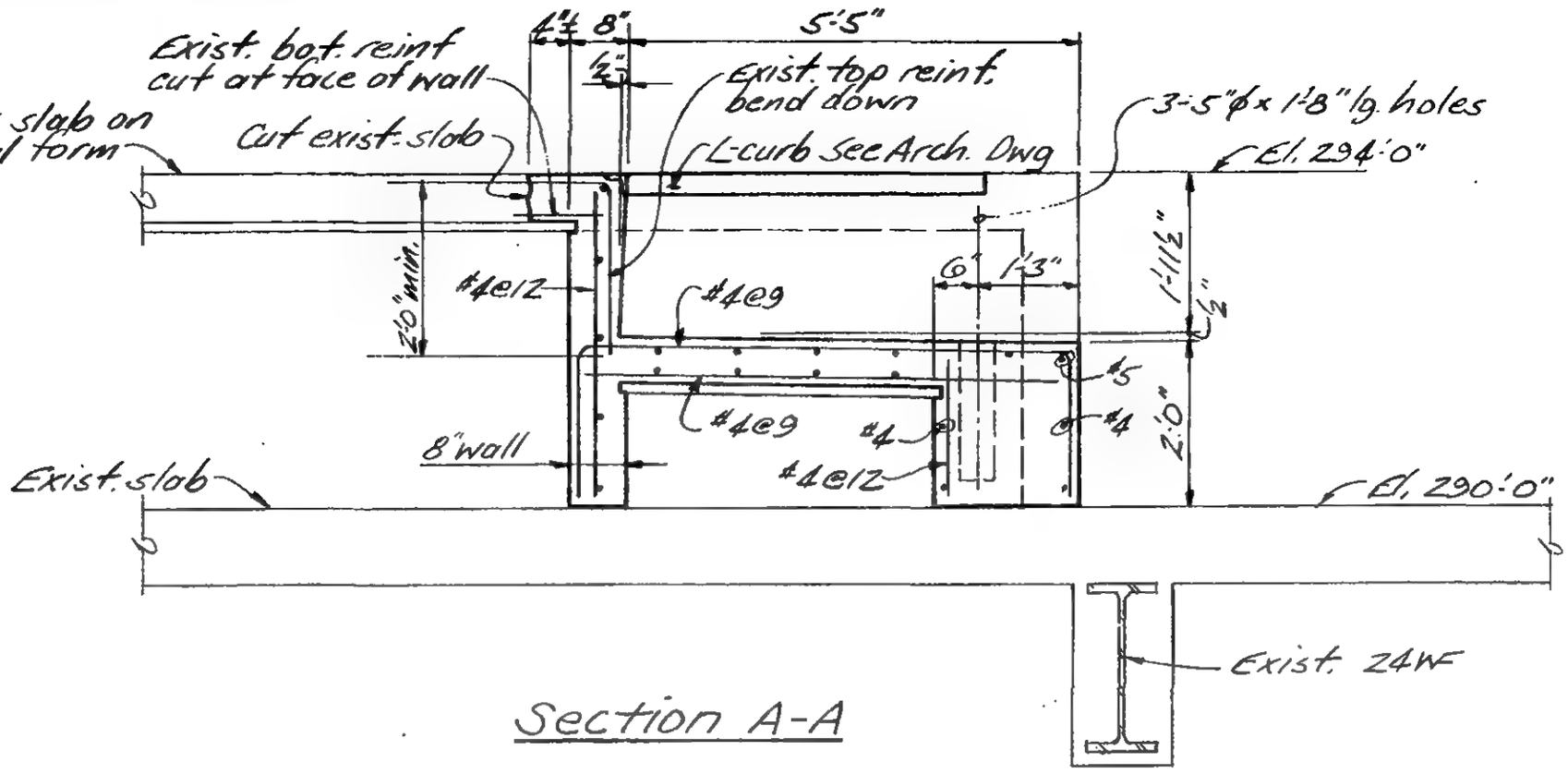

Section A-A

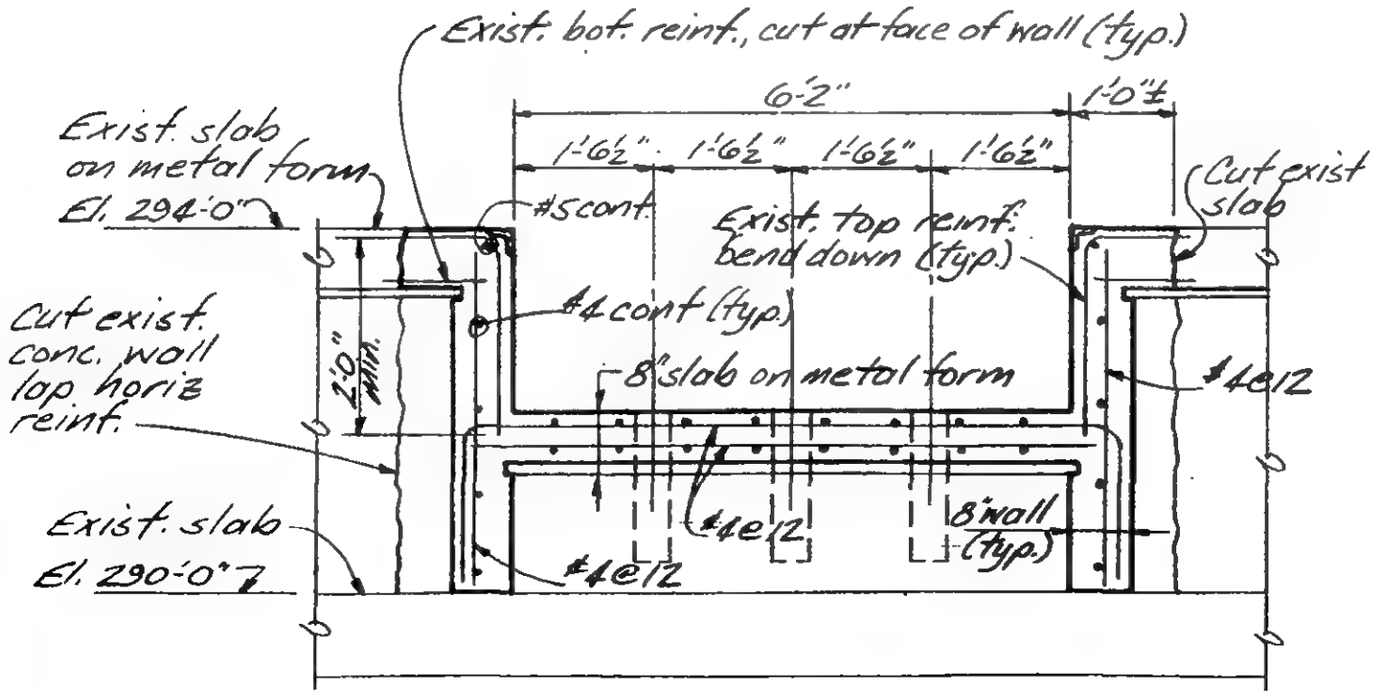

Section B-B

Notes:

1. Keep live load on El. 294 at least 10' away from this area until work is completed and concrete cured.
2. Remove exist. conc. wall and El. 294 slab to line indicated without damaging exist. reint.
3. Add new reint. as indicated.
4. Clean face of exist. conc at joint and thoroughly coat entire surface with epoxy bonding compound
5. Cast new concrete as shown using approved non-shrink, f'_c = 4000 psi concrete.

LICENSED PROFESSIONAL ENGINEER — LESLIE E. ROBERTSON — No. 34360 — UNIVERSITY OF THE STATE OF NEW YORK

DESIGNED: JTM

DRAWN: JA

REVIEWED:

19-JK-1075.1

SKILLING, HELLE, CHRISTIANSEN, ROBERTSON — Structural & Civil Engineers

PROJECT: THE WORLD TRADE CENTER | TITLE: RELOCATED TRUCK PIT, ZONE K-2 EL. 290-294 | DATE: 4-12-73

REVISIONS

4/26/73

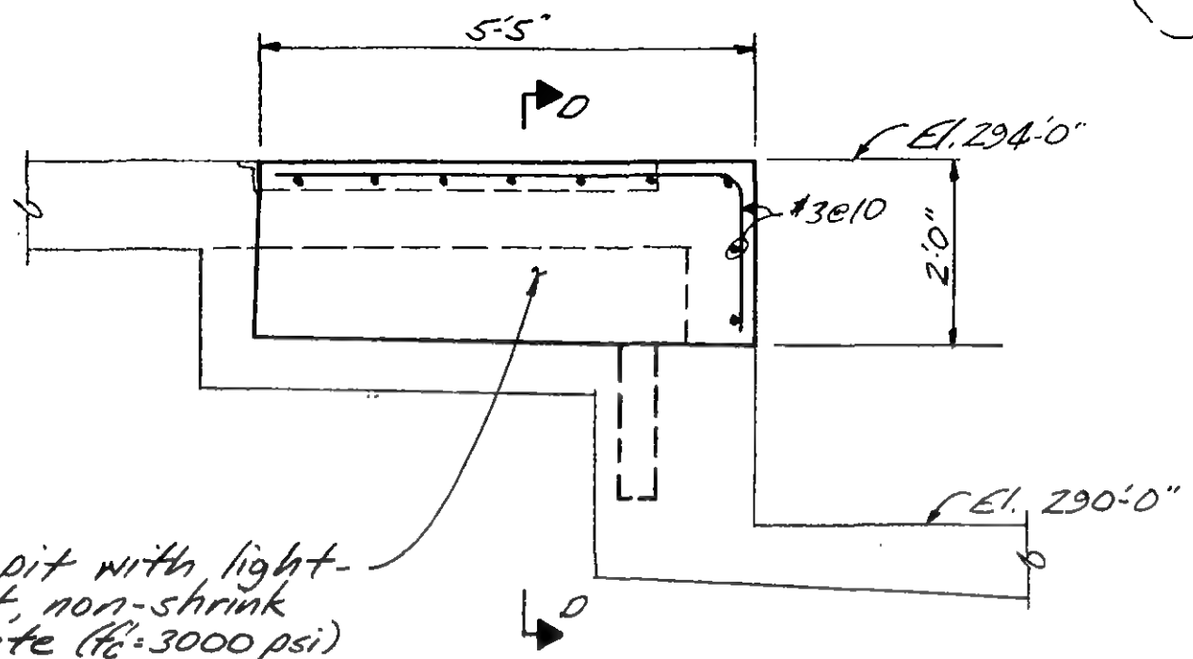

Fill in pit with light-weight, non-shrink concrete (f'_c=3000 psi) flush with top and sides of pit.

Section C-C

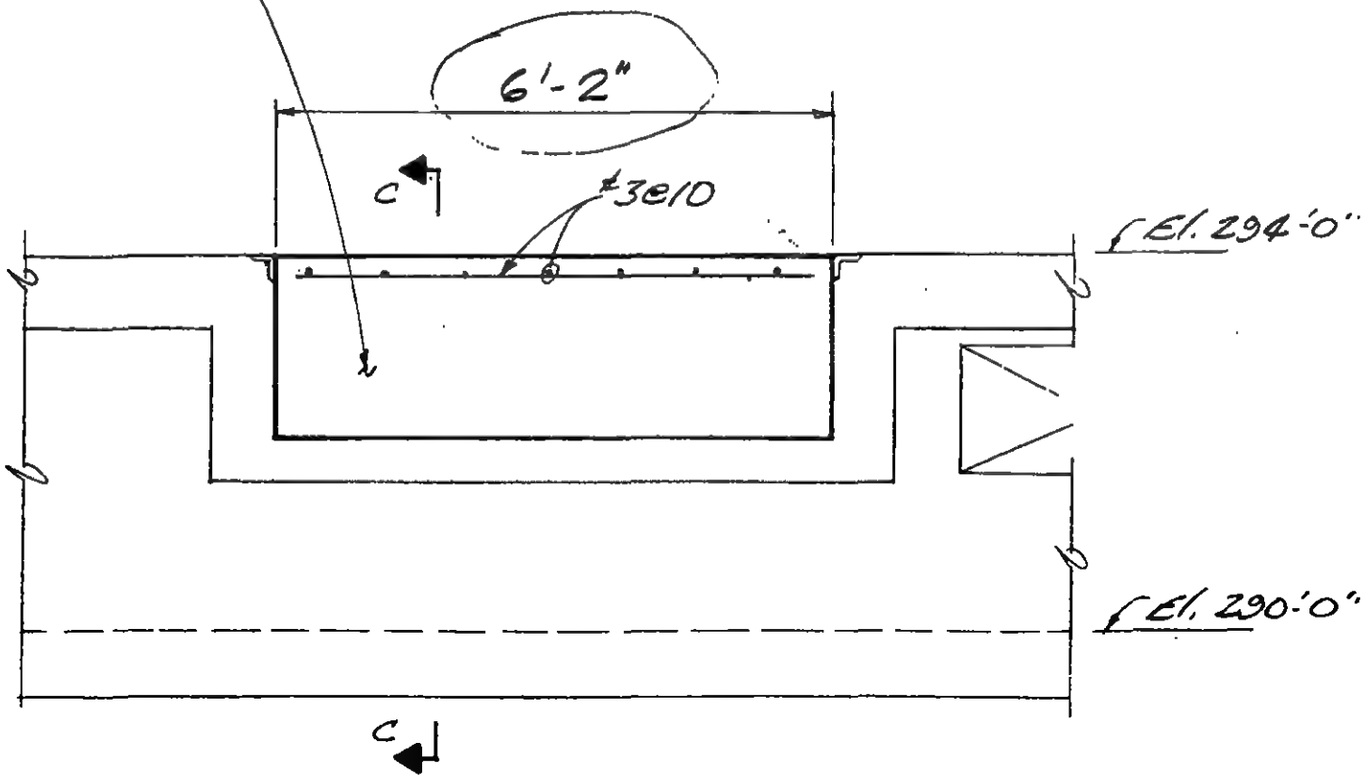

Section D-D

LICENSED PROFESSIONAL ENGINEER — LESLIE E. ROBERTSON — No. 34360 — UNIVERSITY OF THE STATE OF NEW YORK

DESIGNED: JTM

DRAWN: JA

REVIEWED:

19-JK-1075.2

SKILLING, HELLE, CHRISTIANSEN, ROBERTSON — Structural & Civil Engineers

PROJECT: THE WORLD TRADE CENTER | TITLE: EL. 274, ZONE J-4, RAMP J REINFORCEMENT | DATE: 5-8-73

REVISIONS

9-7-73

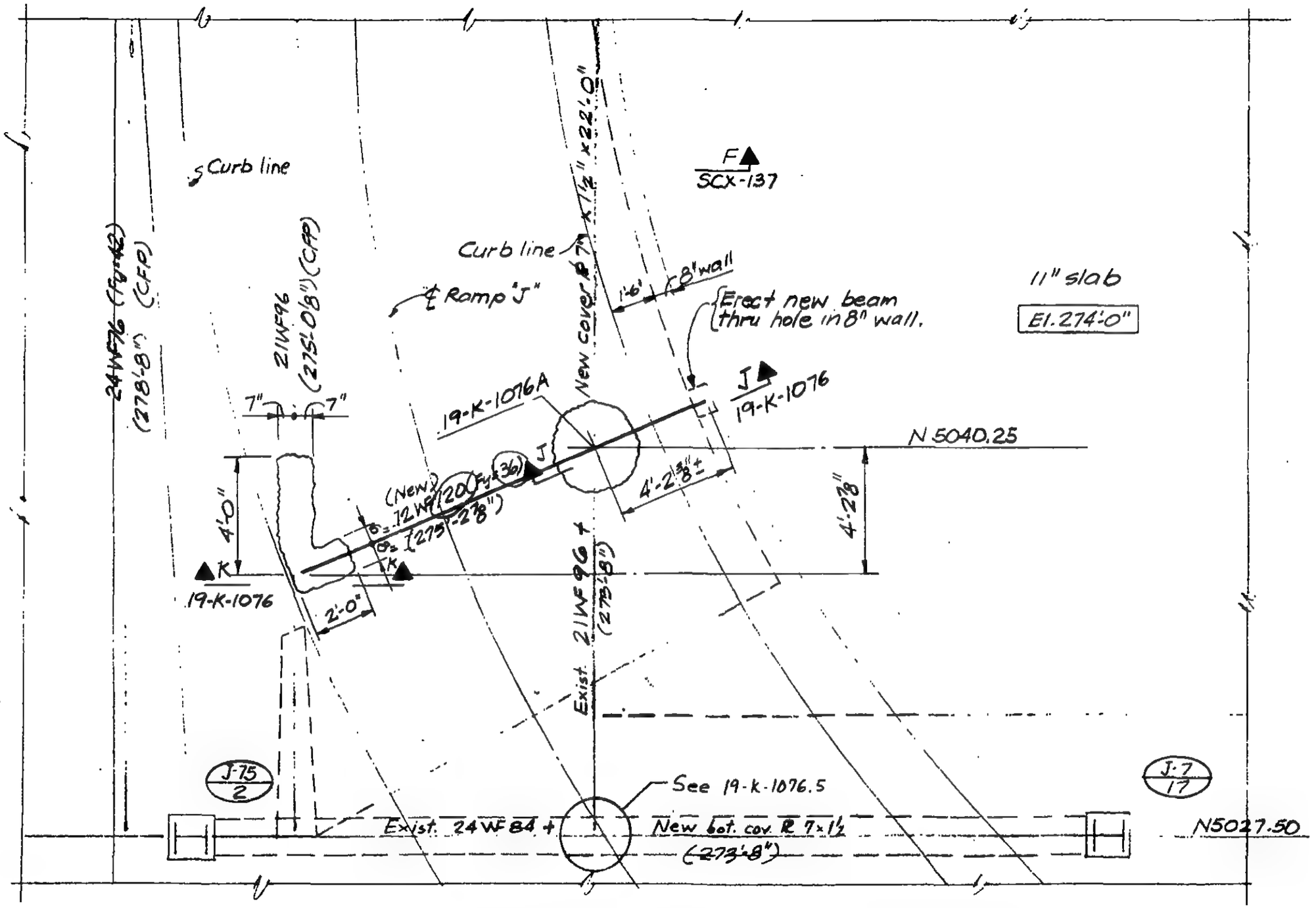

Part Plan Ramp "J"

Follow construction sequence shown in section J-J.

North

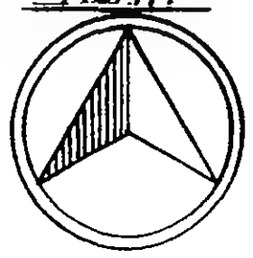

LICENSED PROFESSIONAL ENGINEER — LESLIE E. ROBERTSON — No. 34360 — UNIVERSITY OF THE STATE OF NEW YORK

DESIGNED: JTM

DRAWN: PMCarli

REVIEWED:

19-J-1076.1

SKILLING, HELLE, CHRISTIANSEN, ROBERTSON — Structural & Civil Engineers

PROJECT: THE WORLD TRADE CENTER | TITLE: EL. 274, ZONE J-4, RAMP J REINFORCEMENT | DATE: 5-8-73

REVISIONS

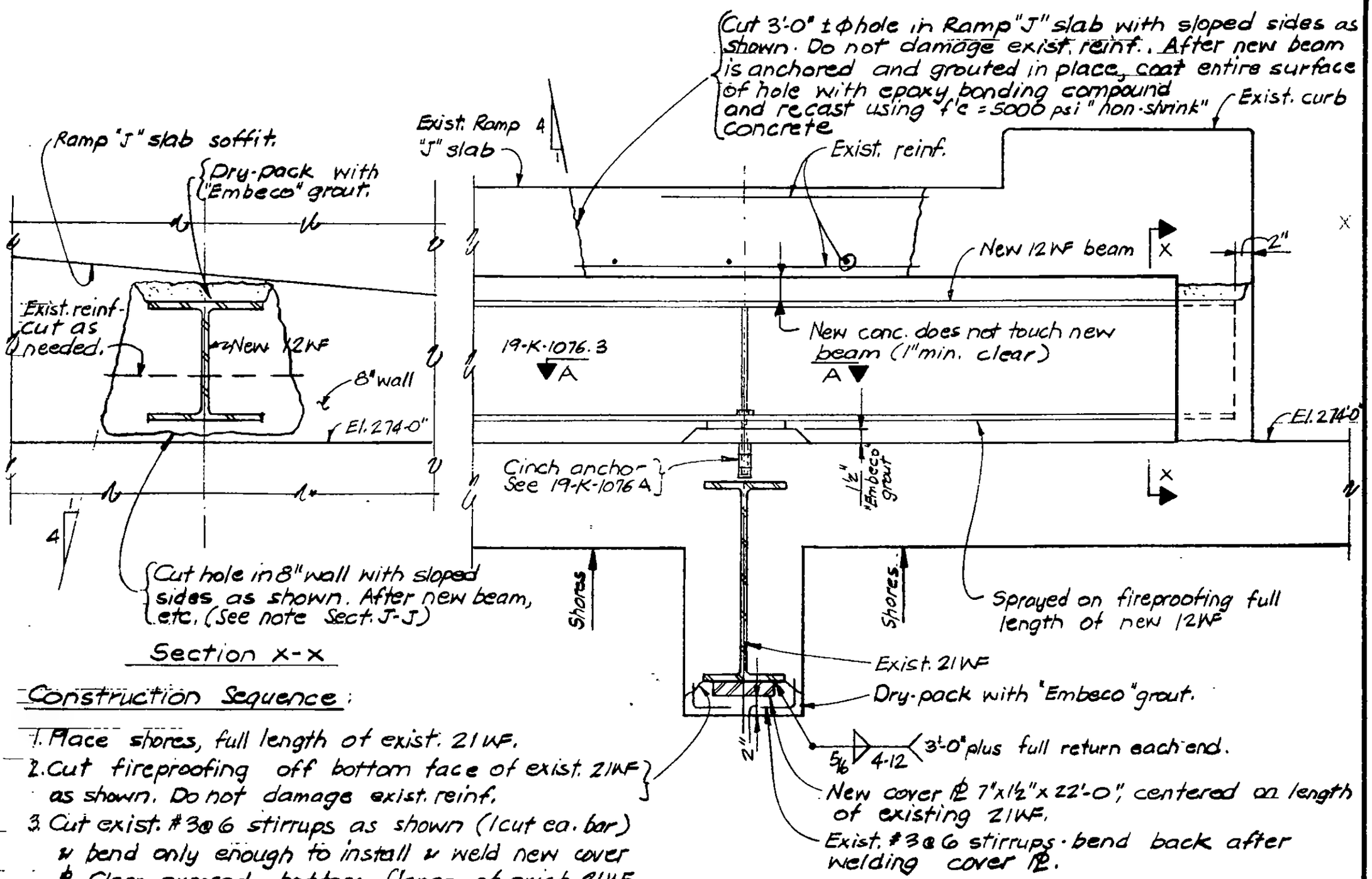

Section X-X

Section J-J

Construction Sequence:

1. Place shores, full length of exist. 21WF.
2. Cut fireproofing off bottom face of exist. 21WF as shown. Do not damage exist. reinf.
3. Cut exist. #3 @ 6 stirrups as shown (1 cut ea. bar) & bend only enough to install & weld new cover Pl, Clean exposed bottom flange of exist. 21WF
4. Install & weld new cover Pl, bend stirrups back as shown, dry-pack beam soffit.
5. Complete all other work shown on 19-K-1074 drawings.
6. Remove shores.

LICENSED PROFESSIONAL ENGINEER — LESLIE E. ROBERTSON — No. 34860 — UNIVERSITY OF THE STATE OF NEW YORK

DESIGNED: J.T.M.
DRAWN: P.M.Oulli
REVIEWED:

19-J-1076.2

SKILLING, HELLE, CHRISTIANSEN, ROBERTSON — Structural & Civil Engineers

PROJECT: THE WORLD TRADE CENTER | TITLE: EL 274, ZONE J-4, RAMP J REINFORCEMENT | DATE: 5-8-73

REVISIONS

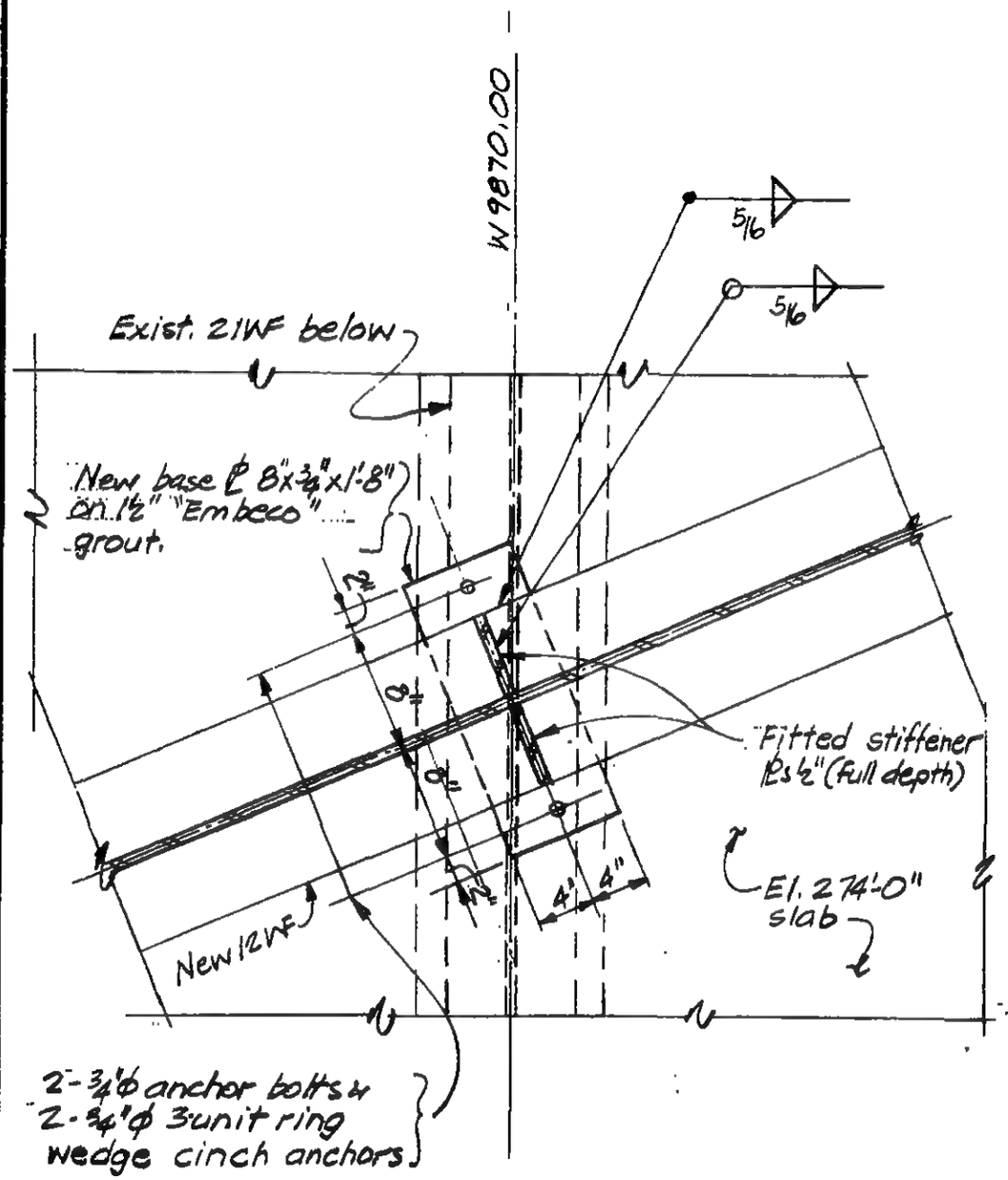

Detail A

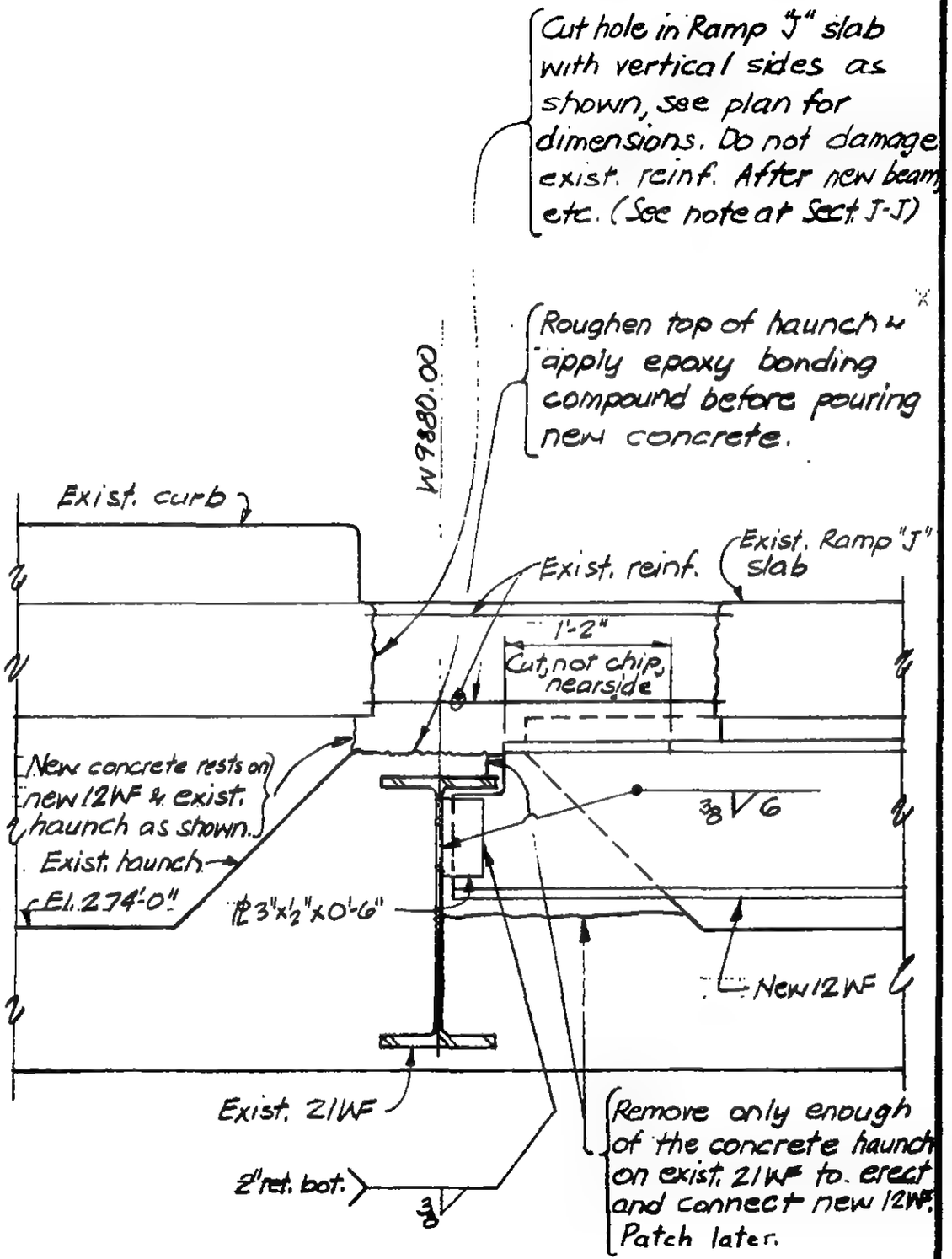

Section K-K

LICENSED PROFESSIONAL ENGINEER — LESLIE E. ROBERTSON — No. 34960 — UNIVERSITY OF THE STATE OF NEW YORK

DESIGNED: JTM
DRAWN: PM Oaks
REVIEWED:

19-J-1076.3

SKILLING, HELLE, CHRISTIANSEN, ROBERTSON — Structural & Civil Engineers

PROJECT THE WORLD TRADE CENTER | TITLE ZONE J-2, RAMP J REINFORCEMENT | DATE 5-8-73

REVISIONS

9-7-73

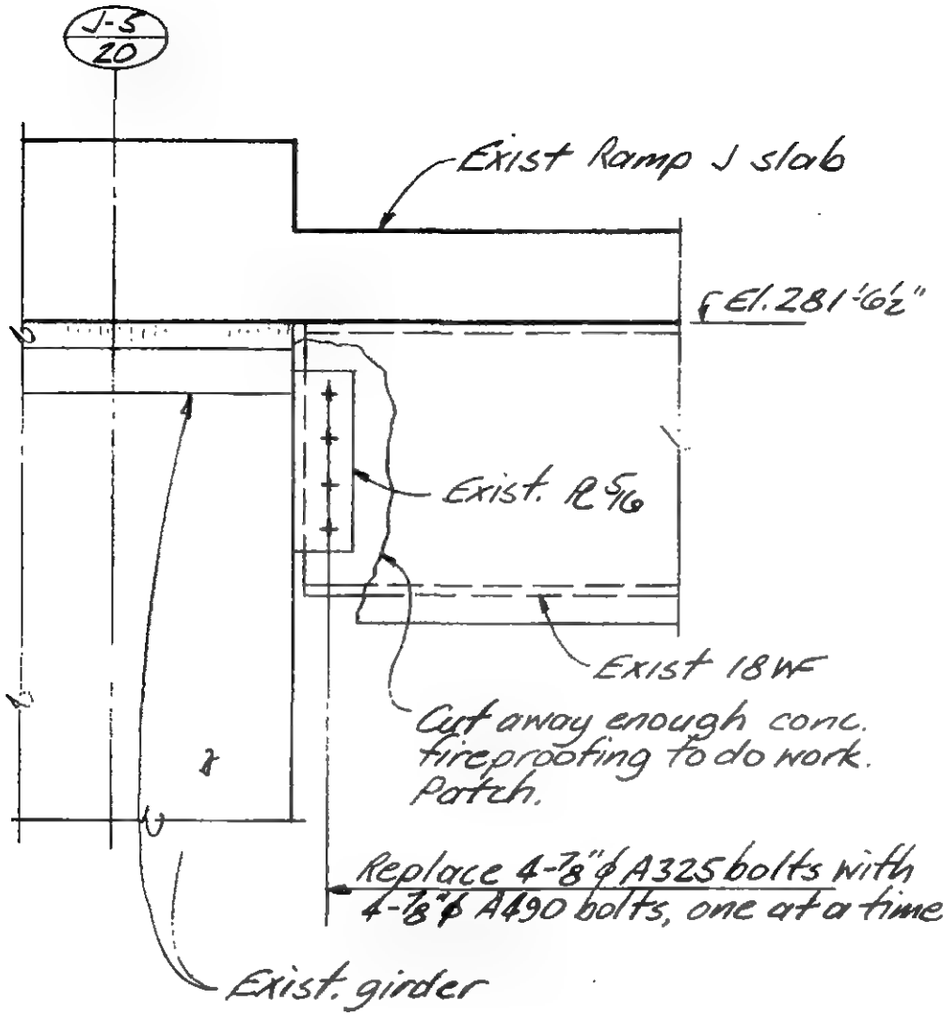

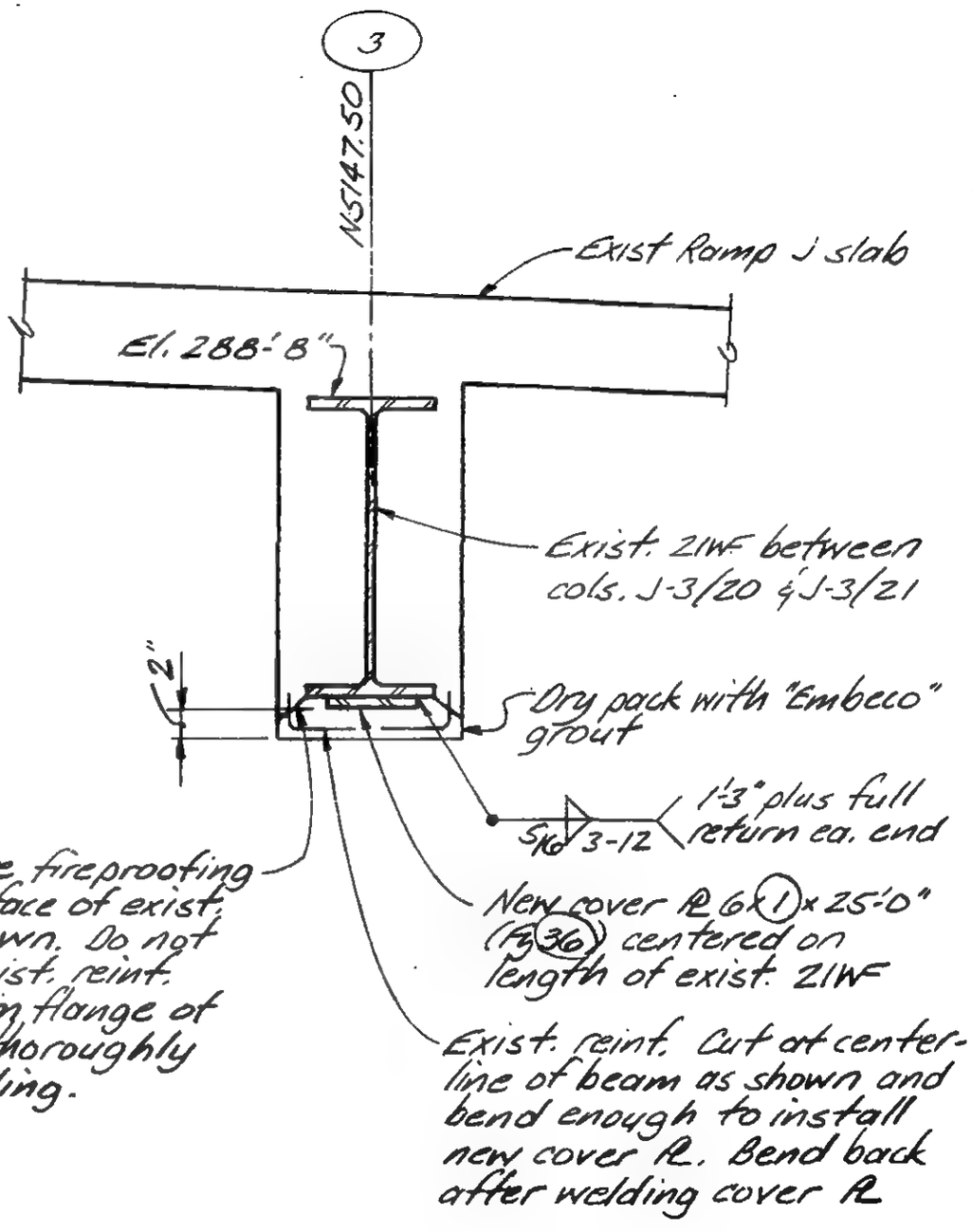

LICENSED PROFESSIONAL ENGINEER — LESLIE E. ROBERTSON — No. 34360 — UNIVERSITY OF THE STATE OF NEW YORK

DESIGNED JTM

DRAWN JA

REVIEWED

19-J-1076.4

SKILLING, HELLE, CHRISTIANSEN, ROBERTSON — Structural & Civil Engineers

PROJECT THE WORLD TRADE CENTER | TITLE EL. 274, ZONE J-4, RAMP J REINFORCEMENT | DATE 5-8-73

REVISIONS

5-24-73

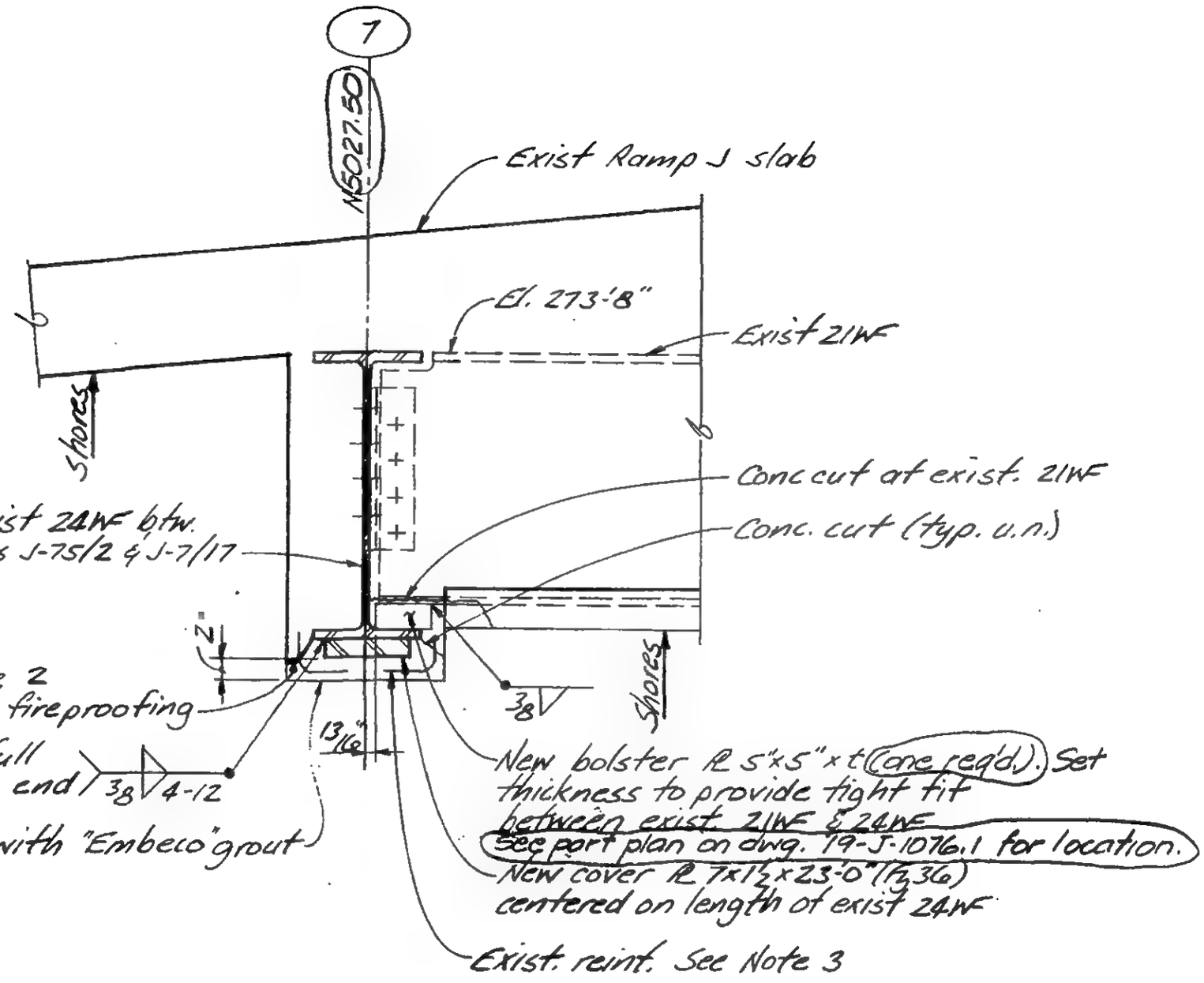

Notes:

1. Place shores before work begins and remove shores after work is complete.
2. Cut concrete fireproofing off bottom face of exist. 24WF as shown. Do not damage exist. reint. Clean bottom flange of exist. 24WF thoroughly before welding.
3. Exist. reint. cut at centerline of beam as shown and bend enough to install new cover plate. Bend back after welding cover plate.

LICENSED PROFESSIONAL ENGINEER — LESLIE E. ROBERTSON — No. 34360 — UNIVERSITY OF THE STATE OF NEW YORK

DESIGNED JTM

DRAWN JA

REVIEWED

19-J-1076.5

SKILLING, HELLE, CHRISTIANSEN, ROBERTSON — Structural & Civil Engineers

PROJECT: THE WORLD TRADE CENTER | TITLE: EL 274, ZONE J-4, RAMP J REINFORCEMENT | DATE: 5-8-73

REVISIONS

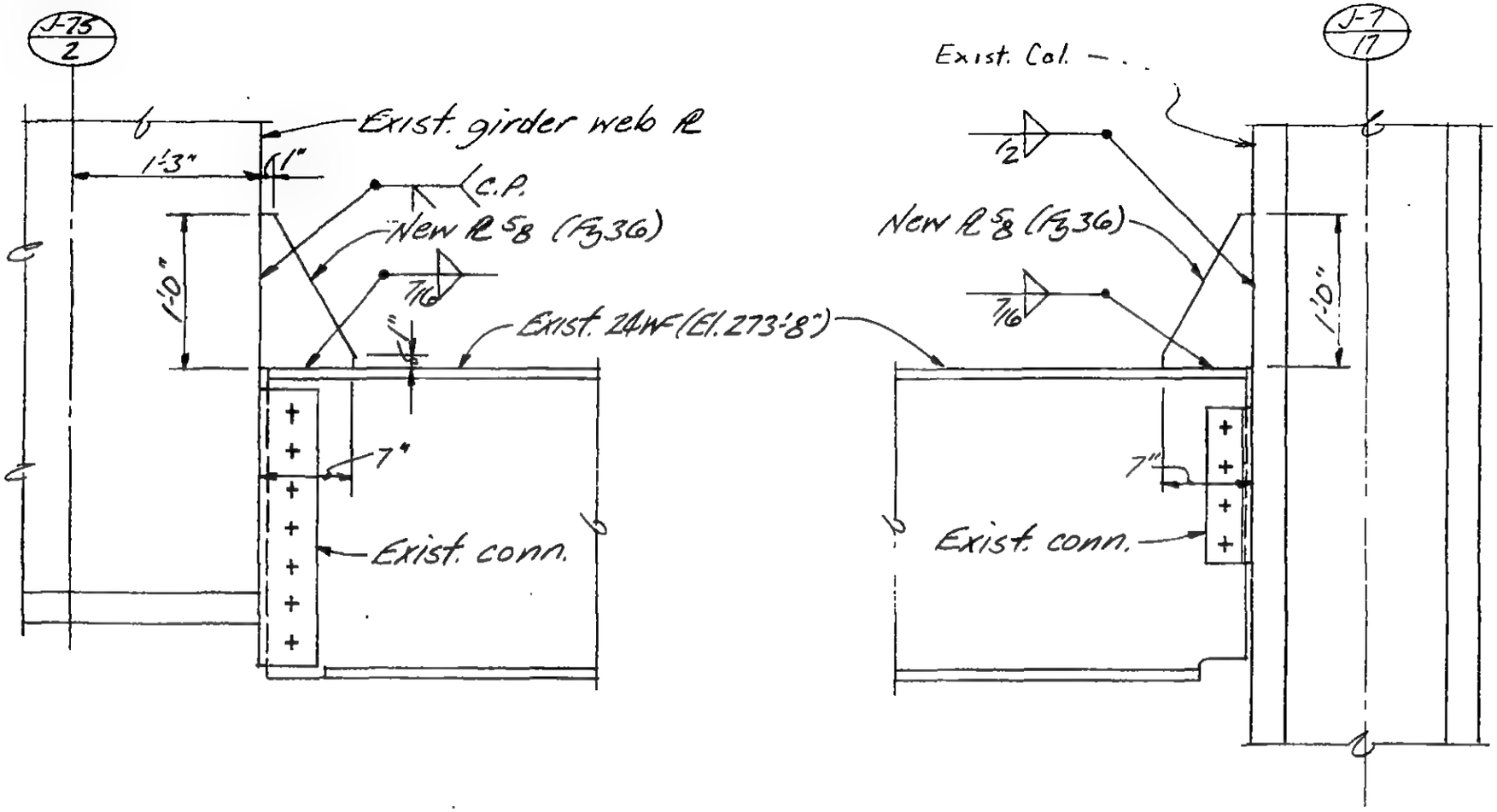

Notes:
1. Chip concrete fireproofing (not shown) away as necessary to weld on new ℄.
2. Clean steel surfaces to be welded.
3. Patch concrete fireproofing after welding is completed.

LICENSED PROFESSIONAL ENGINEER
LESLIE E. ROBERTSON
No. 34360
UNIVERSITY OF THE STATE OF NEW YORK

DESIGNED VTM
DRAWN JA
REVIEWED

19-J-1076.6

SKILLING, HELLE, CHRISTIANSEN, ROBERTSON — Structural & Civil Engineers

PROJECT: THE WORLD TRADE CENTER | TITLE: NEW OPENING IN SLOPING SLAB - ZONE J-6 | DATE: 5-15-73

REVISIONS

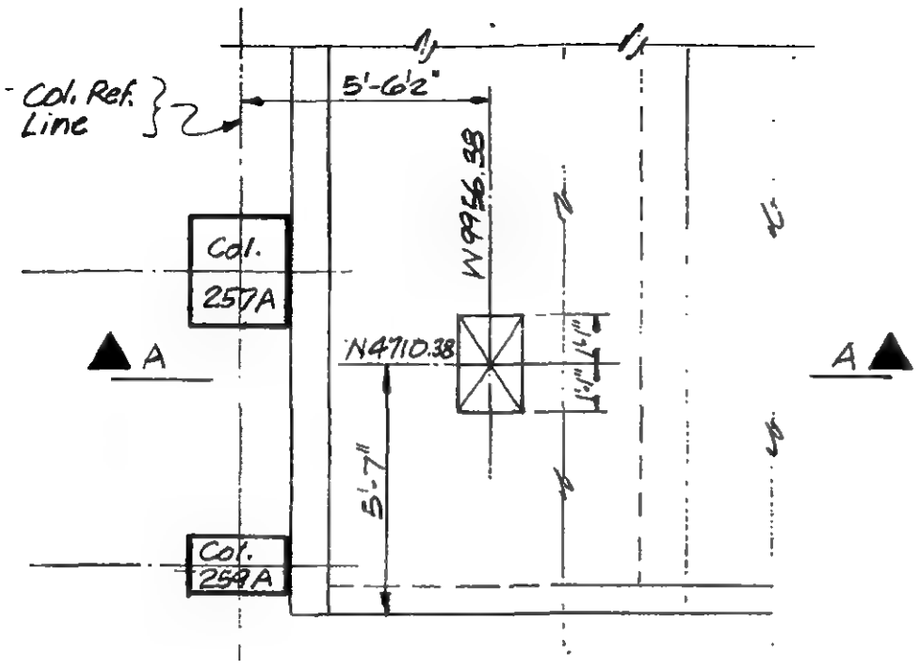

Part Plan
New Opening in Sloping Slab

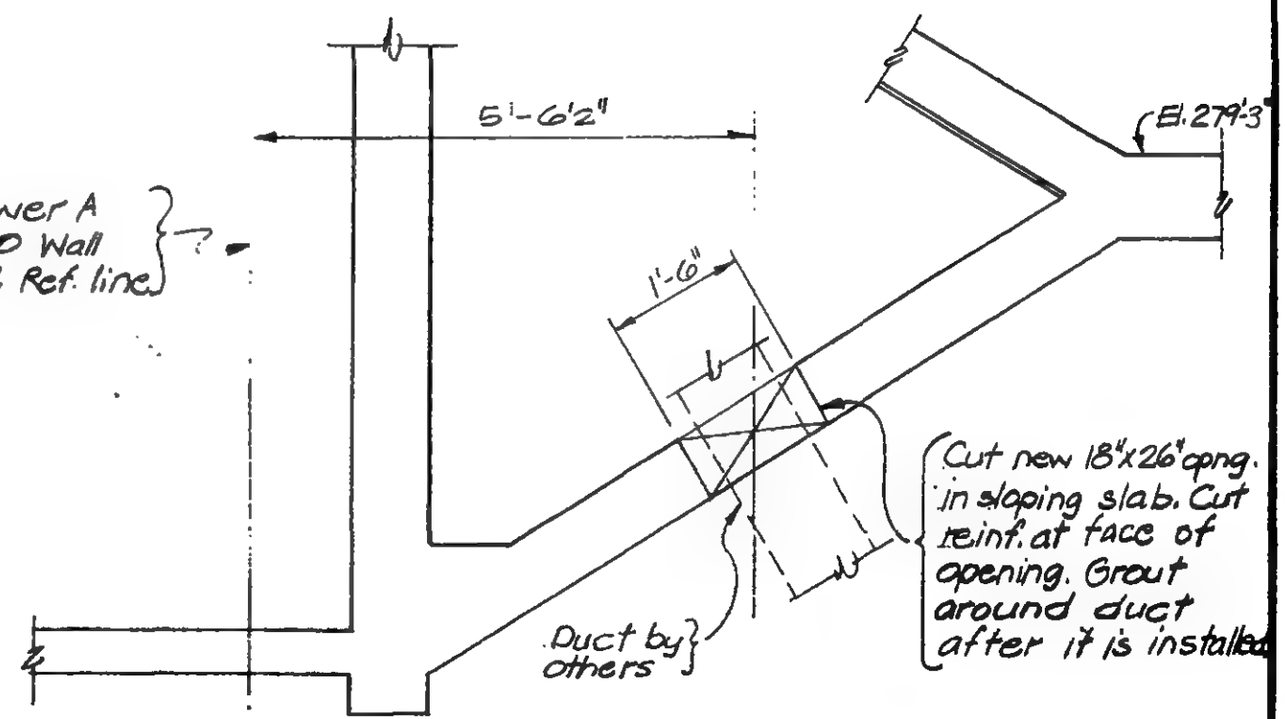

Section A-A

LICENSED PROFESSIONAL ENGINEER — LESLIE E. ROBERTSON — No. 34260 — UNIVERSITY OF THE STATE OF NEW YORK

DESIGNED JTM

DRAWN

REVIEWED

19-J-1077

SKILLING, HELLE, CHRISTIANSEN, ROBERTSON — Structural & Civil Engineers

PROJECT THE WORLD TRADE CENTER | TITLE SHIMS AT STAIR PL 2 - SOUTH TOWER A EL 310/332 | DATE 7-10-73

REVISIONS

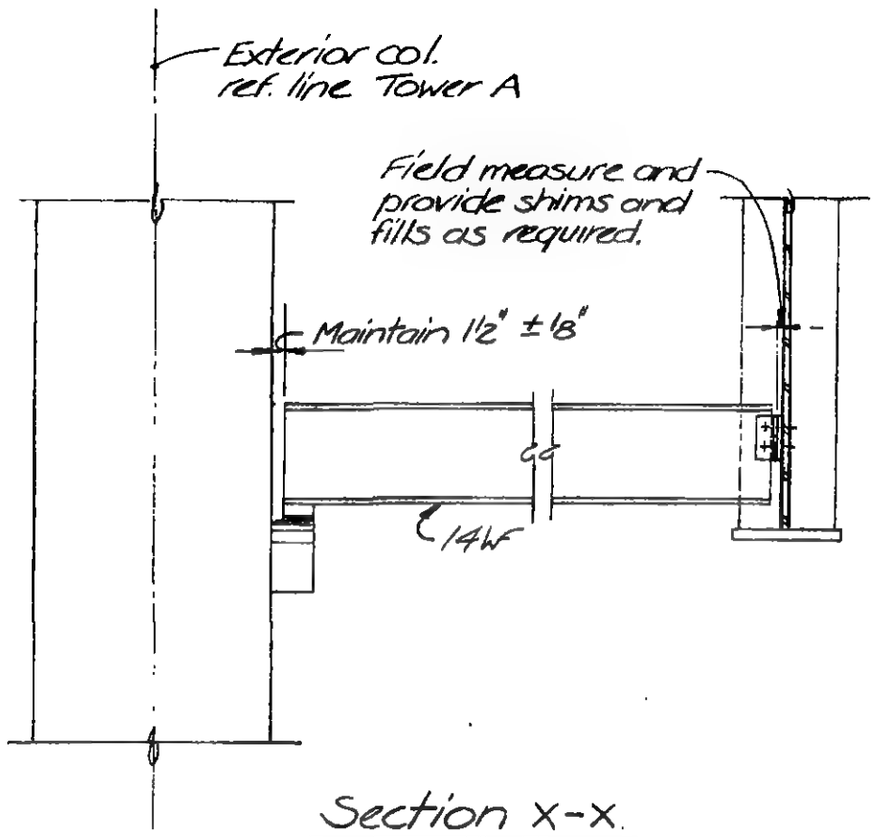

Section x-x

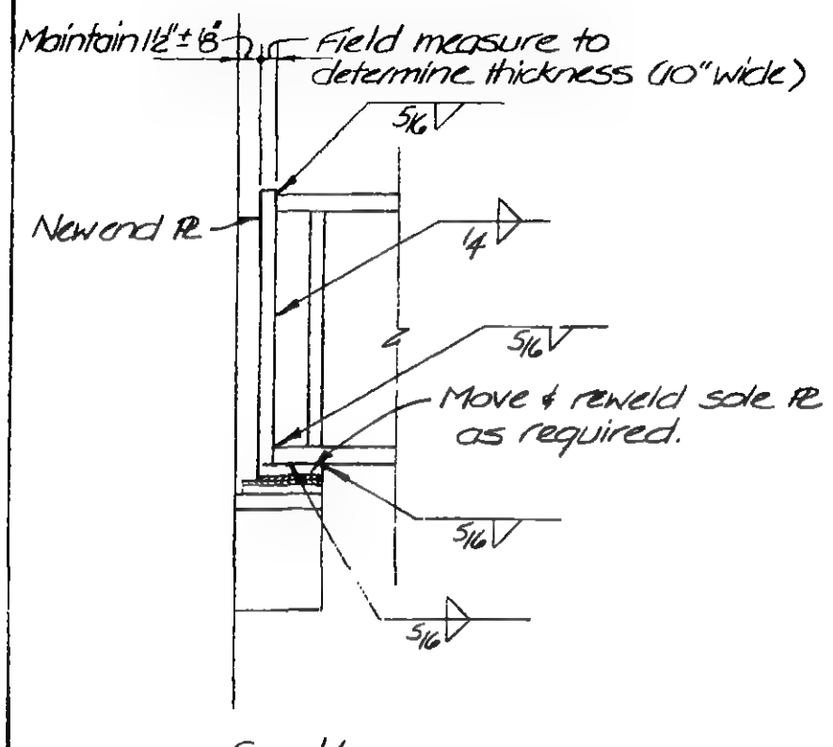

Section y-y

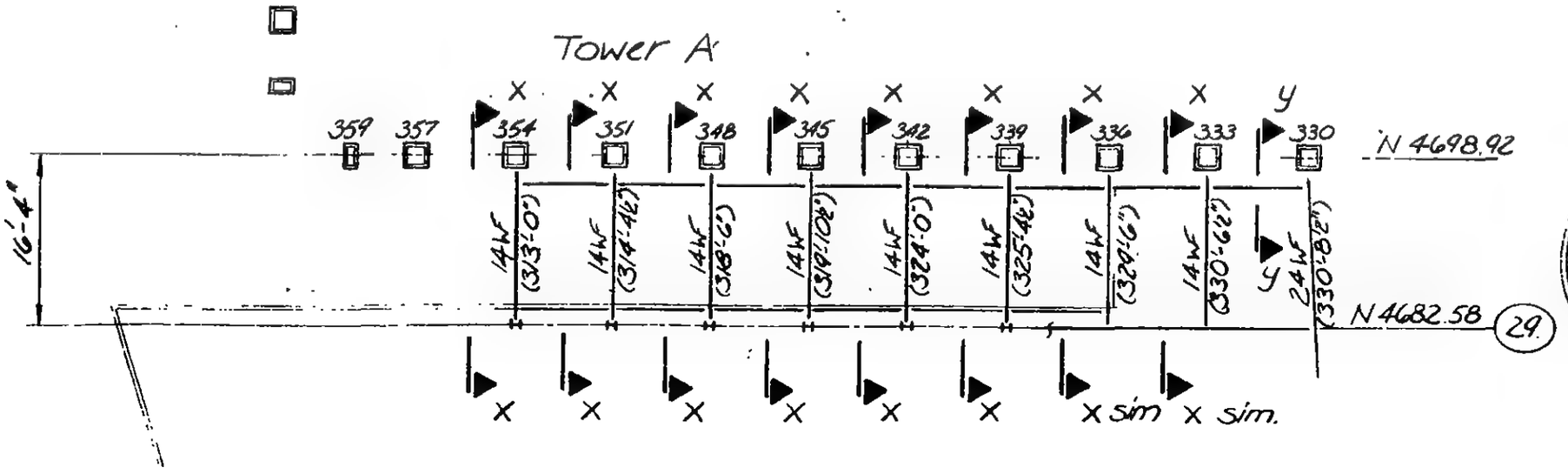

KEY PLAN

Refer Drawing SK-104

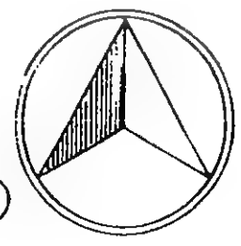

LICENSED PROFESSIONAL ENGINEER — LESLIE E. ROBERTSON — No. 34360 — UNIVERSITY OF THE STATE OF NEW YORK

DESIGNED

DRAWN J. Banks

REVIEWED

19-K-1078

SKILLING, HELLE, CHRISTIANSEN, ROBERTSON — Structural & Civil Engineers

PROJECT THE WORLD TRADE CENTER | TITLE HOLES IN BEAMS - EL. 320 MEZZANINE - ZONE K1 | DATE 8-16-73

REVISIONS

Note See SK-97 for basic plan.

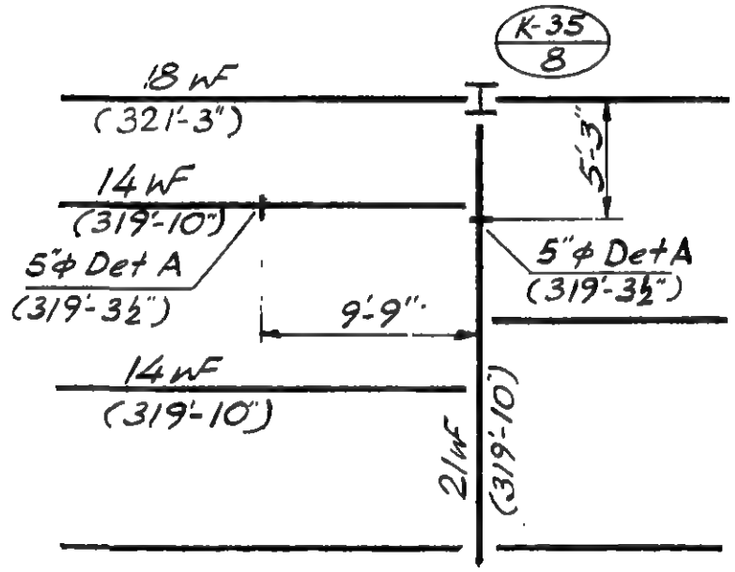

North

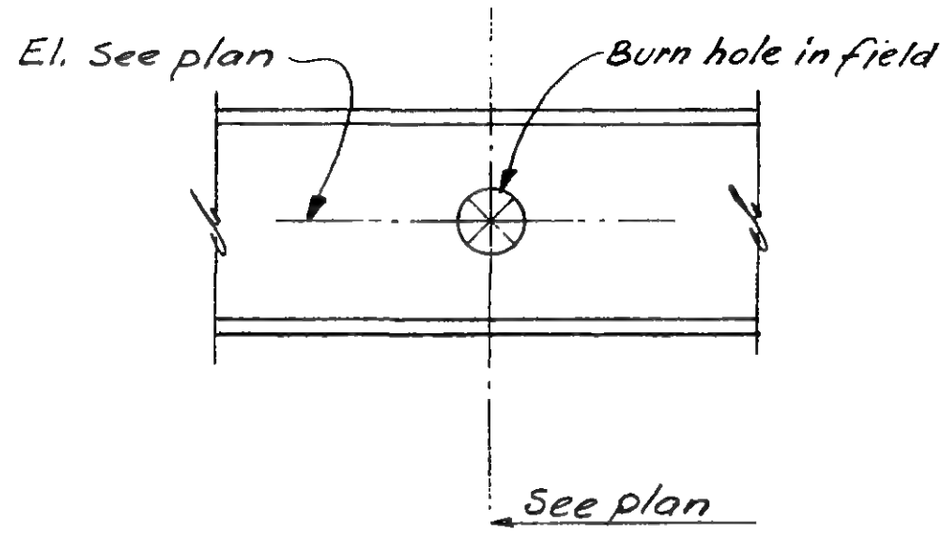

A

LICENSED PROFESSIONAL ENGINEER
LESLIE E. ROBERTSON
No. 34360
UNIVERSITY OF THE STATE OF NEW YORK

DESIGNED

DRAWN

REVIEWED

19-K-1079

SKILLING, HELLE, CHRISTIANSEN, ROBERTSON — Structural & Civil Engineers

PROJECT: THE WORLD TRADE CENTER | TITLE: REPAIR OF SLURRY WALL AT SE. P.B COLUMN BASES | DATE: 1-10-74

REVISIONS

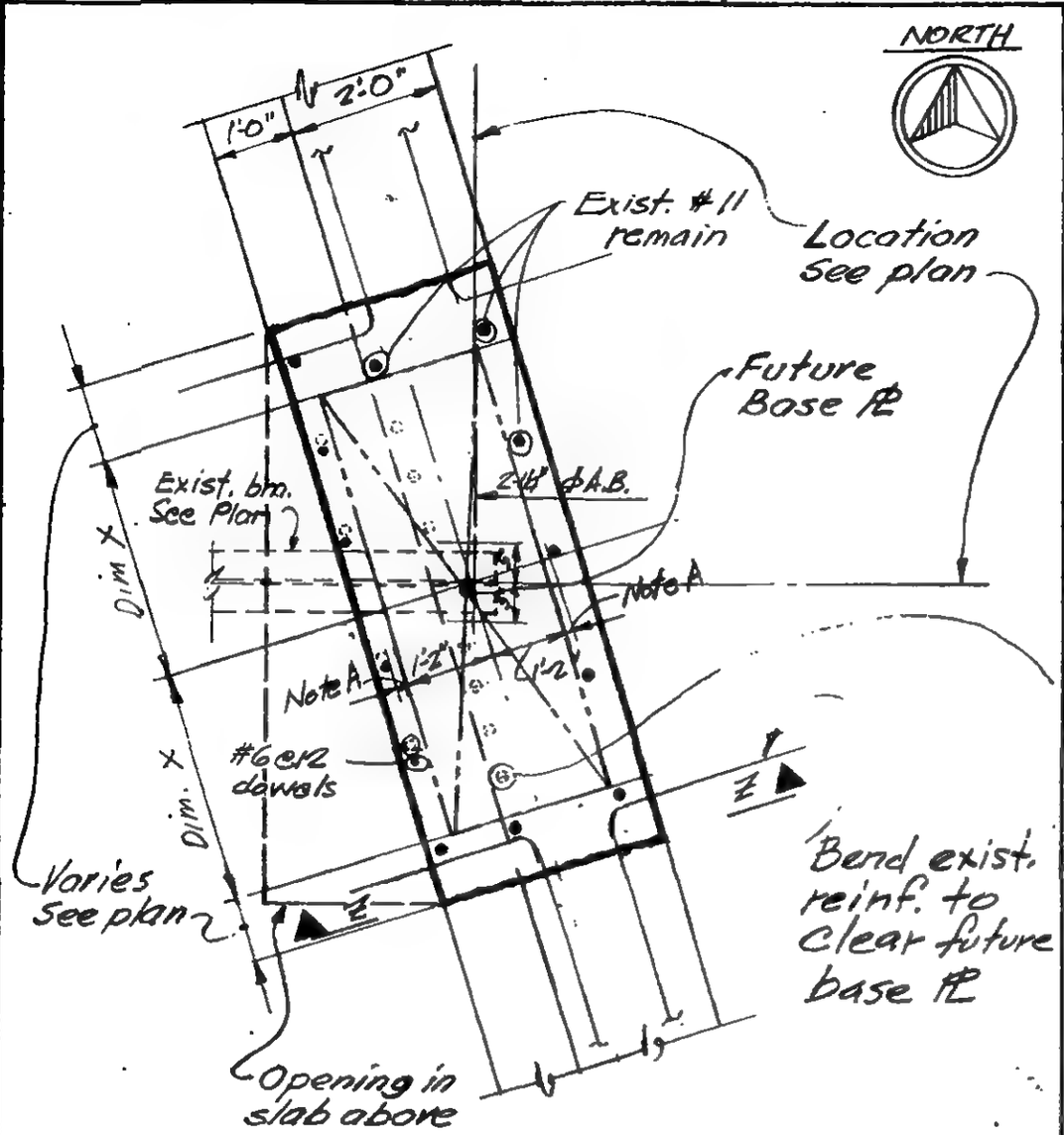

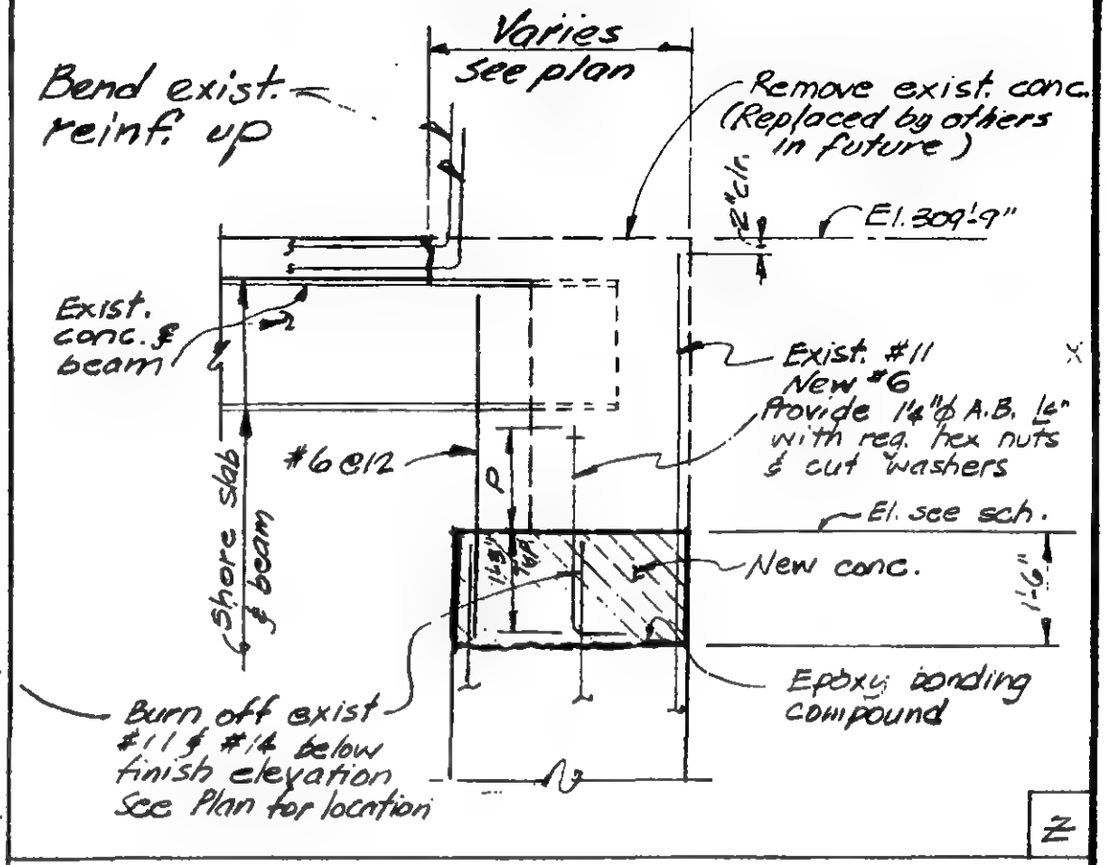

ANCHOR BOLT PROJECTION 'P'	ANCHOR BOLT THREAD	ELEVATION	DIMENSION 'X'	DET. No.
1-1½"	0'-11"	307'-2"	1'-4½"	A
1'-6½"	1'-4"	306'-5"	3'-7"	B
1'-1½"	0'-11	307'-1"	1'-9"	C
1'-1½"	0'-11	307'-0"	2'-0"	D
1'-1½"	0'-11	306'-2'	2'-6"	E
1'-1½"	0'-11	303'-6"	1'-7½"	F

Construction Sequence

1. Shore exist. slab and beam before removal of concrete. Maintain shores until approved by Engineer.
2. Remove existing concrete as shown in plan and Section Z-Z. without damage to exist. reinforcing.
3. Burn off #11 ℄ 14, see Plan ℄ Section Z-Z.
4. Roughend and clean entire surface of exist. conc. which will come in contact with new concrete.
5. Place #6 ℄ 1'-6" ϕ Anchor Bolts, see Plan for location.
6. Coat entire surface of existing concrete with approved epoxy bonding compound.
7. Cast wall to elevation in schedule using approved "non-shrink" f'c = 4000 psi. concrete.

Notes:

★ Maintain 1" clearance between vert. reinf bars and 1'-2" dimension given in plan. Where #11 bars encroaches upon 1'-2" dimension, burn off #11 bars below finish wall elevation and lap #6 @ 12 with #11.

LICENSED PROFESSIONAL ENGINEER — LESLIE E. ROBERTSON — No. 34980 — UNIVERSITY OF THE STATE OF NEW YORK

DESIGNED

DRAWN MLB

REVIEWED WOB

19-K 1080

SKILLING, HELLE, CHRISTIANSEN, ROBERTSON — Structural & Civil Engineers

PROJECT THE WORLD TRADE CENTER | TITLE REPAIR DETAIL FOR BEAM ENDS - EL. 332, ZONE K3 | DATE 1-9-74

REVISIONS

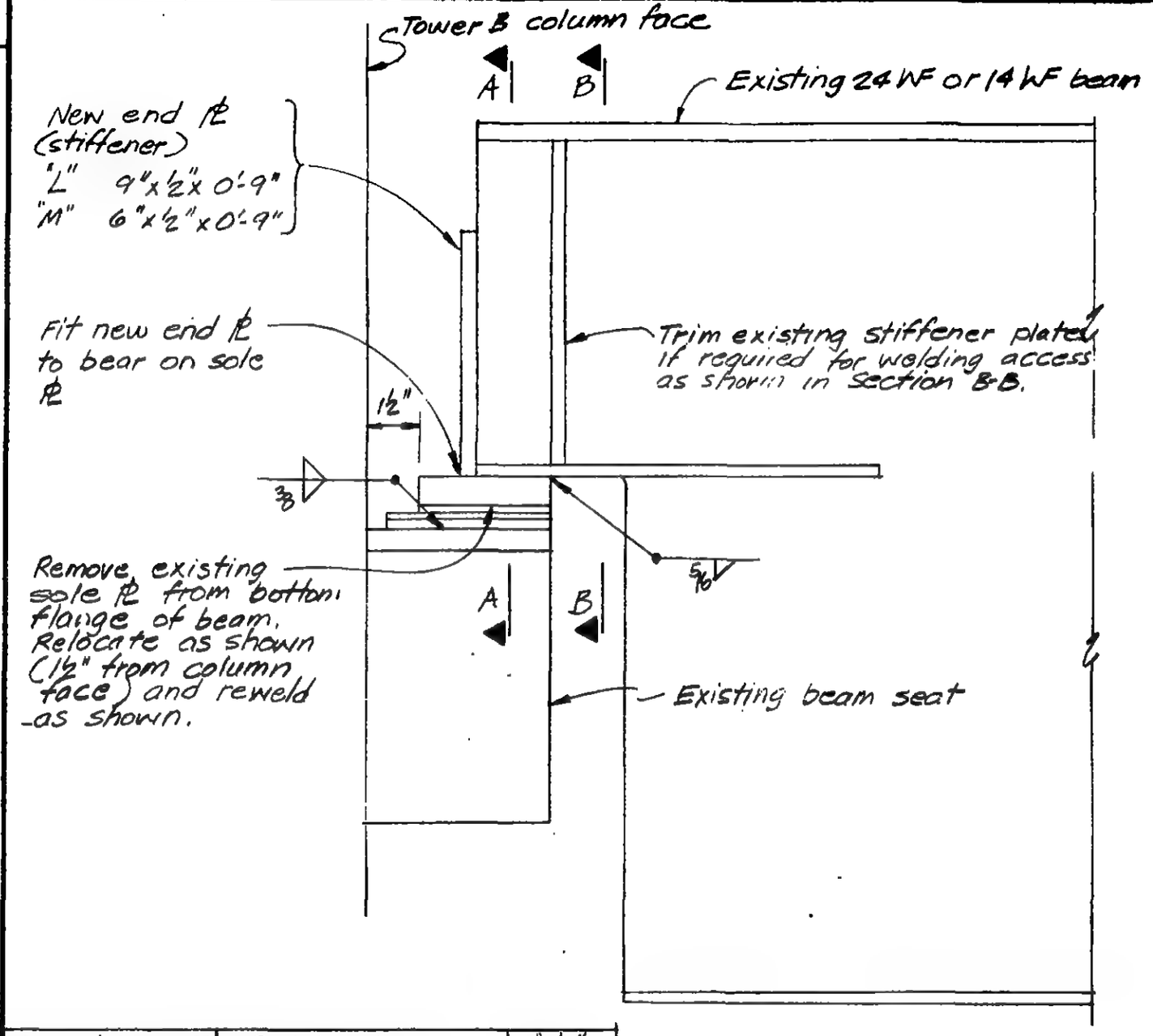

Elevation View Looking South

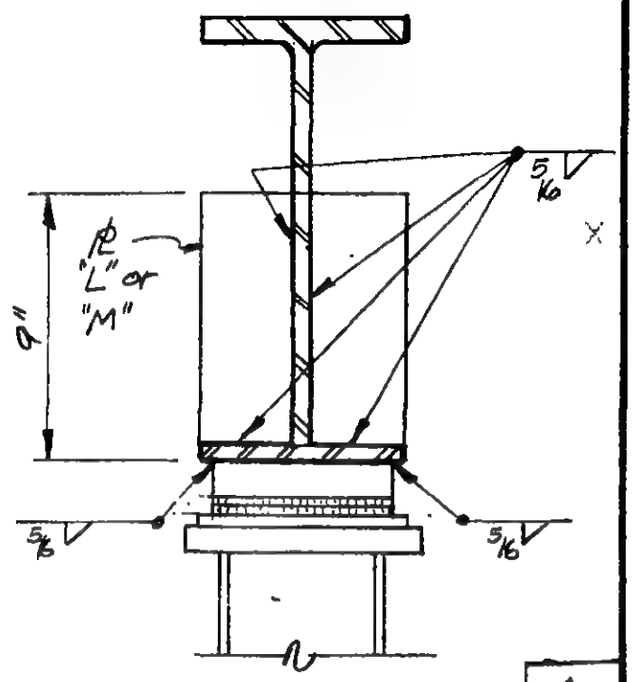

A

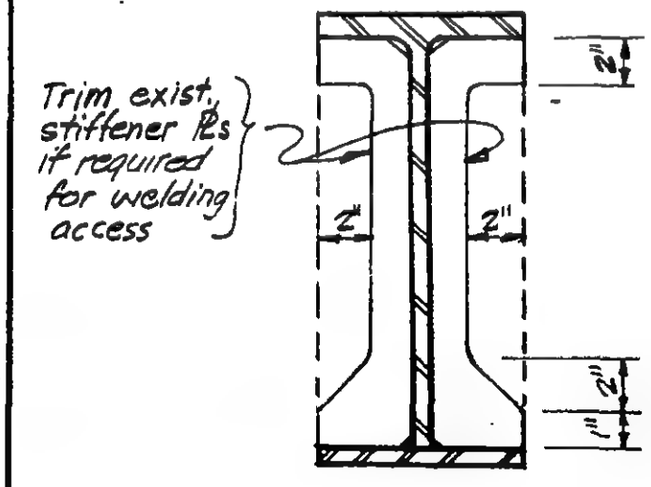

B

COLUMN NUMBER	BEAM NUMBER	"Pl"
159 - B	B - 6101	L
157 - B	B - 6097	L
154 - B	B - 6098	L
151 - B	B - 6100	L
148 - B	B - 6099	L
145 - B	B - 6098	L
142 - B	B - 6102	L
139 - B	B - 6198	M
136 - B	B - 6194	M
133 - B	B - 6240	M

LICENSED PROFESSIONAL ENGINEER — LESLIE E. ROBERTSON — No. 34360 — UNIVERSITY OF THE STATE OF NEW YORK

DESIGNED AR

DRAWN

REVIEWED JTM

19-K-1081

SKILLING, HELLE, CHRISTIANSEN, ROBERTSON — Structural & Civil Engineers

PROJECT: THE WORLD TRADE CENTER | TITLE: EL. 332, ZONE K-5, REPAIR AT E. FACE OF COL. K-57/4 | DATE: 1-9-74

REVISIONS

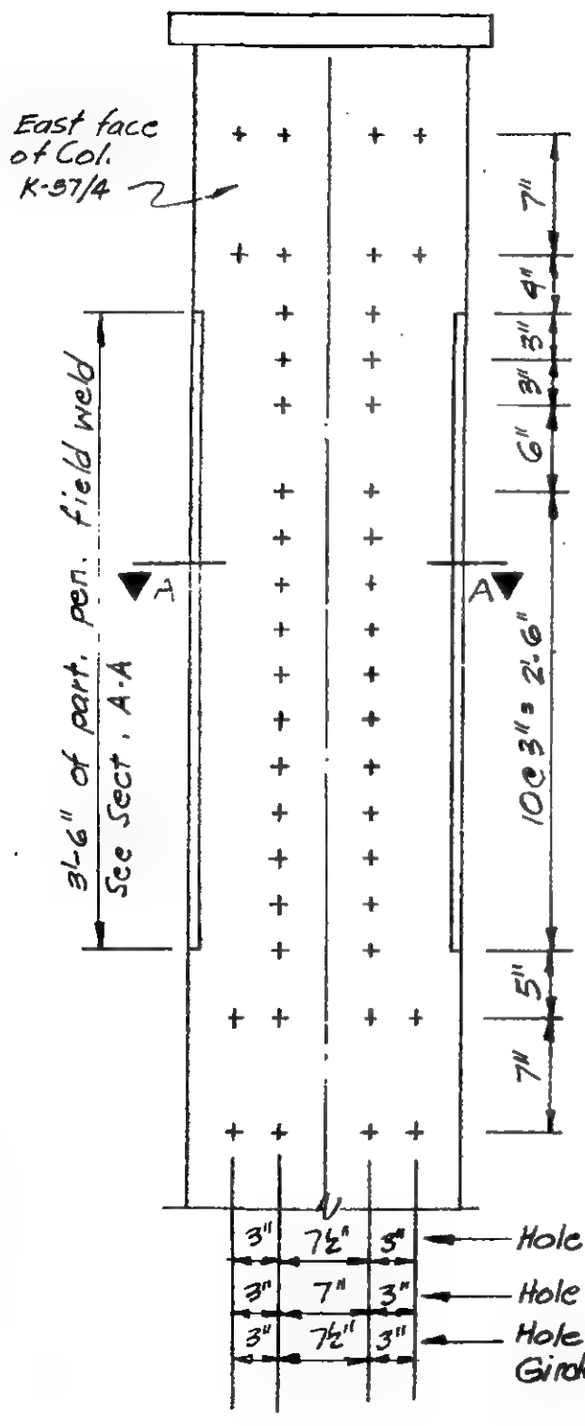

3" 7½" 3" — Hole spacing as detailed Col. K-57/4

3" 7" 3" — Hole spacing as fabricated Col. K-57/4

3" 7½" 3" — Hole spacing as detailed and fabricated - Girder G571

Procedure for repair of non-matching gauge distances, West end of ℄ girder (G571) to east flange of column (K-57/4)

1. Install ⅞" drift pins to position center-line of girder to align with center-line of column
2. Chase ream holes to 1⅛".
3. Install all bolts (use A490F in lieu of A490-X) using one only XH9 washer under bolt head and nut and tighten.
4. Preheat to 300° minimum temperature areas shown on this drawing (i.e. areas to be welded with partial penetration weld.)
5. Using arc-air gouge, remove metal to depth and configuration as shown on this drawing. IMPORTANT NOTE - CARE MUST BE TAKEN TO ASSURE THAT BEVEL IS TO DEPTH SHOWN AND NO GREATER.
6. Maintain preheat and interpass temperature at 225° minimum and weld using E70 XX low hydrogen electrodes.
7. Weld on each side of the joint should be made prior to completion of days work.
8. Care must be taken to allow for slow cooling of weld metal (ie. cover with asbestos blanket, etc.)

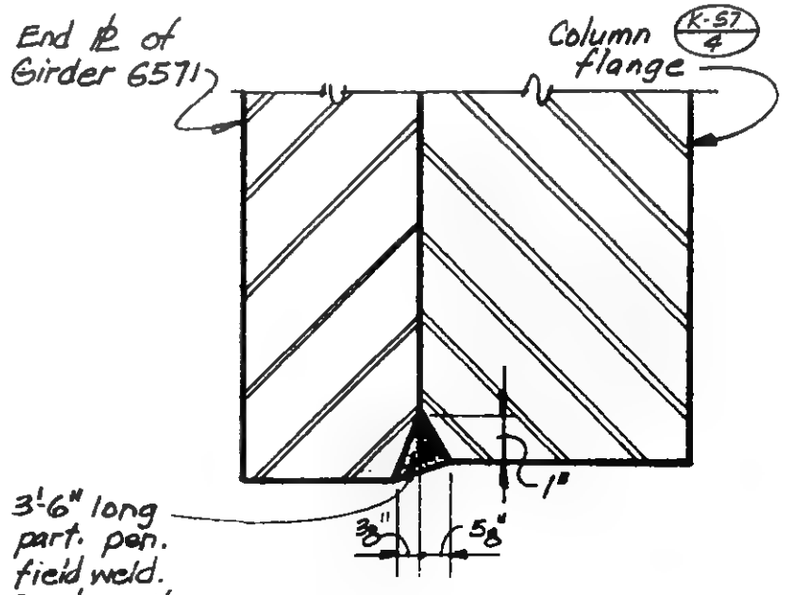

A

19-K-1082

LICENSED PROFESSIONAL ENGINEER — LESLIE E. ROBERTSON — No. 34360 — UNIVERSITY OF THE STATE OF NEW YORK

DESIGNED AR

DRAWN

REVIEWED JTM

SKILLING, HELLE, CHRISTIANSEN, ROBERTSON — Structural & Civil Engineers

PROJECT: THE WORLD TRADE CENTER

TITLE: EL. 332, ZONE K-5, REPAIR AT WEST FACE OF COL. (K-55/5)

DATE: 1-9-74

REVISIONS

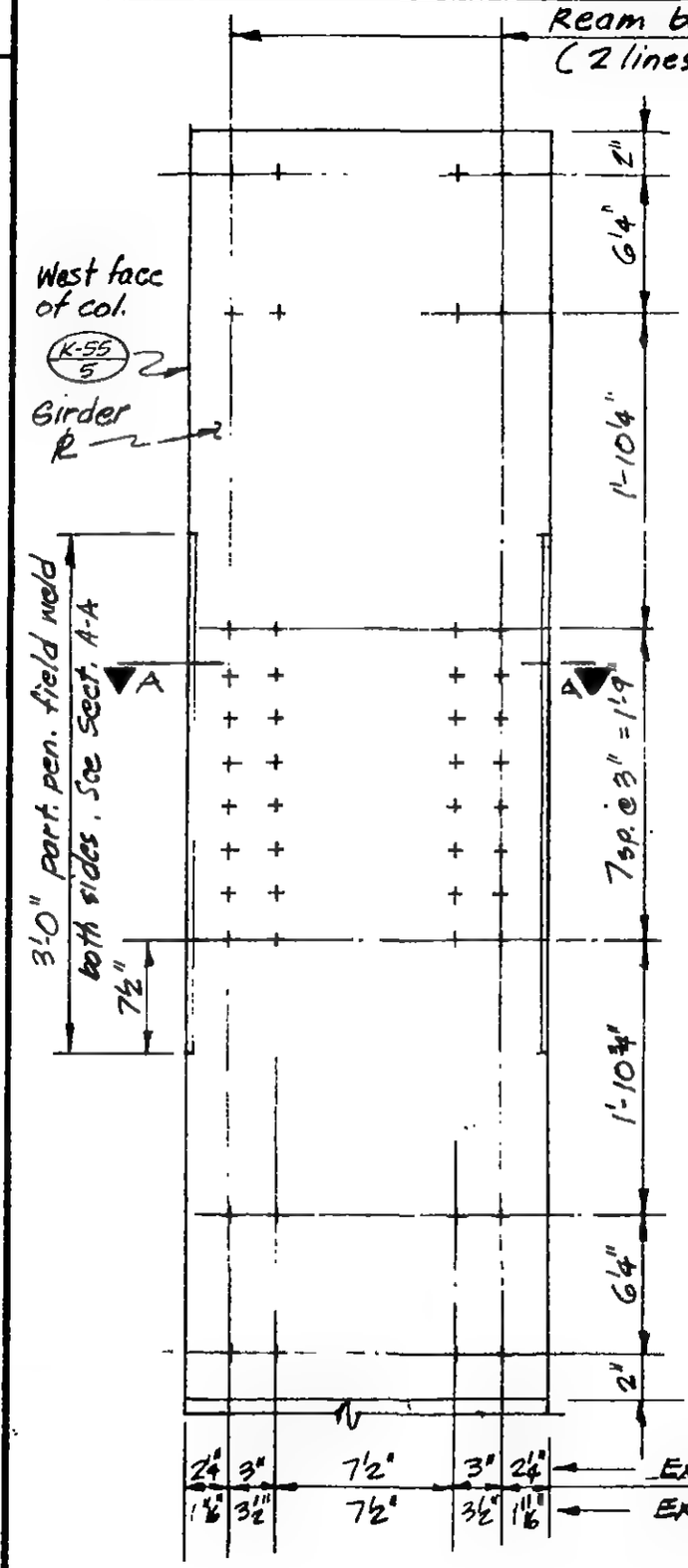

Procedure for repair of non-matching gauge distances, East end of ℄ girder (G509) to west flange of column (K-55/5)

1. Install A-490-X bolts in all "fair" holes (i.e. install all bolts that will "make"). Tighten bolts.
2. Chase ream remaing holes to 1'8".
3. Install all remaining bolts (in reamed holes) using A490F in lieu of A490-X & one XH9 washer under bolt head and nut and tighten
4. Preheat to 300° minimum temperature areas shown on this drawing (i.e. areas to be welded with partial penetration field weld.)
5. Using arc-air gouge remove metal to depth and configuration as shown on this drawing. IMPORTANT NOTE - CARE MUST BE TAKEN TO ASSURE THAT BEVEL IS TO DEPTH SHOWN AND NO GREATER.
6. Maintain preheat and interpass temperature at 225° minimum and weld using E70 XX low hydrogen electrodes.
7. Weld on each side of the joint should be made prior to completion of days work.
8. Care must be taken to allow for slow cooling of weld metal (i.e. cover with asbestos blanket, etc.)

Refer to 13-K2.4-14C for details not shown on this sheet.

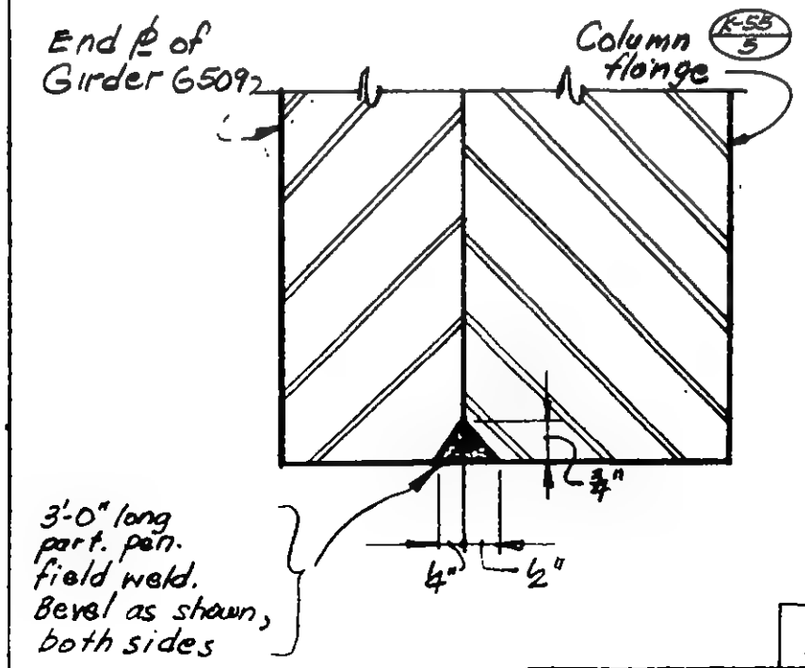

LICENSED PROFESSIONAL ENGINEER — LESLIE E. ROBERTSON — No. 34960 — UNIVERSITY OF THE STATE OF NEW YORK

DESIGNED AK

DRAWN

REVIEWED JTM

A

19-K-1083

SKILLING, HELLE, CHRISTIANSEN, ROBERTSON — Structural & Civil Engineers

PROJECT: THE WORLD TRADE CENTER | TITLE: EL. 294; ZONE K-5, REPAIR AT BEAM NEAR COL. (K-51/5) | DATE: 1-9-74

REVISIONS

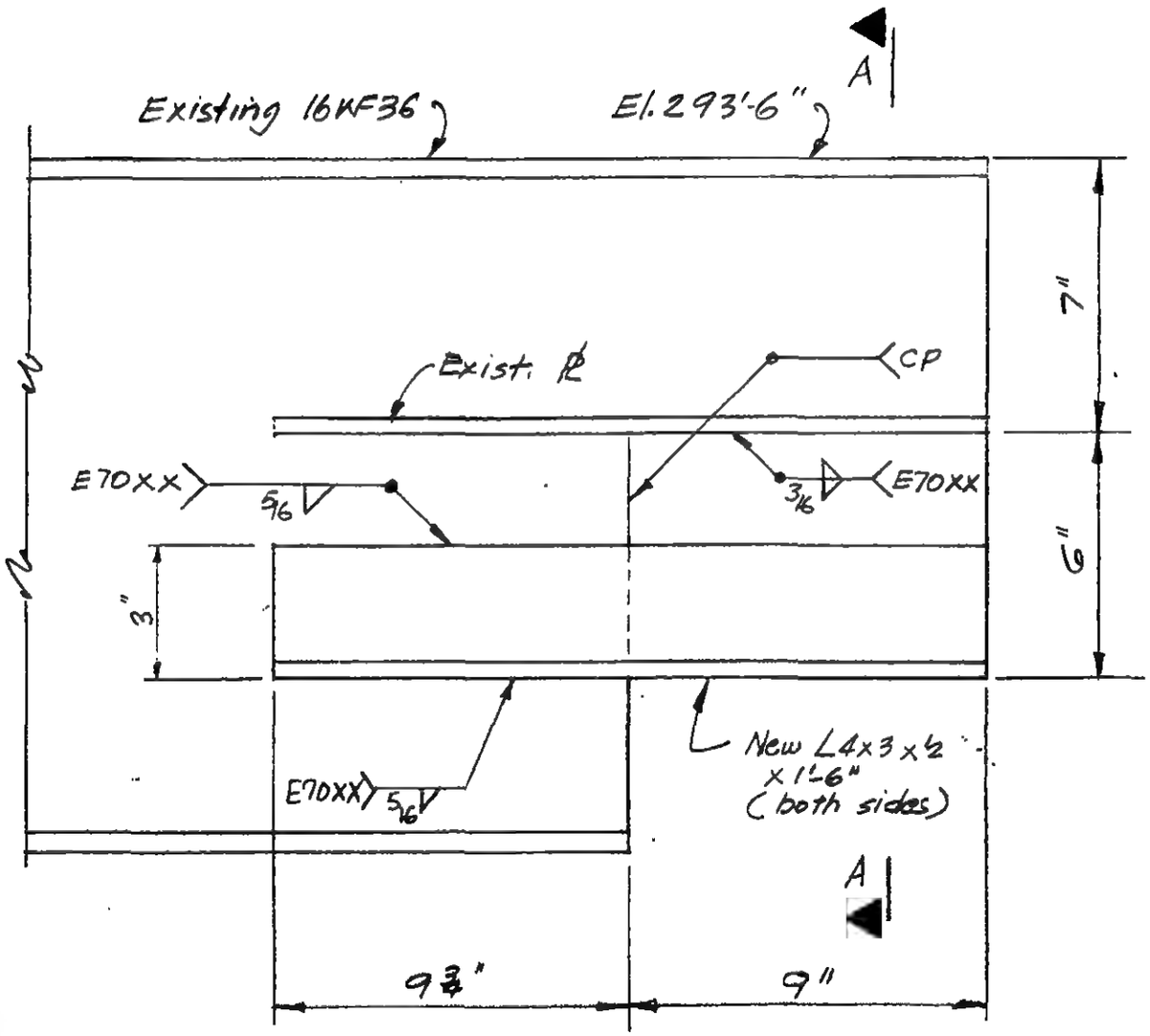

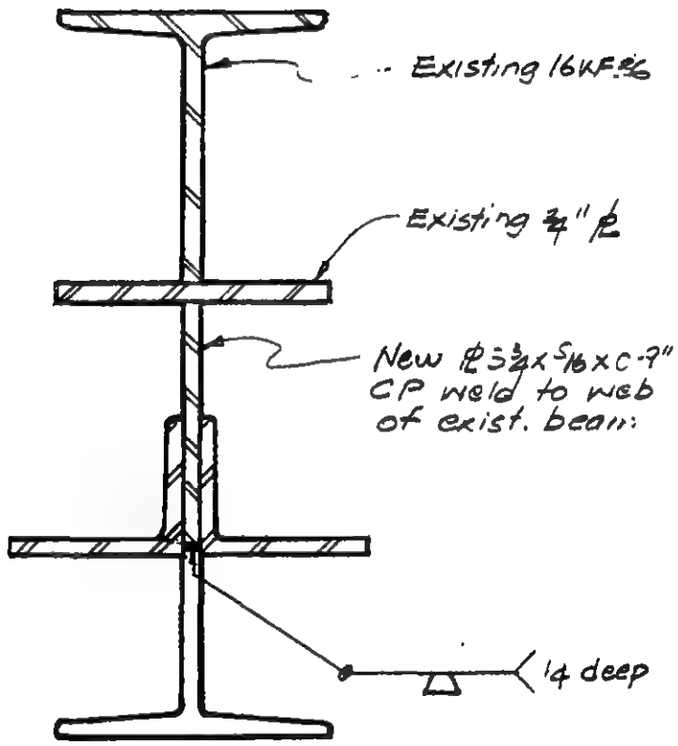

LICENSED PROFESSIONAL ENGINEER — LESLIE E. ROBERTSON — No. 34360 — UNIVERSITY OF THE STATE OF NEW YORK

DESIGNED AK

DRAWN

REVIEWED JTM

Refer to Levinson Shop Drawing #V3302

ELEVATION - NORTH END - BEAM B7014

A

19-K-1084

SKILLING, HELLE, CHRISTIANSEN, ROBERTSON — Structural & Civil Engineers

PROJECT THE WORLD TRADE CENTER

TITLE REPAIR DETAIL FOR MISLOCATED HANGER EL 332, ZONE K-3, 4'-6" NORTH OF COL. (K-51)

DATE 1-29-74

REVISIONS

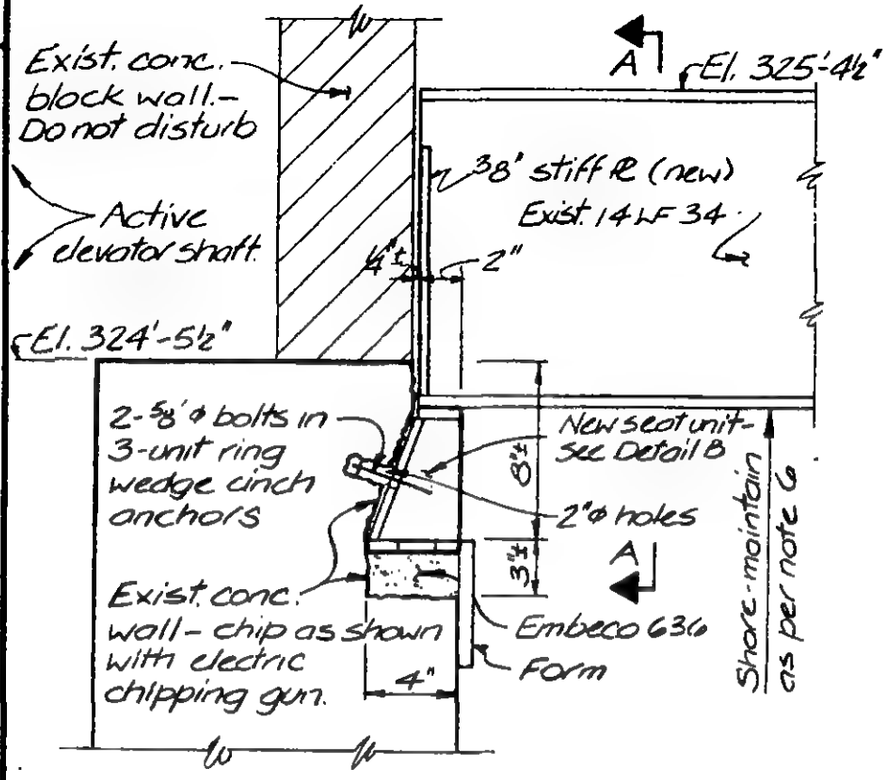

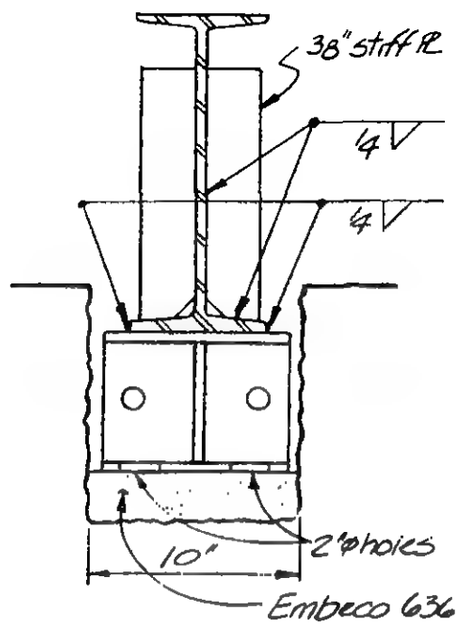

A

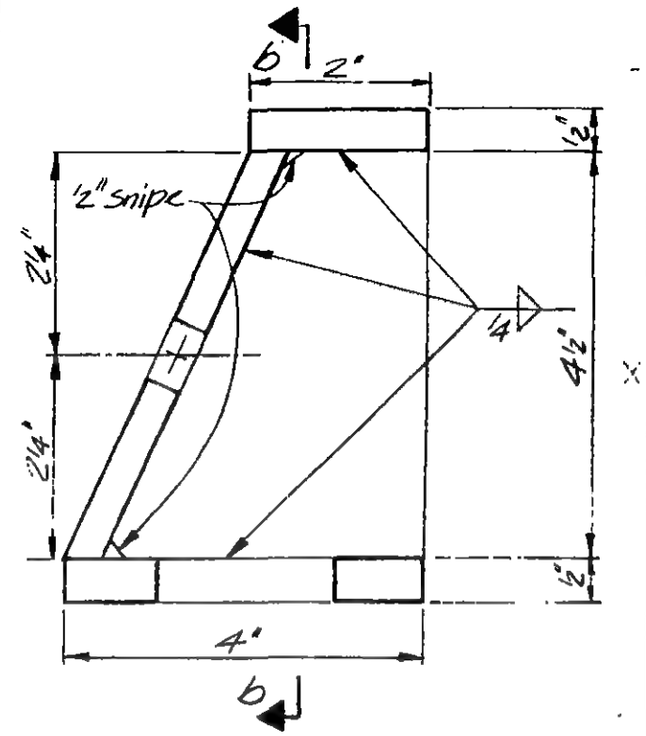

B

After seat unit has been welded to bottom flanges of the 14 WF 34 -

1. Place form.
2. Pour flowable mix of Embeco 636 thru 2"ø holes in bottom plate of seat unit.
3. Rod Embeco thoroughly to insure firm bearing
4. Insert 2-⅝"ø bolts through 13/16"ø holes in back plate into cinch anchors and hand tighten. (Note: Holes for cinch anchors can be drilled prior to welding seat unit to bottom flange of beam. Seat unit can be used as a template to locate holes to be drilled.)
5. Fill space between chipped existing concrete wall and back plate of seat unit with Embeco 636. (Tamp sides to prevent flowing out.)
6. Allow to set for 48 hours before removing shoring from under existing 14 WF 34.
7. Cut off existing mislocated hanger 1" below bottom flange of existing 30WF116

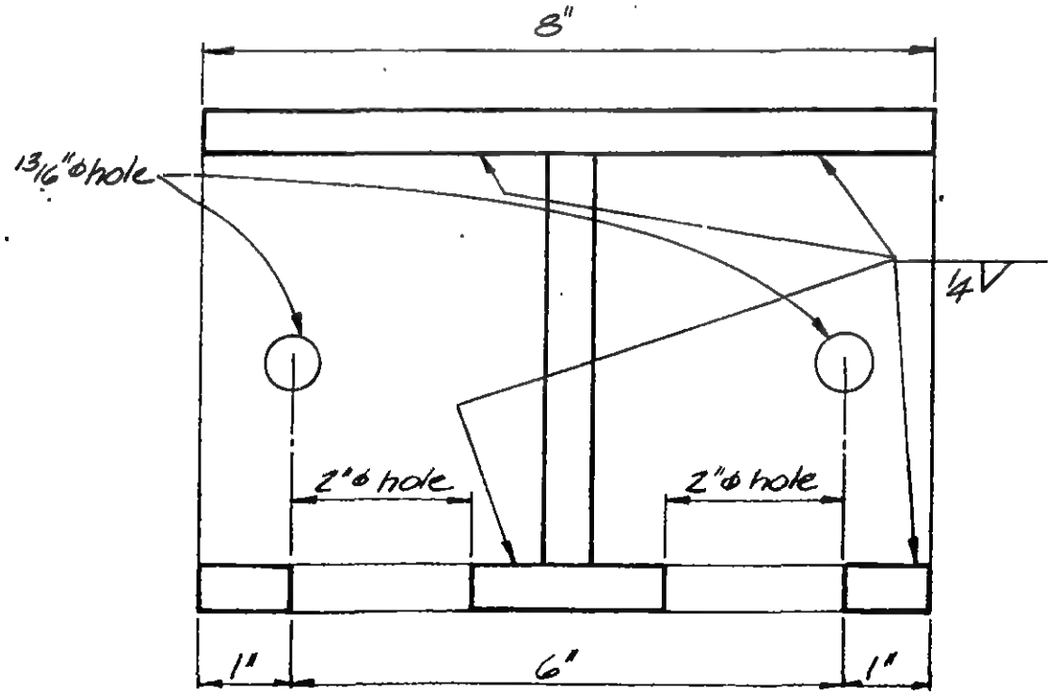

All plates to be ½" thick ASTM-A36

LICENSED PROFESSIONAL ENGINEER — LESLIE E. ROBERTSON — No. 34960 — UNIVERSITY OF THE STATE OF NEW YORK

DESIGNED L.E.L., A.R., J.T.M.,

DRAWN J.B.

REVIEWED

6

19-K-1085

SKILLING, HELLE, CHRISTIANSEN, ROBERTSON — Structural & Civil Engineers

PROJECT: THE WORLD TRADE CENTER

TITLE: REPAIR DETAIL AT TOP OF 14WF202 DIAGONALS, EL.352, ZONE K-3, WEST OF COLUMNS K-45/2 & K-47/2

DATE: 1-31-74

REVISIONS

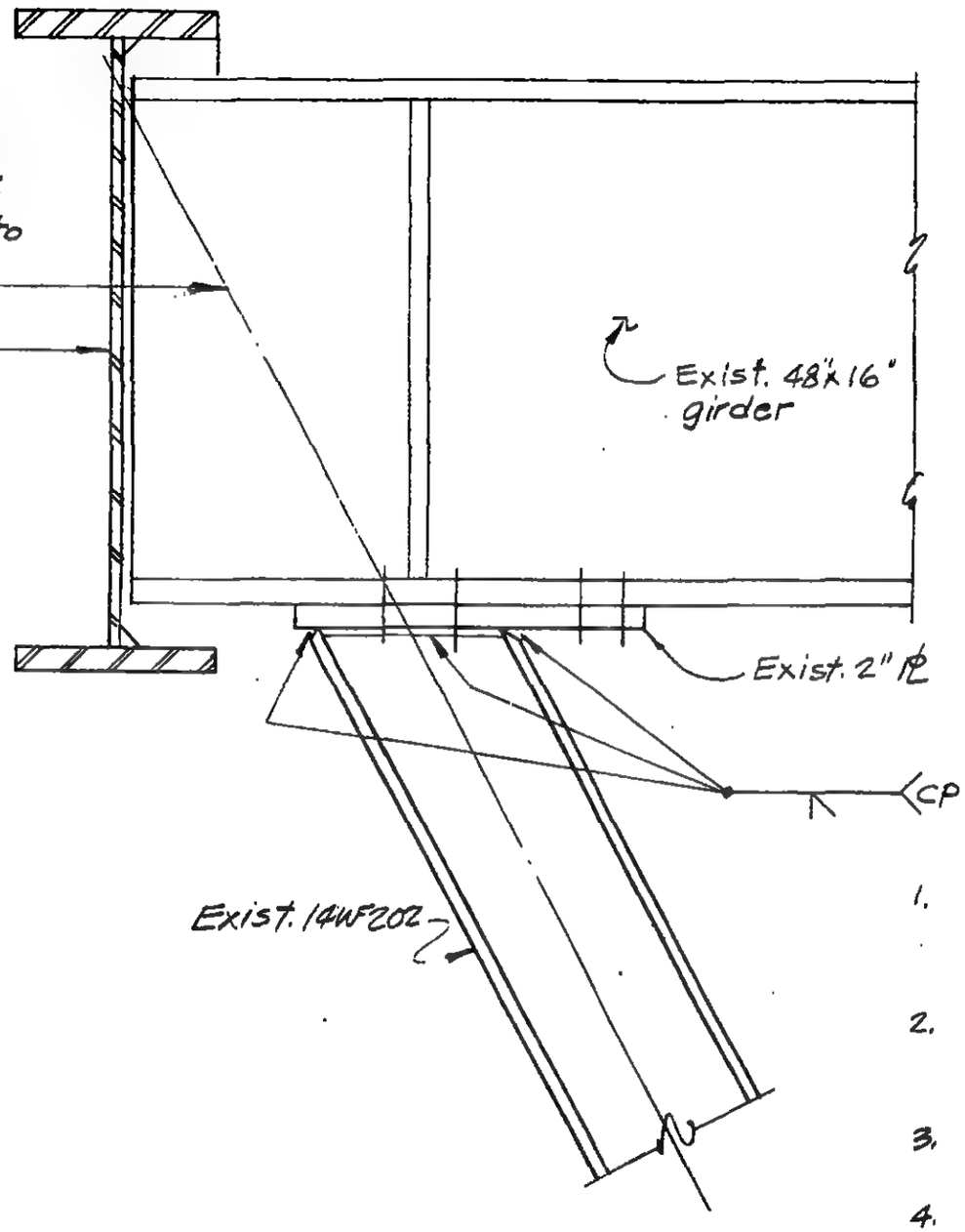

SEQUENCE OF WORK

1. Remove 2" PL from 14WF202 by carbon arc gouging existing fillet weld.
2. Bolt 2" plate to bottom flange of 48"x16" PL as shown on 13-K5.3-1.1 .
3. Single bevel web and flanges of 14WF202.
4. Complete penetration weld 14WF202 to 2" plate.
5. Maintain all working points and worklines as shown on 13-K5.3-1.1.
6. This detail occurs at two locations - west of columns (K-45/2) & (K-47/2)

LICENSED PROFESSIONAL ENGINEER — LESLIE E. ROBERTSON — No. 34360 — UNIVERSITY OF THE STATE OF NEW YORK

DESIGNED: AR

DRAWN:

REVIEWED: JTM

19-K-1086

SKILLING, HELLE, CHRISTIANSEN, ROBERTSON — Structural & Civil Engineers

PROJECT: THE WORLD TRADE CENTER

TITLE: REPAIR DETAIL AT SOUTH END OF 24 WF100 EL. 332, ZONE K-5 AT NORTH FACE OF COLUMN, K-55/3

DATE: 1-31-74

REVISIONS

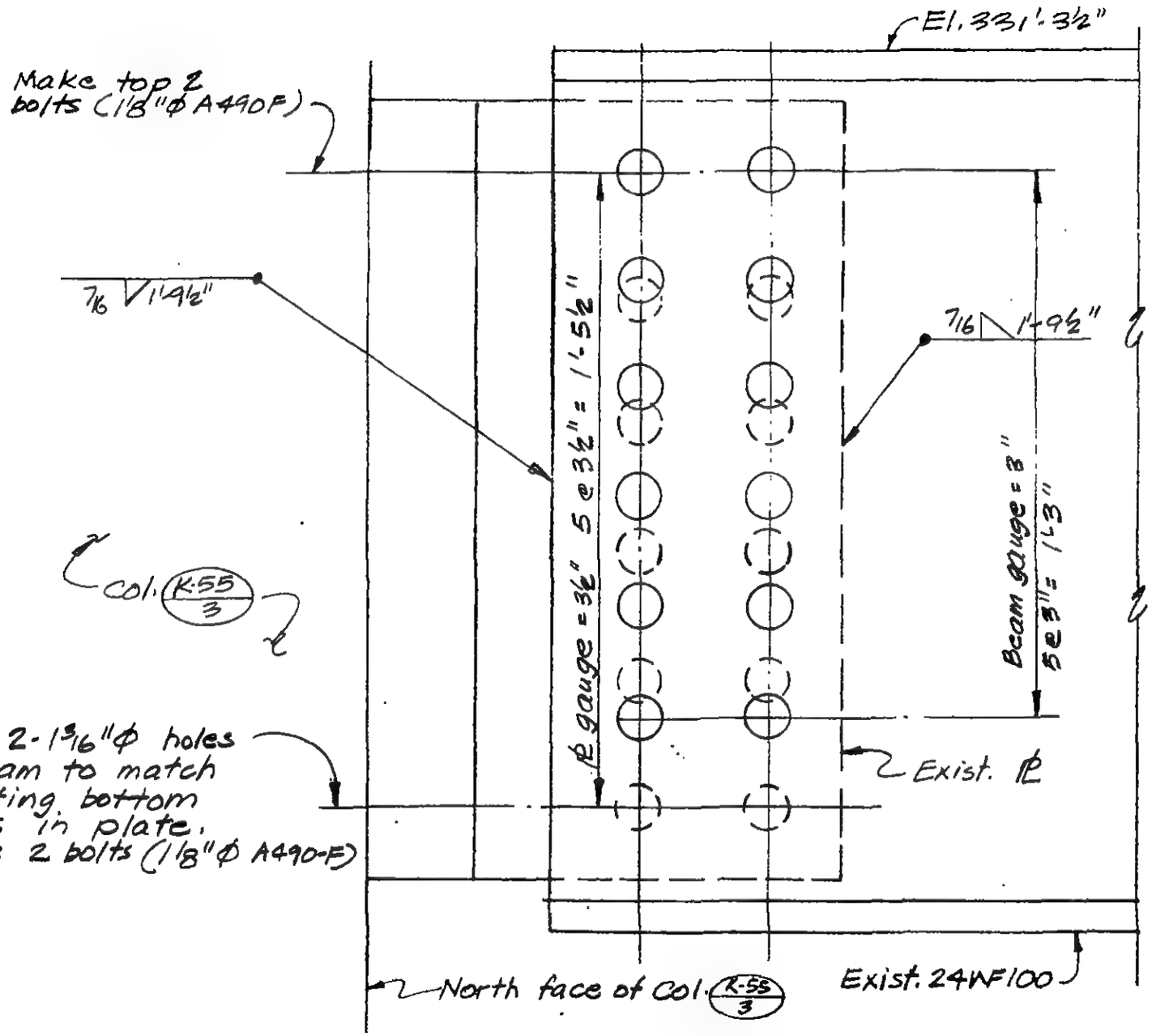

NOTE: Make bolts (2 top and 2 bottom bolts before welding)

LICENSED PROFESSIONAL ENGINEER — LESLIE E. ROBERTSON — No. 34360 — UNIVERSITY OF THE STATE OF NEW YORK

DESIGNED: AR

DRAWN: mikelli

REVIEWED: JTM

19-K-1087

SKILLING, HELLE, CHRISTIANSEN, ROBERTSON — Structural & Civil Engineers

PROJECT: THE WORLD TRADE CENTER

TITLE: REPAIR DETAIL AT CRACKED PLATE ON NORTH END OF 65'x24' GIRDER JUST NORTH OF COL. M-4/11, EL. 332, ZONE K-5

DATE: 1-31-74

REVISIONS

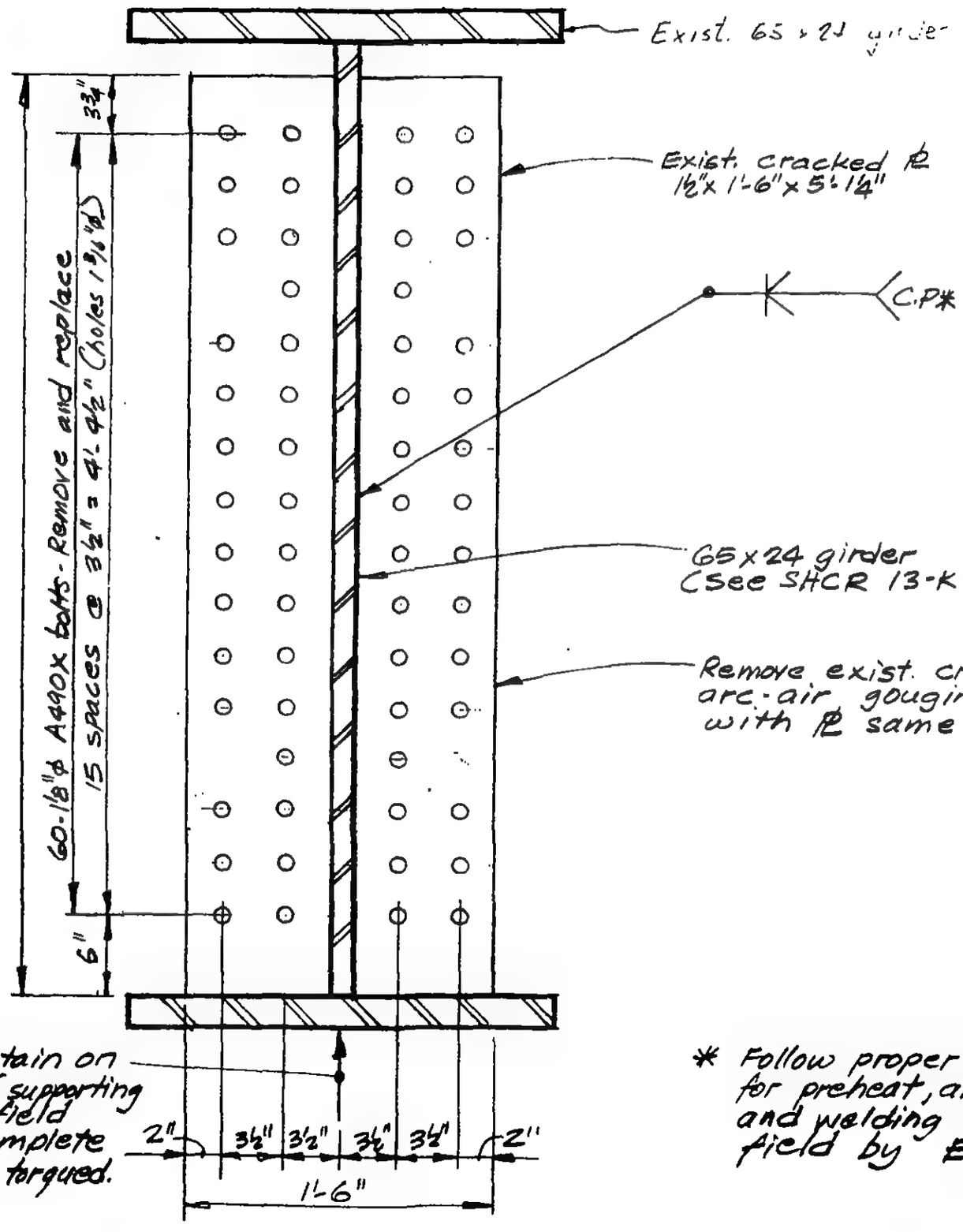

* Follow proper procedure for preheat, arc-air gouging, and welding as directed in field by Engineer.

SECTION LOOKING NORTH

LICENSED PROFESSIONAL ENGINEER — LESLIE E. ROBERTSON — No. 34360 — UNIVERSITY OF THE STATE OF NEW YORK

DESIGNED: AR

DRAWN:

REVIEWED: JTM

19-K-1088

SCALE

REVISIONS

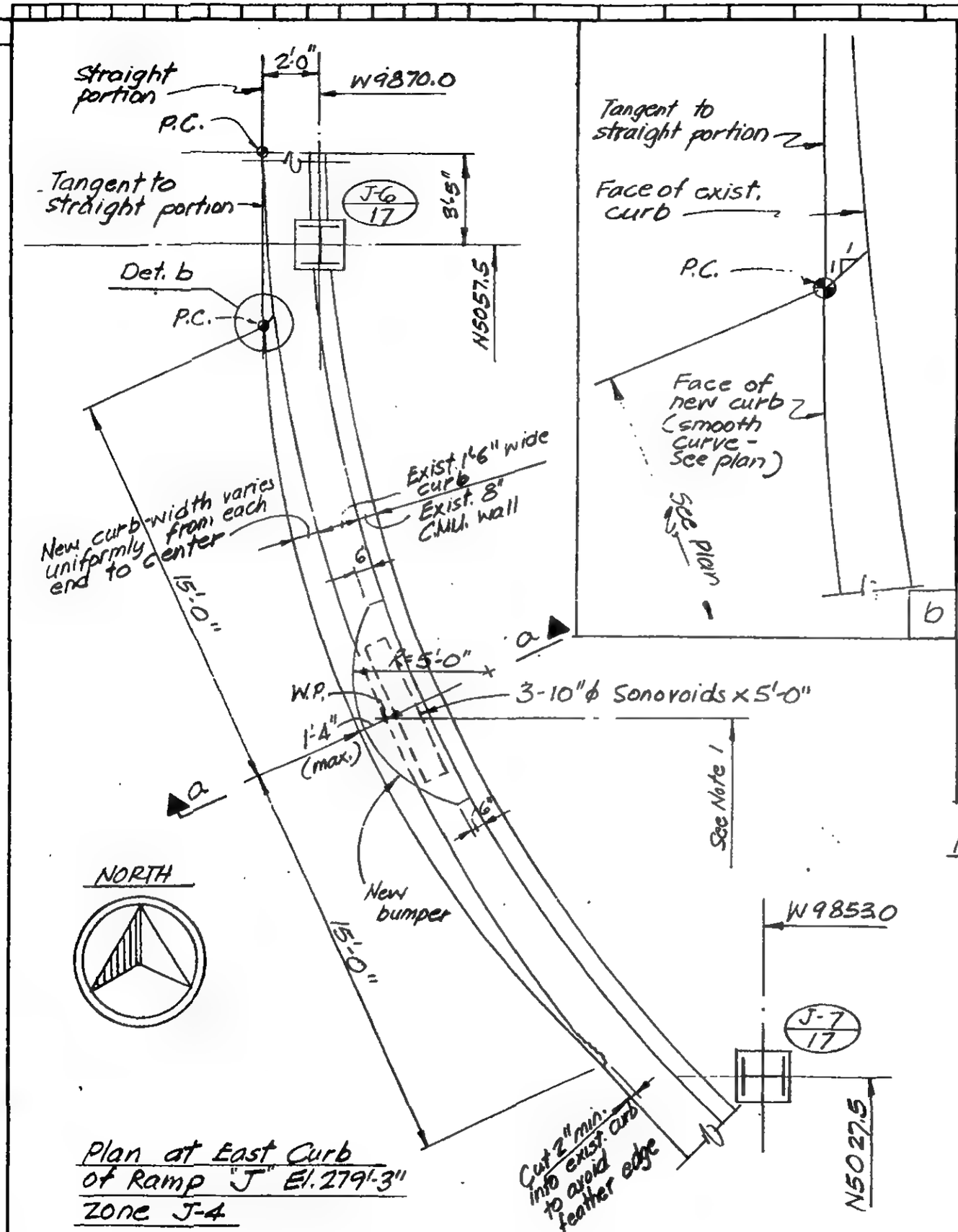

Plan at East Curb of Ramp "J" El. 279'-3" Zone J-4

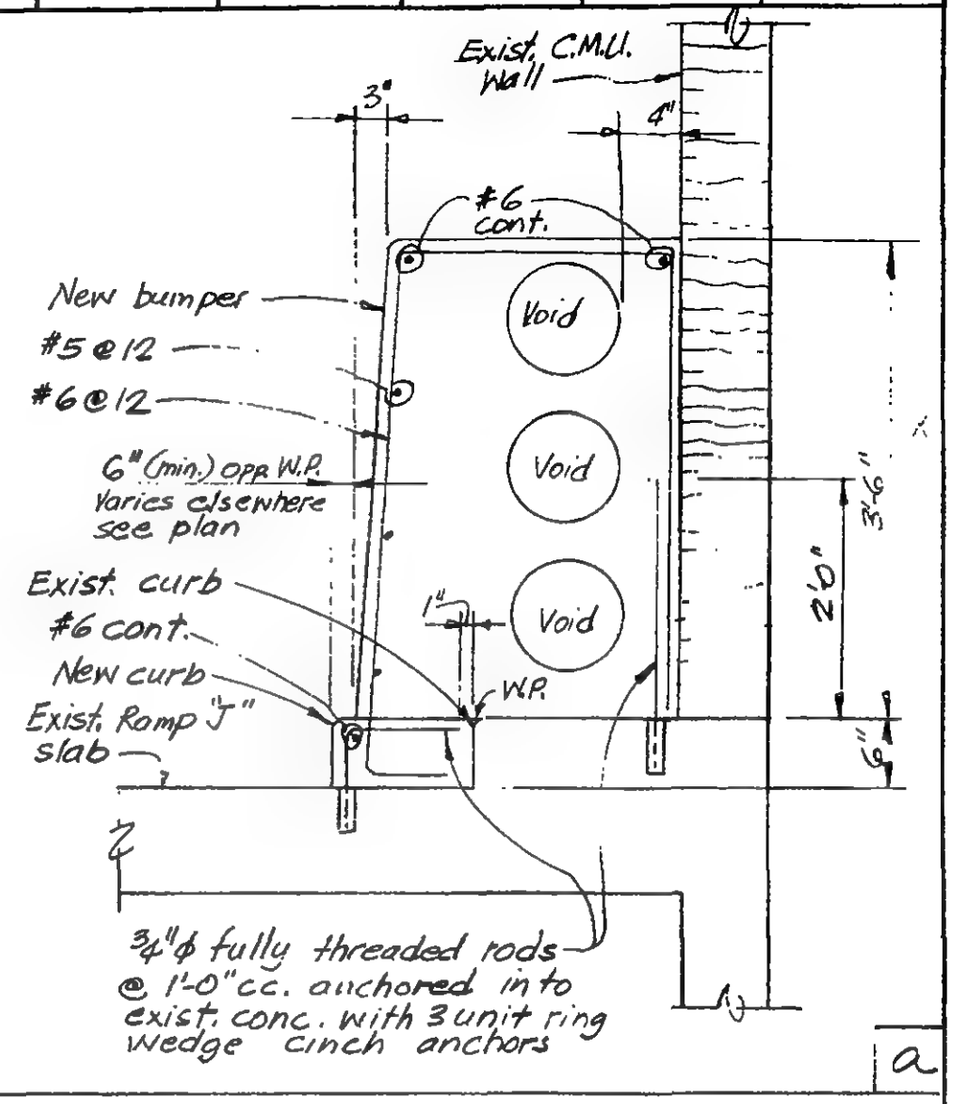

Notes:

1. Locate W.P. of new curb and bumper directly below location of electrical conduits above ramp as directed by PANY & NJ / WTC Construction Dept. This occurs at approx. N5041.
2. Roughen and clean all areas of exist. ramp slab and curb which abut new curb and bumper. Apply epoxy bonding compound to these areas before casting new curb and bumper.

DESIGNED JTM	PROJECT THE WORLD TRADE CENTER	TITLE NEW CURB AND BUMPER RAMP J	DATE 2-1-74
DRAWN [illegible]	SKILLING, HELLE, CHRISTIANSEN, ROBERTSON	Structural & Civil Engineers	DWG. NO 19-J-1089
REVIEWED WAP			

SKILLING, HELLE, CHRISTIANSEN, ROBERTSON — Structural & Civil Engineers

PROJECT THE WORLD TRADE CENTER | TITLE REPAIR DET., BASE PL TO GIRDER CONN., COL. H4/9, EL. 332 | DATE 2-28-74

REVISIONS

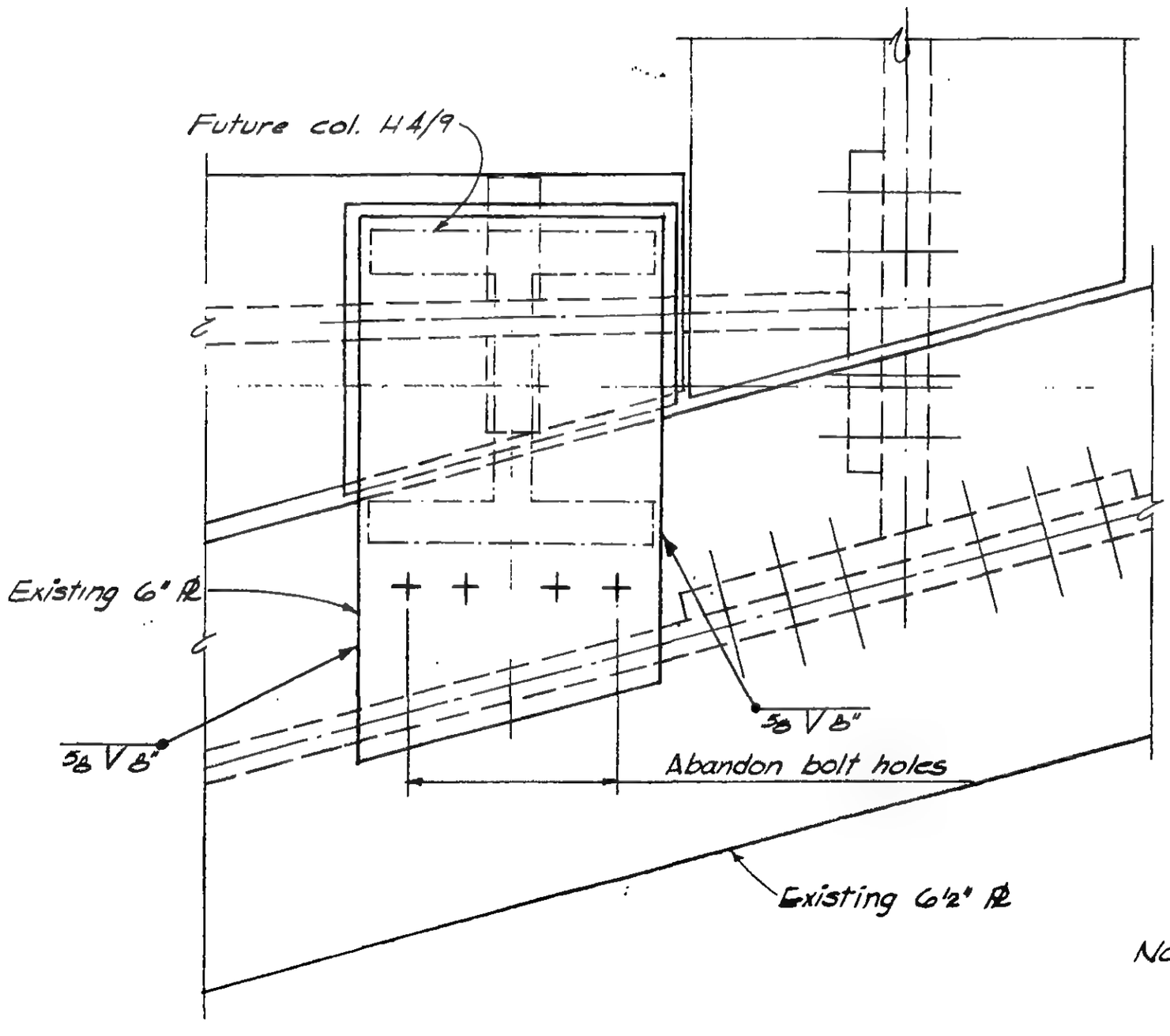

Note: For existing details not shown see Dwg. 13-K3.4-8a

LICENSED PROFESSIONAL ENGINEER
LESLIE E. ROBERTSON
No. 34360
UNIVERSITY OF THE STATE OF NEW YORK

DESIGNED AR

DRAWN DJB

REVIEWED JTM

19-K-1090

SKILLING, HELLE, CHRISTIANSEN, ROBERTSON — Structural & Civil Engineers

PROJECT THE WORLD TRADE CENTER

TITLE ZONE K-3 EL 332 REPAIR DET. AT TOP FLANGE CONN. ℄ BETWEEN 65×24 GIRDER AND 65/68×24 GIRDER AT COLUMN H5-9

DATE 2-28-74

REVISIONS

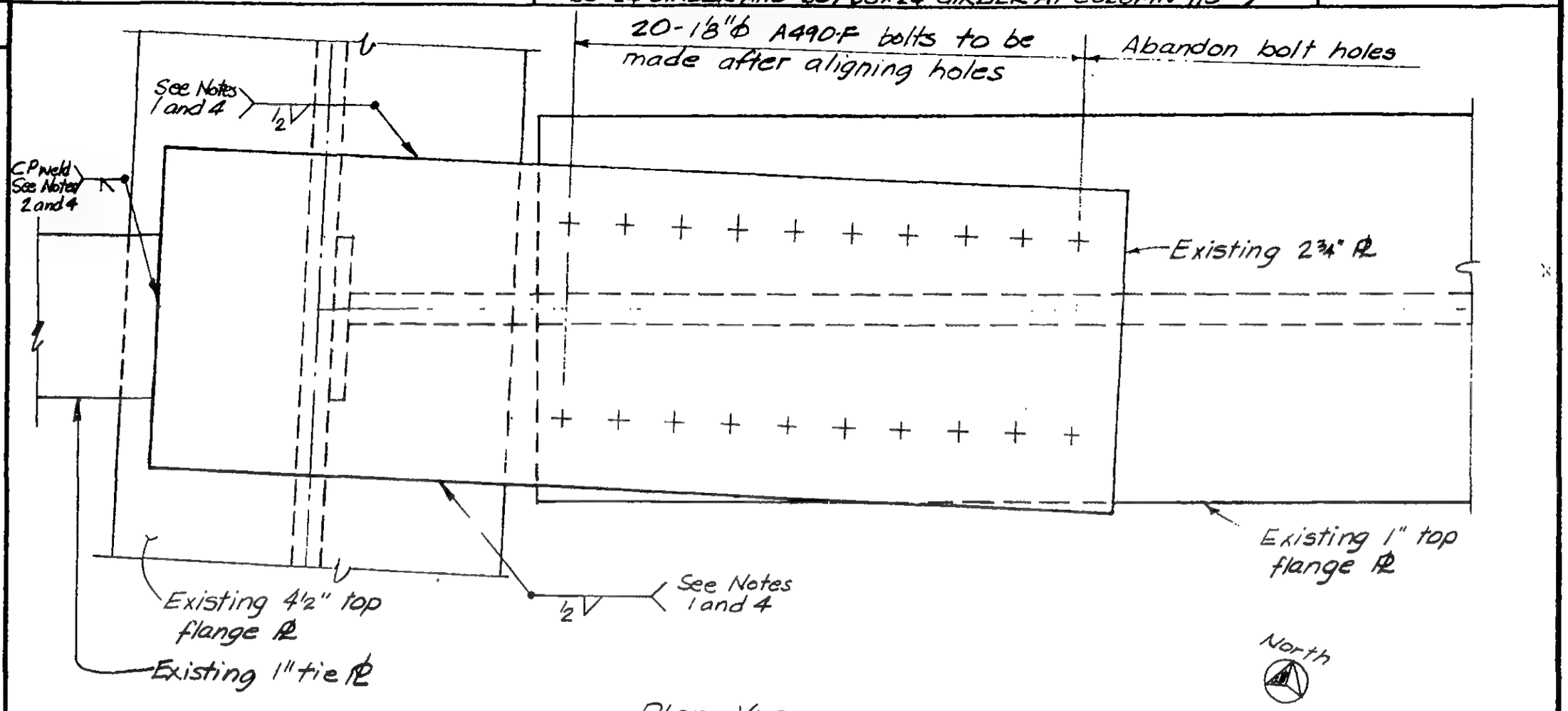

Plan View

NOTES:

1. Remove ½" fillet weld on each side of 2¾" ℄.
2. Remove CP weld connecting 2¾" ℄ to 1" ℄.
3. Position 2¾" ℄ to make all 20-1⅛" ϕ bolts. Do not remove the four 1⅛" ϕ bolts made through 7" ℄.

   IMPORTANT: After repositioning 2¾" ℄, be sure that it seats against the finished portion of Girder G561 since a future column will be placed on it. After repositioning of 2¾" ℄, if complete seating (contact) is not obtained, notify ENGINEER

4. Replace the ½" fillet welds on both sides of 2¾" ℄ and the CP weld connecting 2¾" ℄ to 1" ℄.

LICENSED PROFESSIONAL ENGINEER — LESLIE E. ROBERTSON — No. 34360 — UNIVERSITY OF THE STATE OF NEW YORK

DESIGNED AR

DRAWN DJB

REVIEWED JTM

19-K-1091

SKILLING, HELLE, CHRISTIANSEN, ROBERTSON — Structural & Civil Engineers

PROJECT THE WORLD TRADE CENTER | TITLE REPAIR DETAIL INTERMEDIATE LEVEL EL 332 ZONE K-3 Col. K-49/55 | DATE 3-11-74

REVISIONS

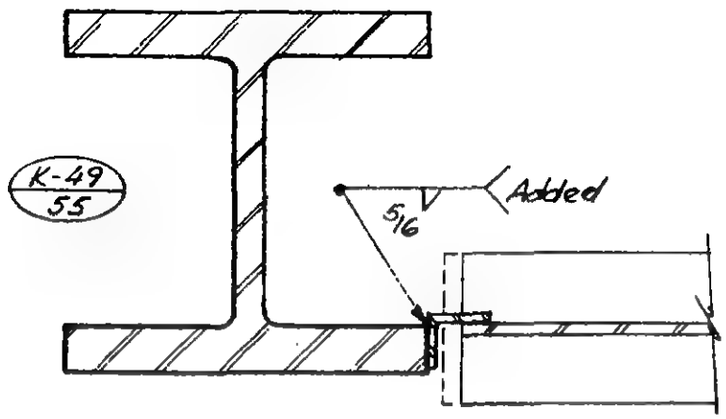

a

Reference: See Dwg. SK-106 framing plan at Intermediate level. Top of steel El. 320.0.

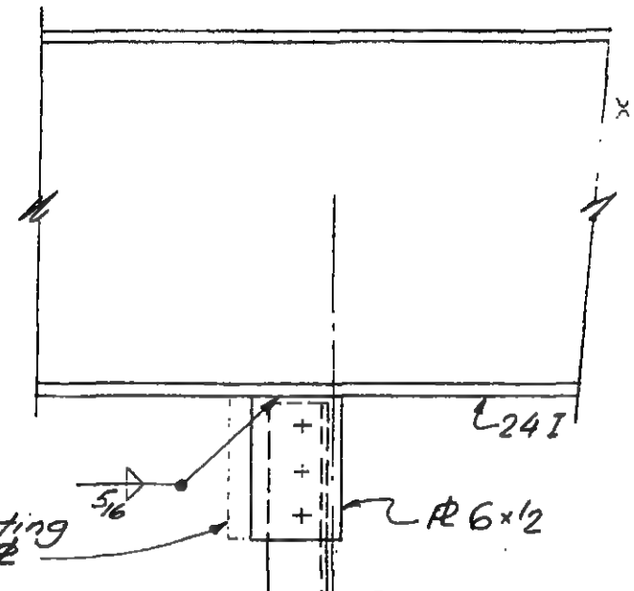

Note 2.
Shore beam, arc air existing double fillet weld of 6"×L" PL

Note 3
After beam 6309 in in proper position, re-weld 6"×L" PL

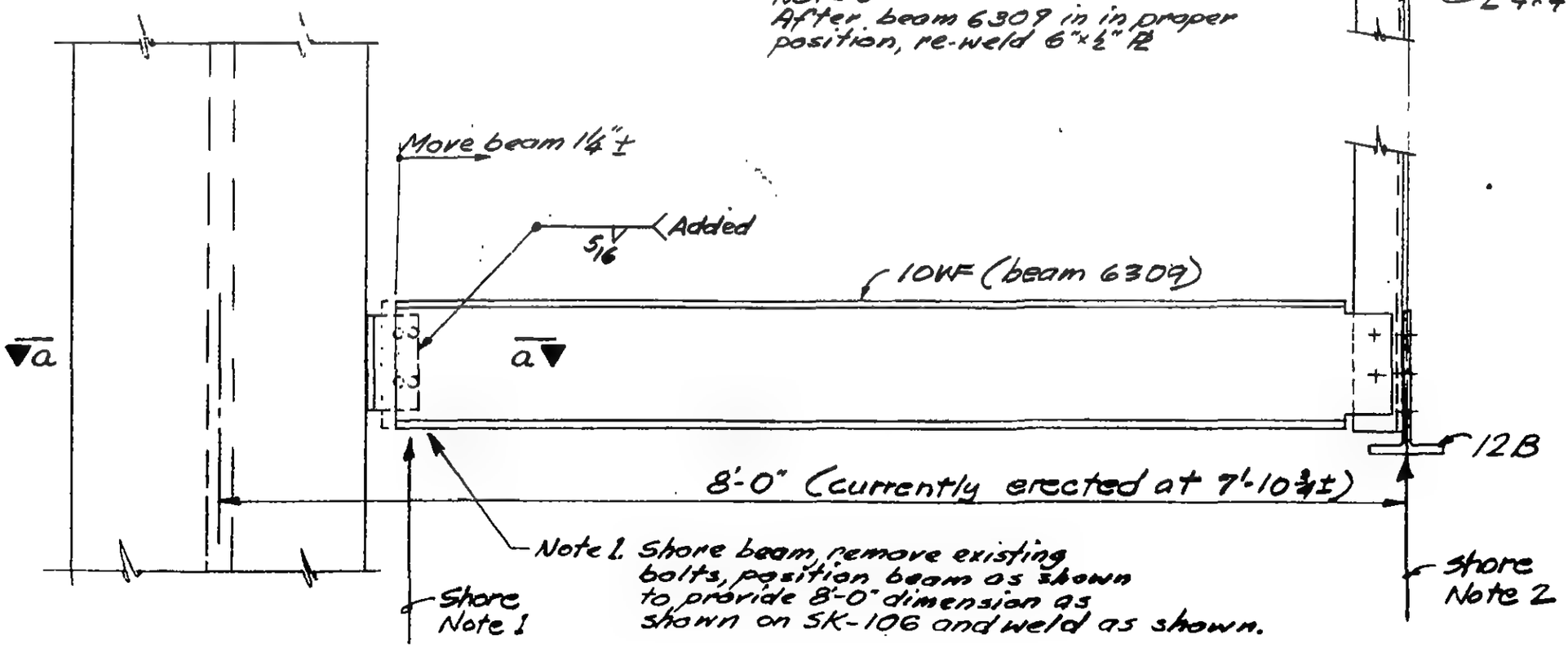

Note 1. Shore beam, remove existing bolts, position beam as shown to provide 8'-0" dimension as shown on SK-106 and weld as shown.

LICENSED PROFESSIONAL ENGINEER — LESLIE E. ROBERTSON — No. 34360 — UNIVERSITY OF THE STATE OF NEW YORK

DESIGNED AR

DRAWN J. Gricius

REVIEWED WAB

19-K-1092

SKILLING, HELLE, CHRISTIANSEN, ROBERTSON — Structural & Civil Engineers

PROJECT: THE WORLD TRADE CENTER | TITLE: A.B. FOR LIGHT POSTS - STREET - ZONE KG | DATE: 4-8-74

REVISIONS

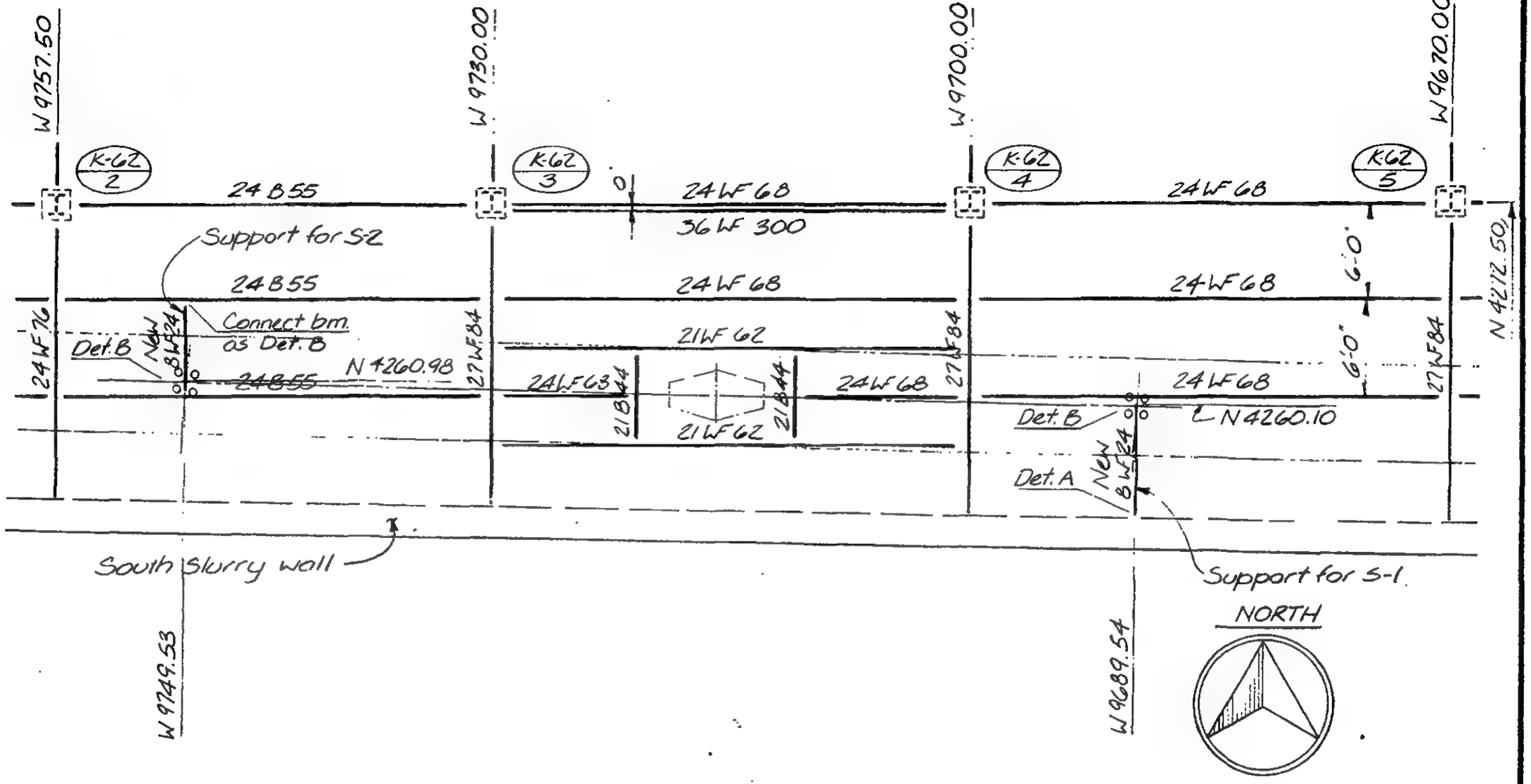

LICENSED PROFESSIONAL ENGINEER — LESLIE E. ROBERTSON — No. 34360 — UNIVERSITY OF THE STATE OF NEW YORK

DESIGNED: A.R., W.A.B.

DRAWN: J.B.

REVIEWED: J.T.M.

19-K-1093.1

SKILLING, HELLE, CHRISTIANSEN, ROBERTSON — Structural & Civil Engineers

PROJECT THE WORLD TRADE CENTER | TITLE A.B. FOR LIGHT POSTS - STREET - ZONE K6 | DATE 4-8-74

REVISIONS

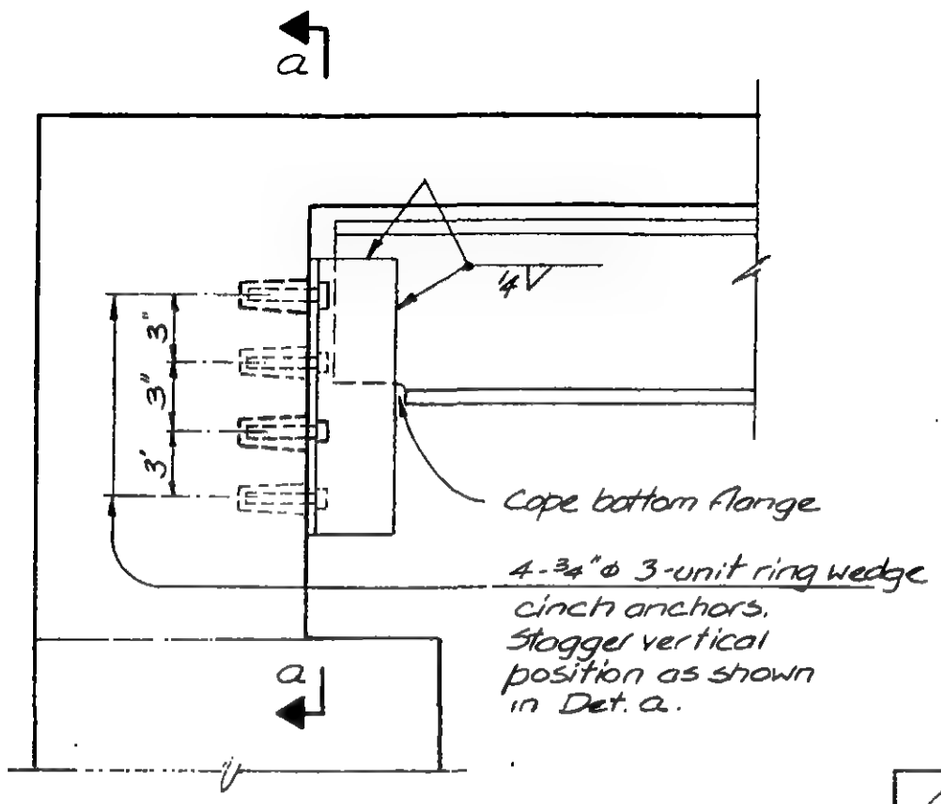

A

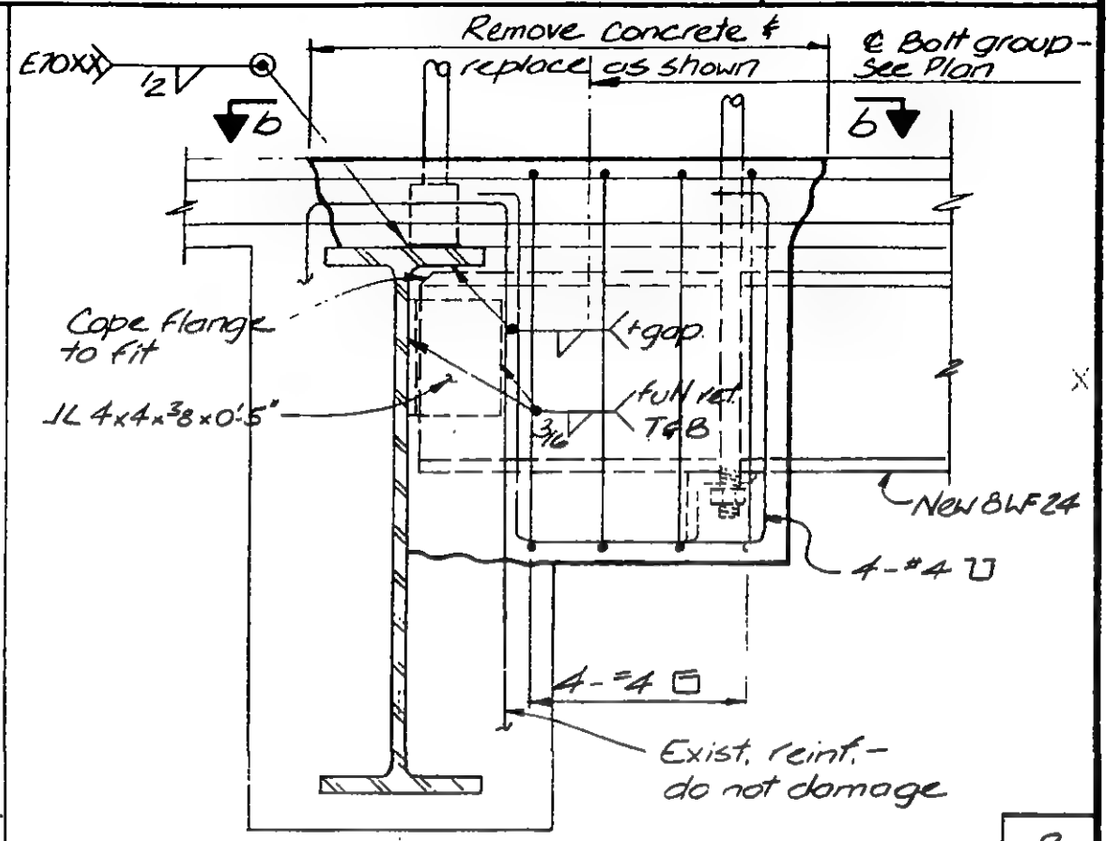

B

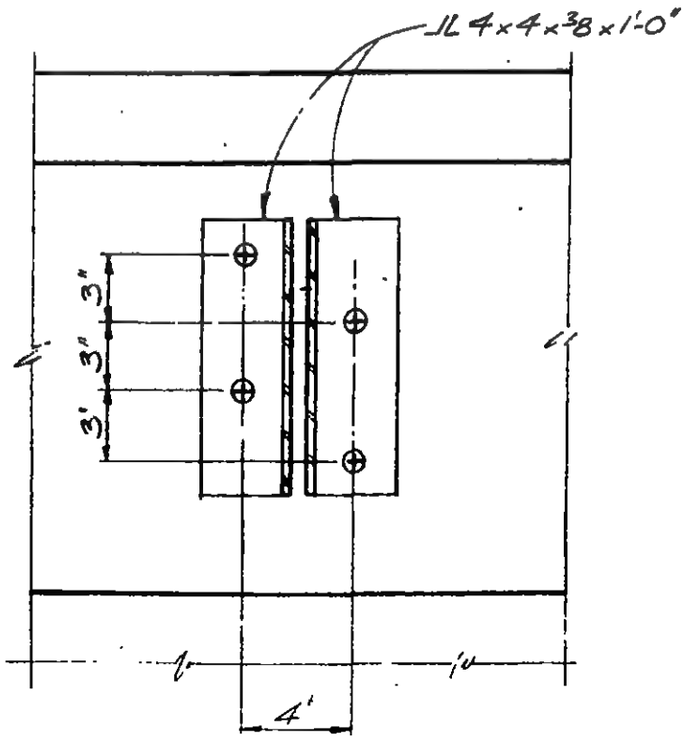

a

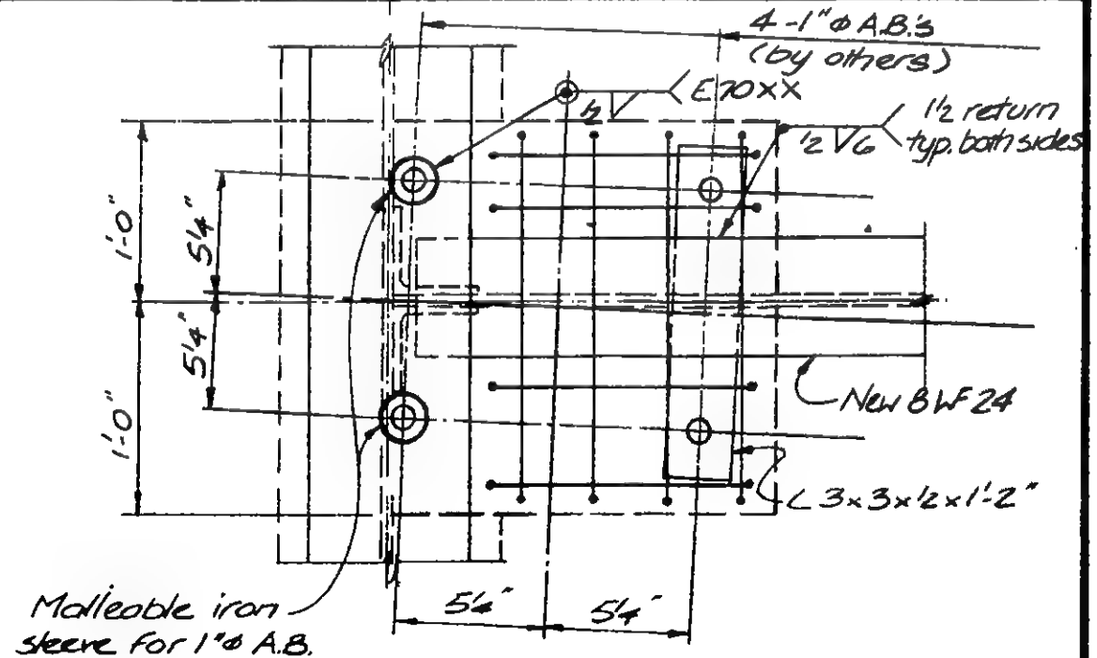

This detail typ. at: 1. North end of support for S-1
2. South end of support for S-2

6

LICENSED PROFESSIONAL ENGINEER — LESLIE E. ROBERTSON — No. 34980 — UNIVERSITY OF THE STATE OF NEW YORK

DESIGNED A.R., W.A.B.
DRAWN J.B.
REVIEWED J.T.M.

19-K-1093.2

SKILLING, HELLE, CHRISTIANSEN, ROBERTSON — Structural & Civil Engineers

PROJECT: THE WORLD TRADE CENTER | TITLE: GRATING & SUPPORTS AT F.A.I OPENINGS - EL 332 | DATE: 4-17-74

REVISIONS

4-24-74
10-21-74

NORTH

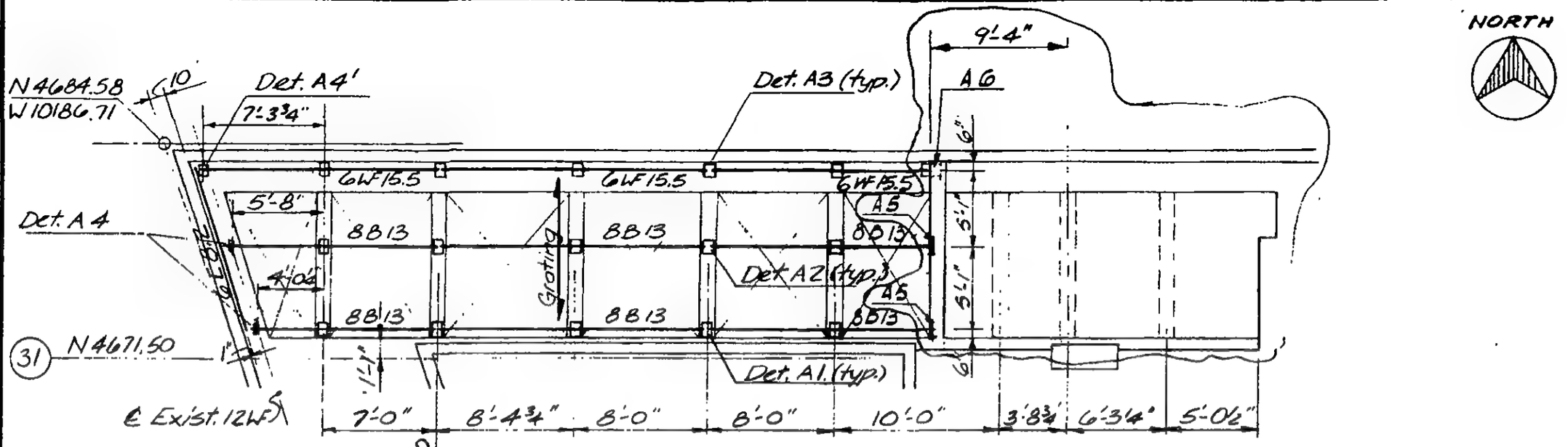

Plan A

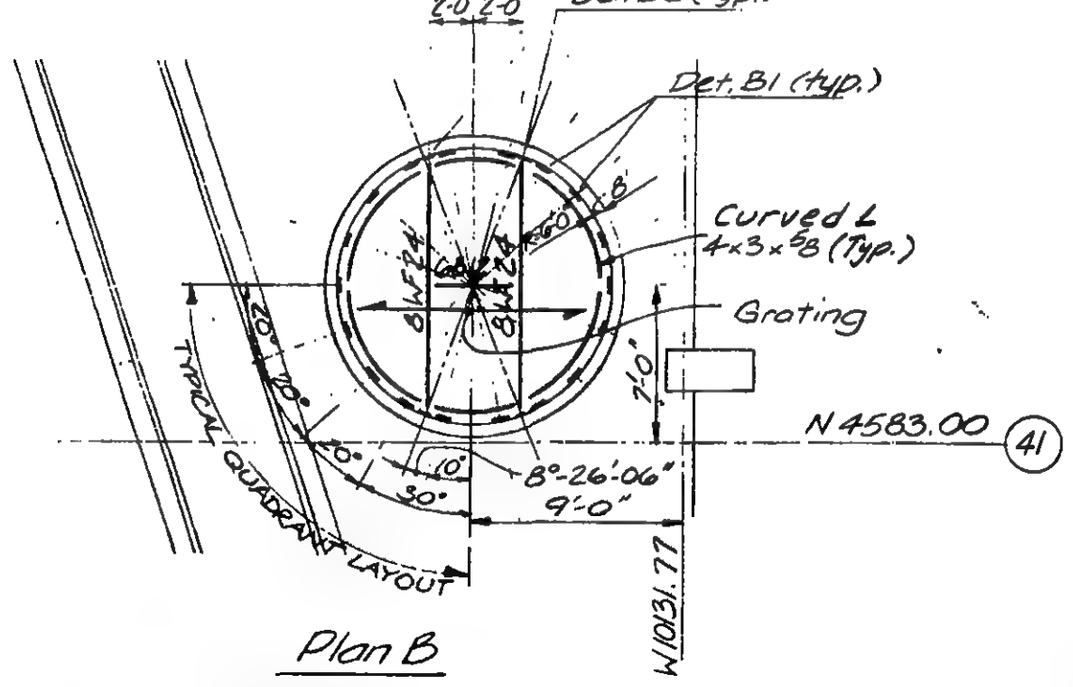

Plan B

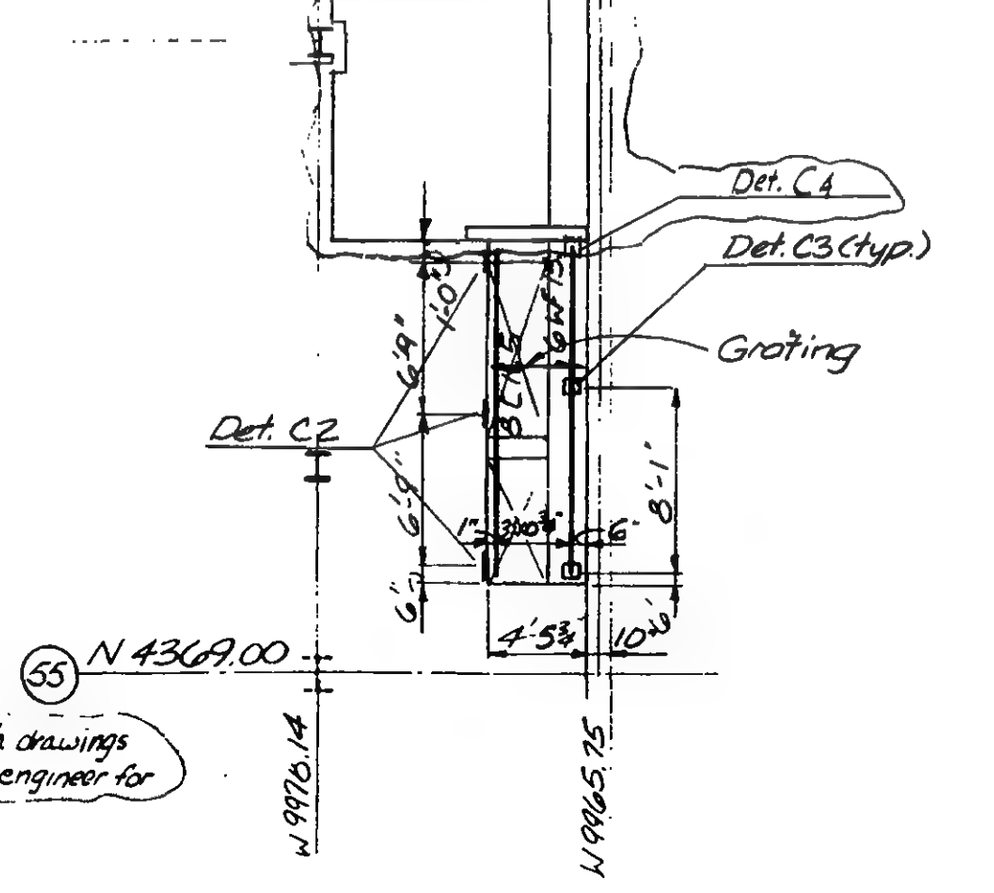

Plan C

Notes:
1. Provide grating at Plans A,B&C, spaning in the direction shown. See Arch. drawings for grating. Details of grating shall be submitted to Architect and engineer for approval.
2. All supporting steel shall be A36 with one shop coat of red primer.

LICENSED PROFESSIONAL ENGINEER — LESLIE E. ROBERTSON — No. 34360 — UNIVERSITY OF THE STATE OF NEW YORK

DESIGNED J.W.
DRAWN J.B
REVIEWED J.T.M

19-K-1094.1

SKILLING, HELLE, CHRISTIANSEN, ROBERTSON — Structural & Civil Engineers

PROJECT: THE WORLD TRADE CENTER

TITLE: GRATING & SUPPORTS AT F.A.I. OPENINGS - EL. 332

DATE: 4-17-74

REVISIONS

4-24-74

10-21-74

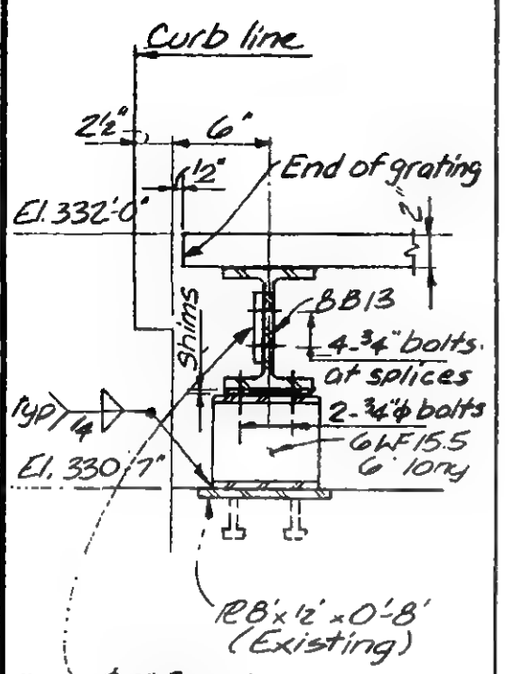

A1

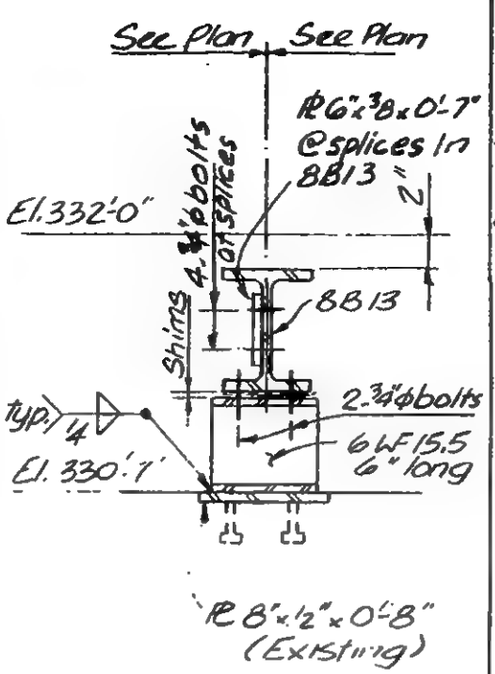

A2

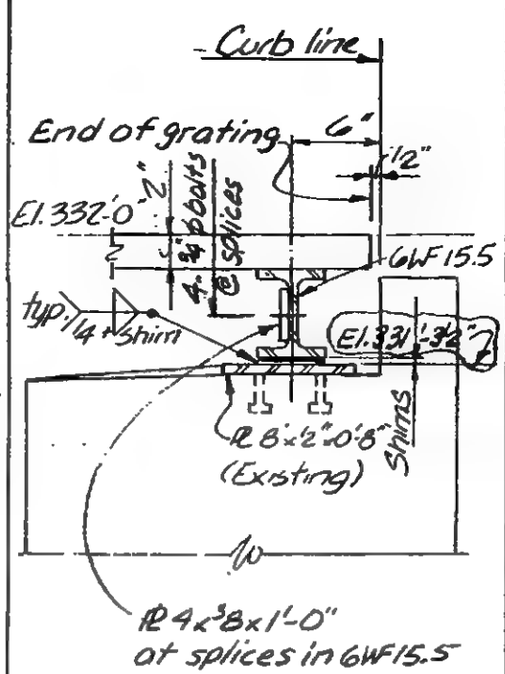

A3

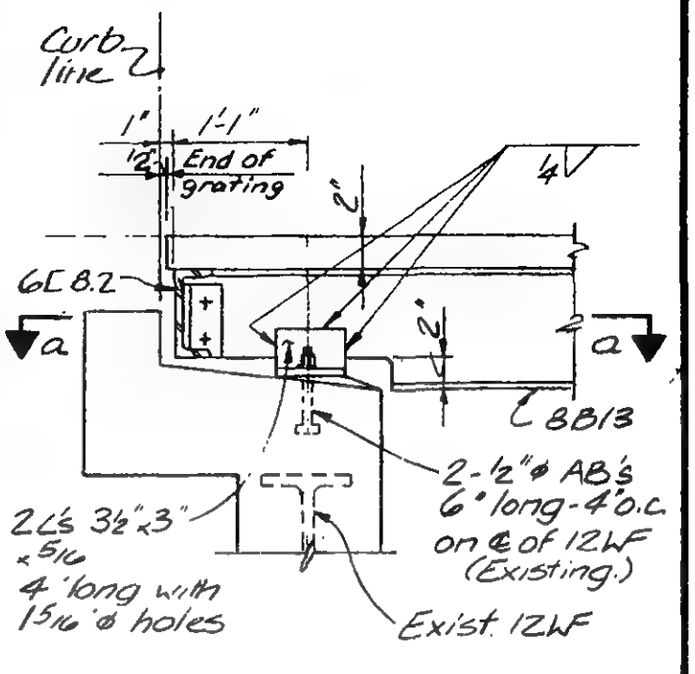

Note: Det A4' sim. to A4 except use existing setting PL in lieu of 2 L's and anchor bolts. Top of setting PL - El. 331'-3½".

A4 | A4'

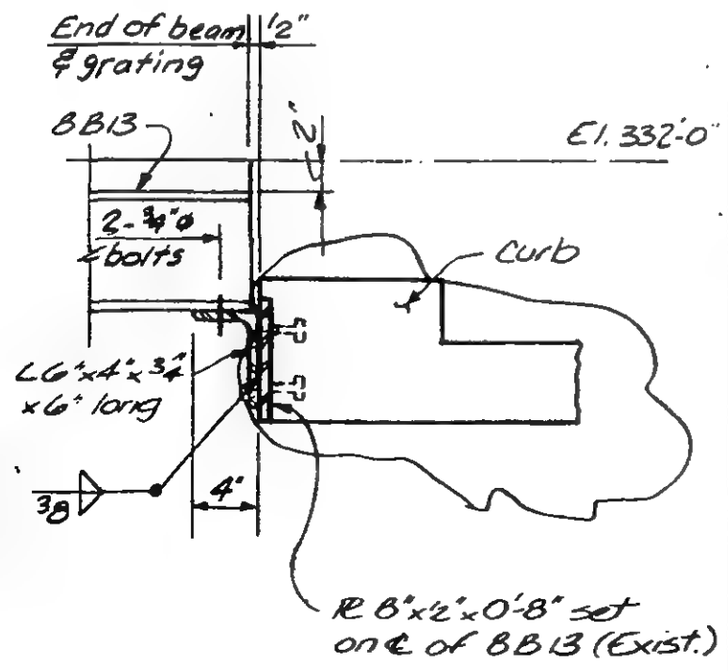

A5

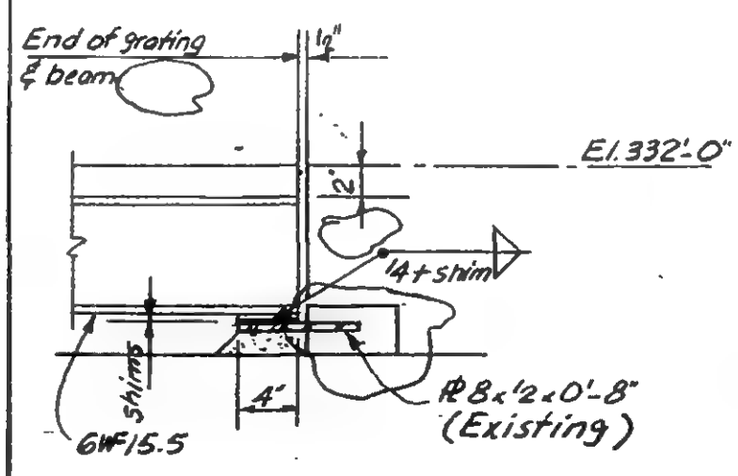

A6

C4

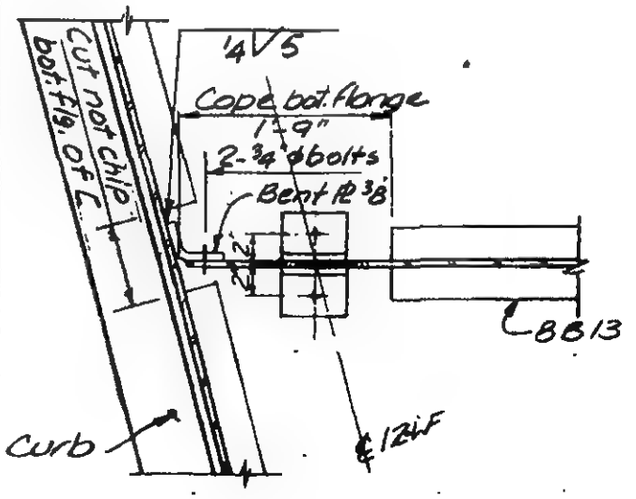

a

19-K-1094.2

LICENSED PROFESSIONAL ENGINEER — LESLIE E. ROBERTSON — No. 34360 — UNIVERSITY OF THE STATE OF NEW YORK

DESIGNED J.W.

DRAWN J.B.

REVIEWED J.T.M.

SKILLING, HELLE, CHRISTIANSEN, ROBERTSON — Structural & Civil Engineers

PROJECT: THE WORLD TRADE CENTER

TITLE: GRATING & SUPPORTS AT F.A.I. OPENINGS - EL. 332

DATE: 4-17-74

REVISIONS

4-24-74
10-21-74

B1

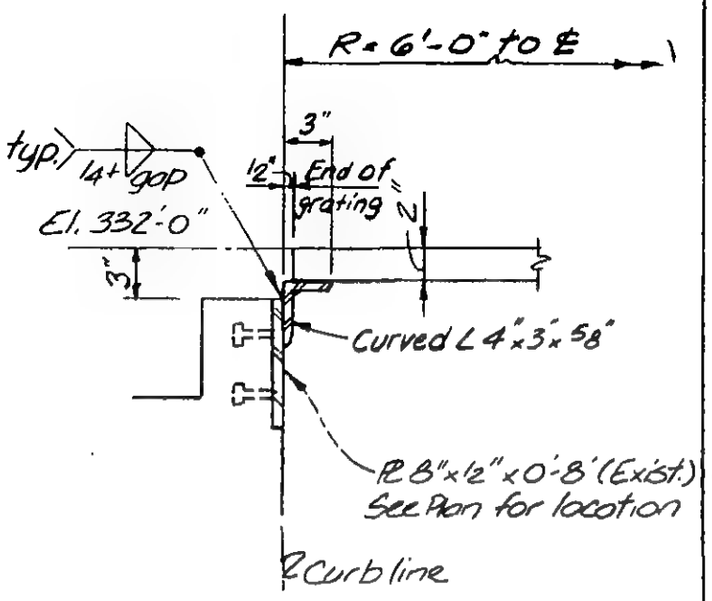

B2

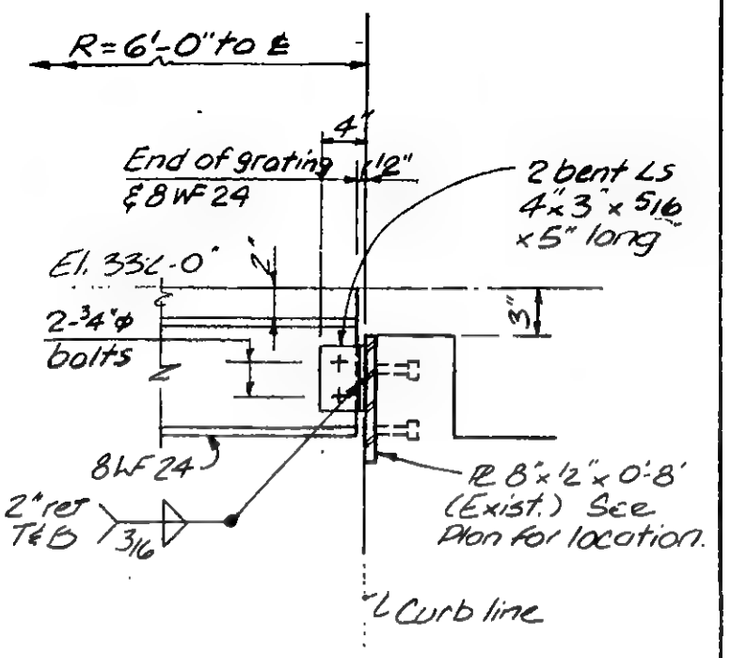

C1

VOID

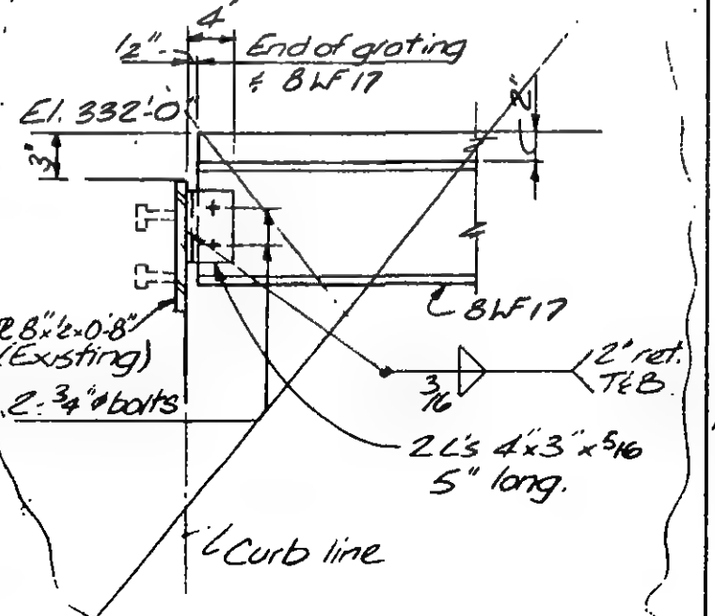

C2

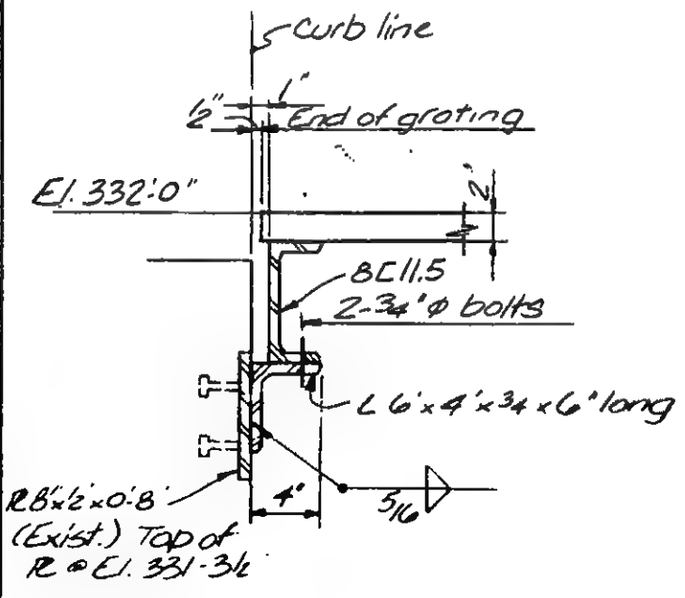

C3

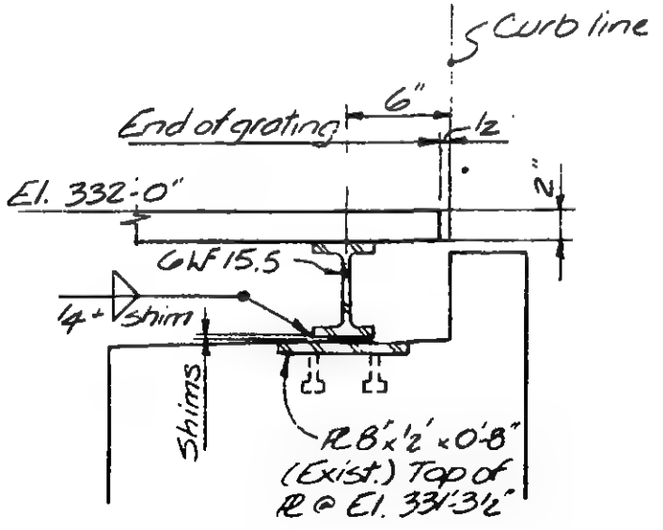

LICENSED PROFESSIONAL ENGINEER
LESLIE E. ROBERTSON
No. 34360
UNIVERSITY OF THE STATE OF NEW YORK

DESIGNED J.W.
DRAWN J.B
REVIEWED J.T.M.

19-K-1094.3

SKILLING, HELLE, CHRISTIANSEN, ROBERTSON — Structural & Civil Engineers

PROJECT THE WORLD TRADE CENTER | TITLE PLAZA - ZONE K-3 - EL 294 - REPAIR | DATE 4-4-75

REVISIONS

4-14-75

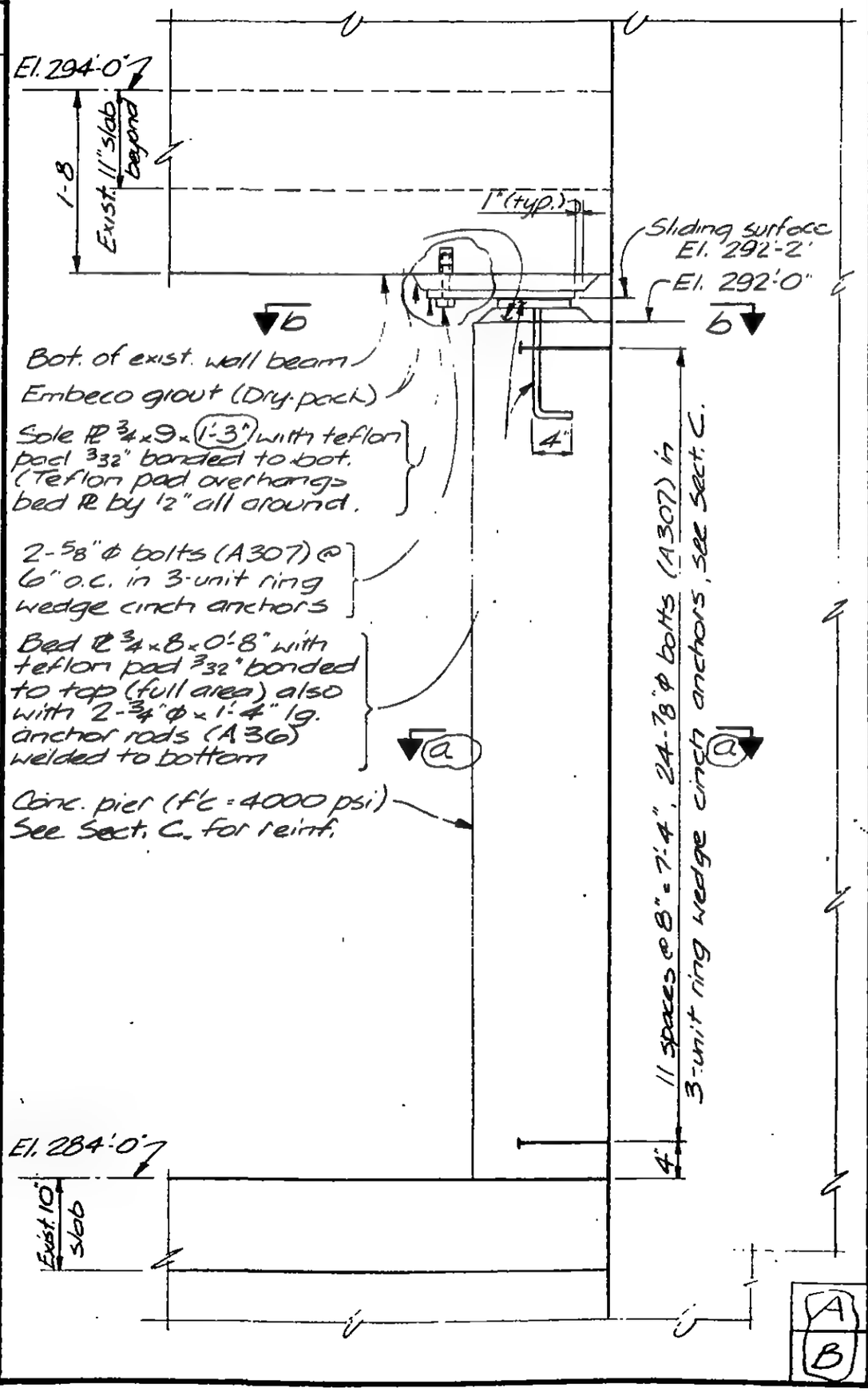

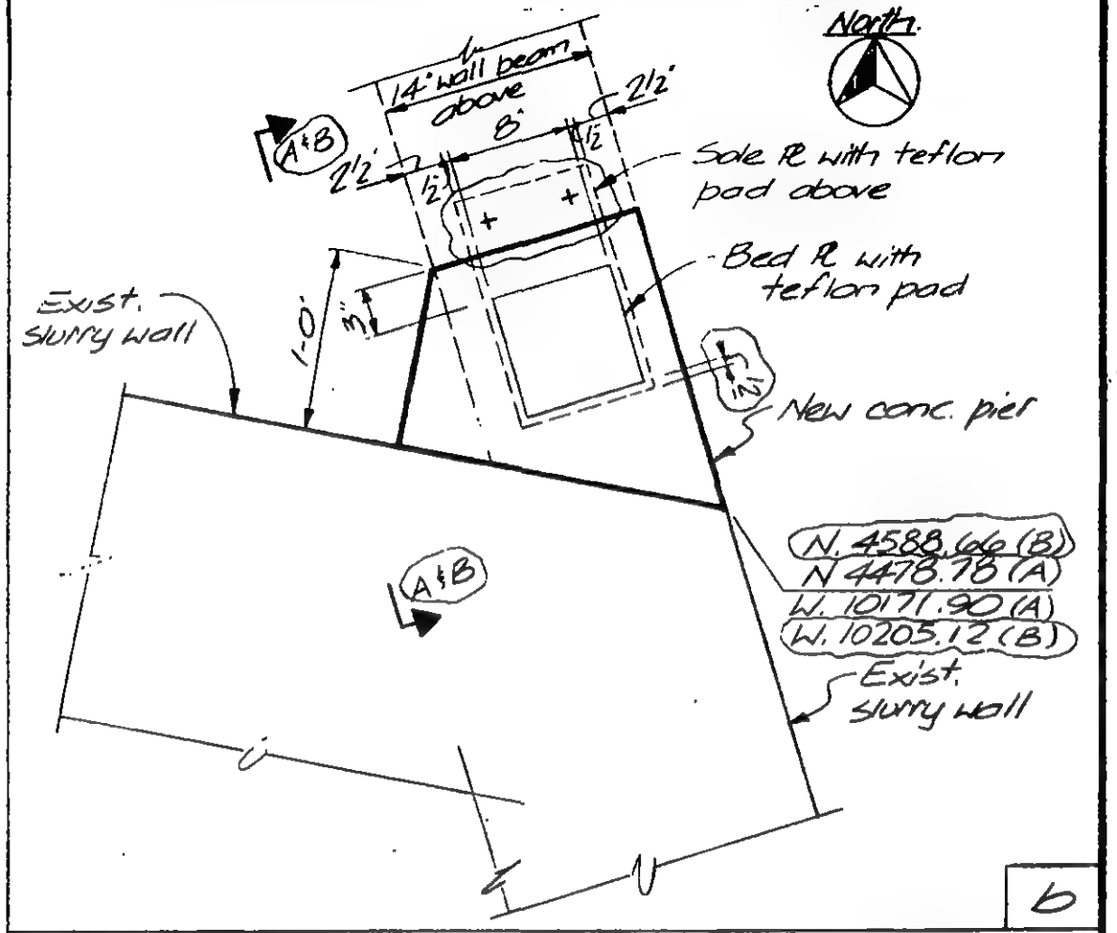

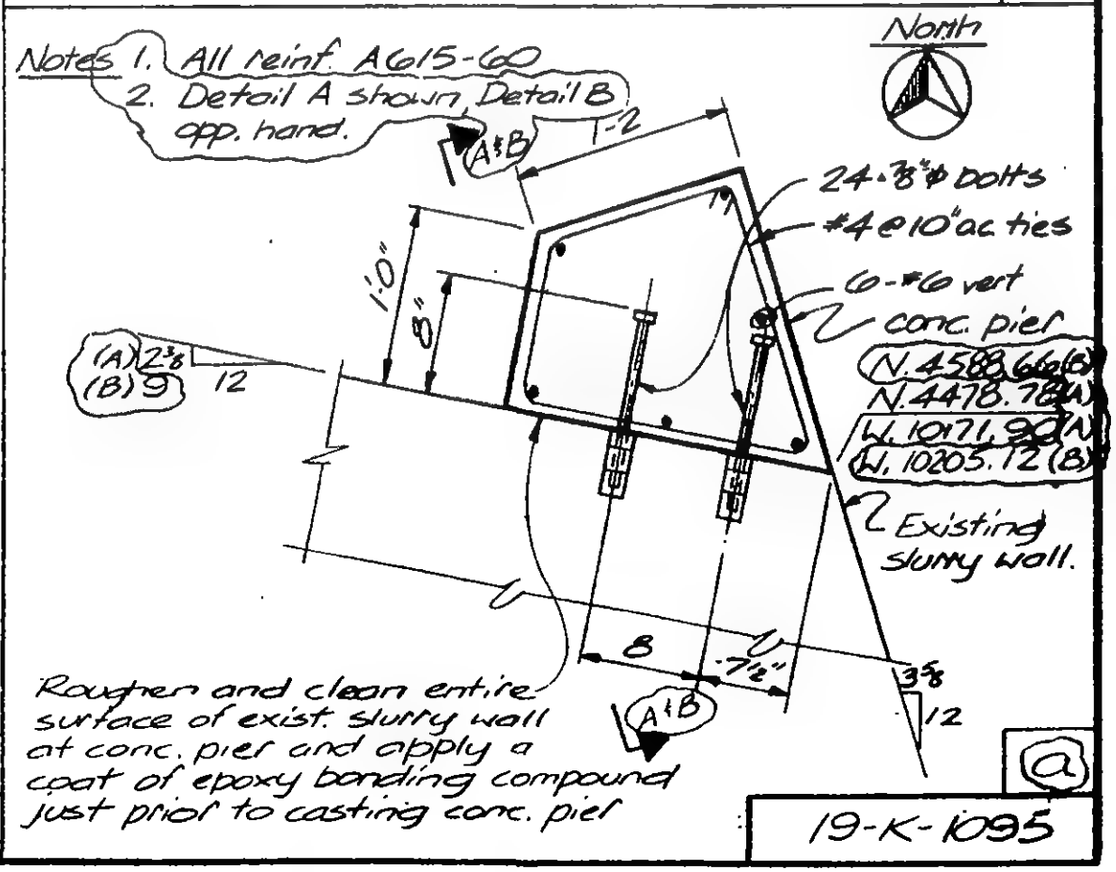

LICENSED PROFESSIONAL ENGINEER — LESLIE E. ROBERTSON — No. 34980 — UNIVERSITY OF THE STATE OF NEW YORK

DESIGNED JTM

DRAWN JB

REVIEWED ETC

19-K-1095

SKILLING, HELLE, CHRISTIANSEN, ROBERTSON — Structural & Civil Engineers

PROJECT THE WORLD TRADE CENTER | TITLE PLAZA - ZONE J-3 - EL. 299 - REPAIR | DATE 4-4-75

REVISIONS
4-14-75

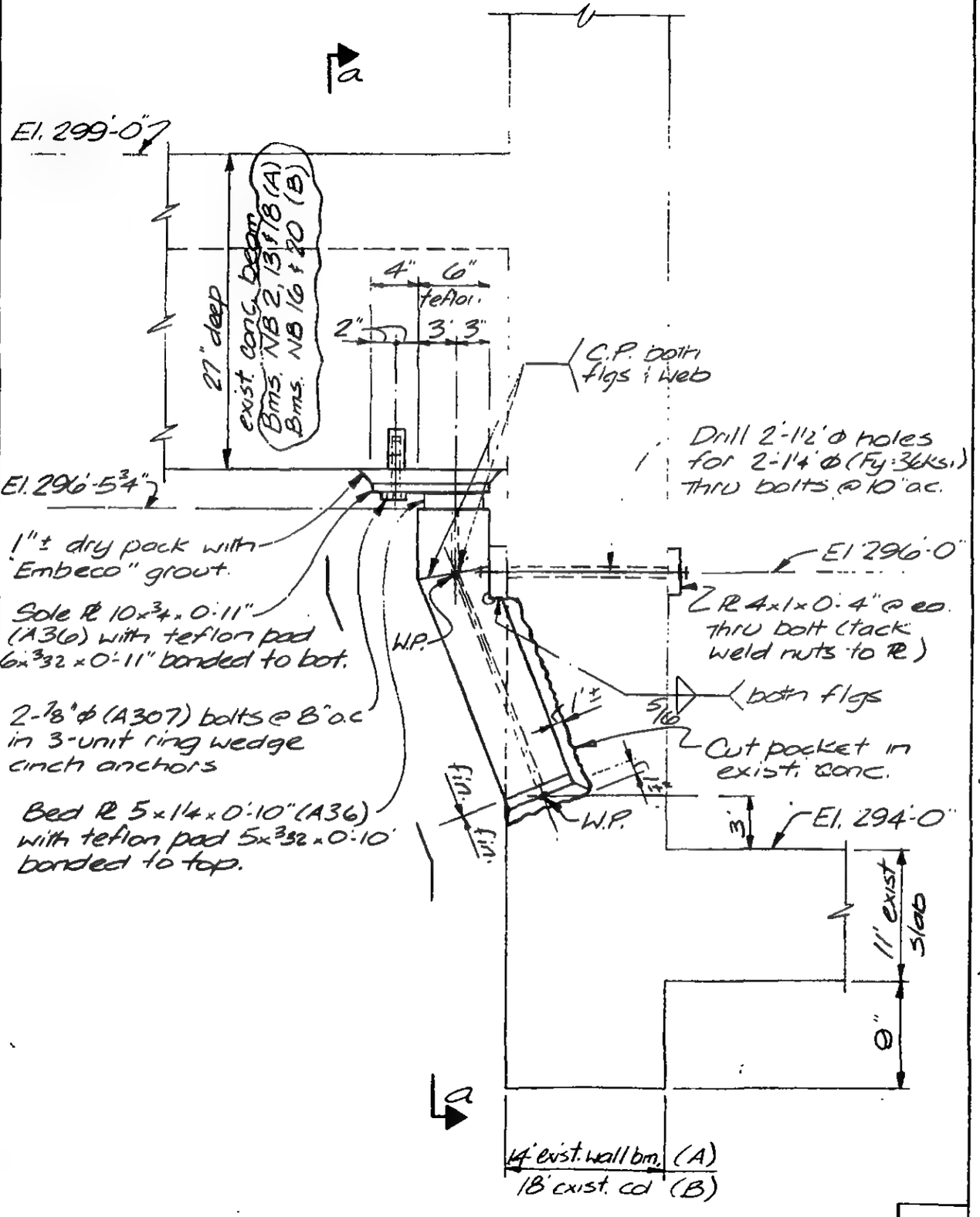

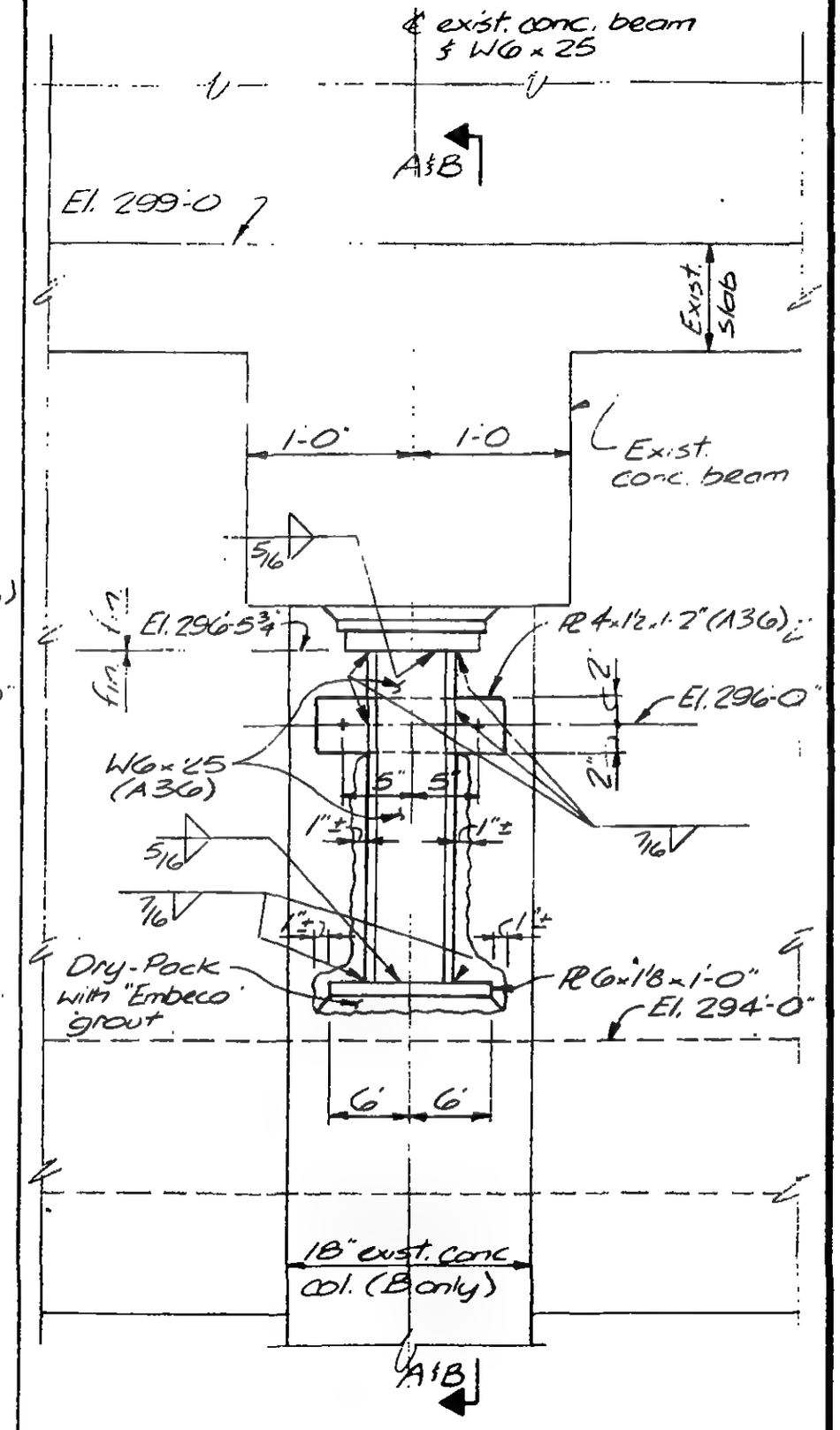

LICENSED PROFESSIONAL ENGINEER
LESLIE E. ROBERTSON
No. 34360
UNIVERSITY OF THE STATE OF NEW YORK

DESIGNED JTM
DRAWN JB
REVIEWED ETL

A
B

a

19-J-1096.1

SKILLING, HELLE, CHRISTIANSEN, ROBERTSON — Structural & Civil Engineers

PROJECT THE WORLD TRADE CENTER | TITLE PLAZA - ZONE J-3 -EL.299 - REPAIR | DATE 4-4-75

REVISIONS

4-14-75

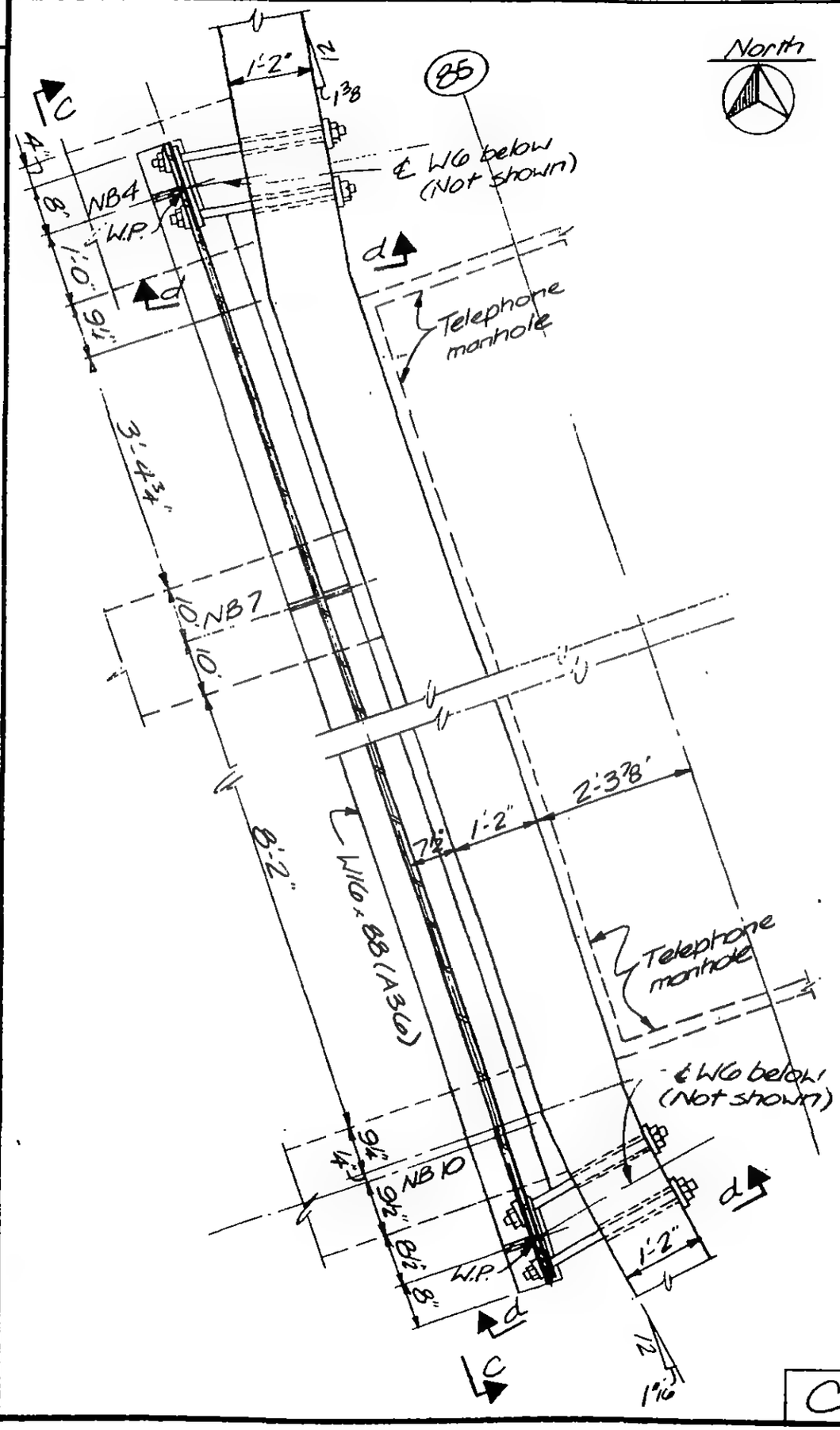

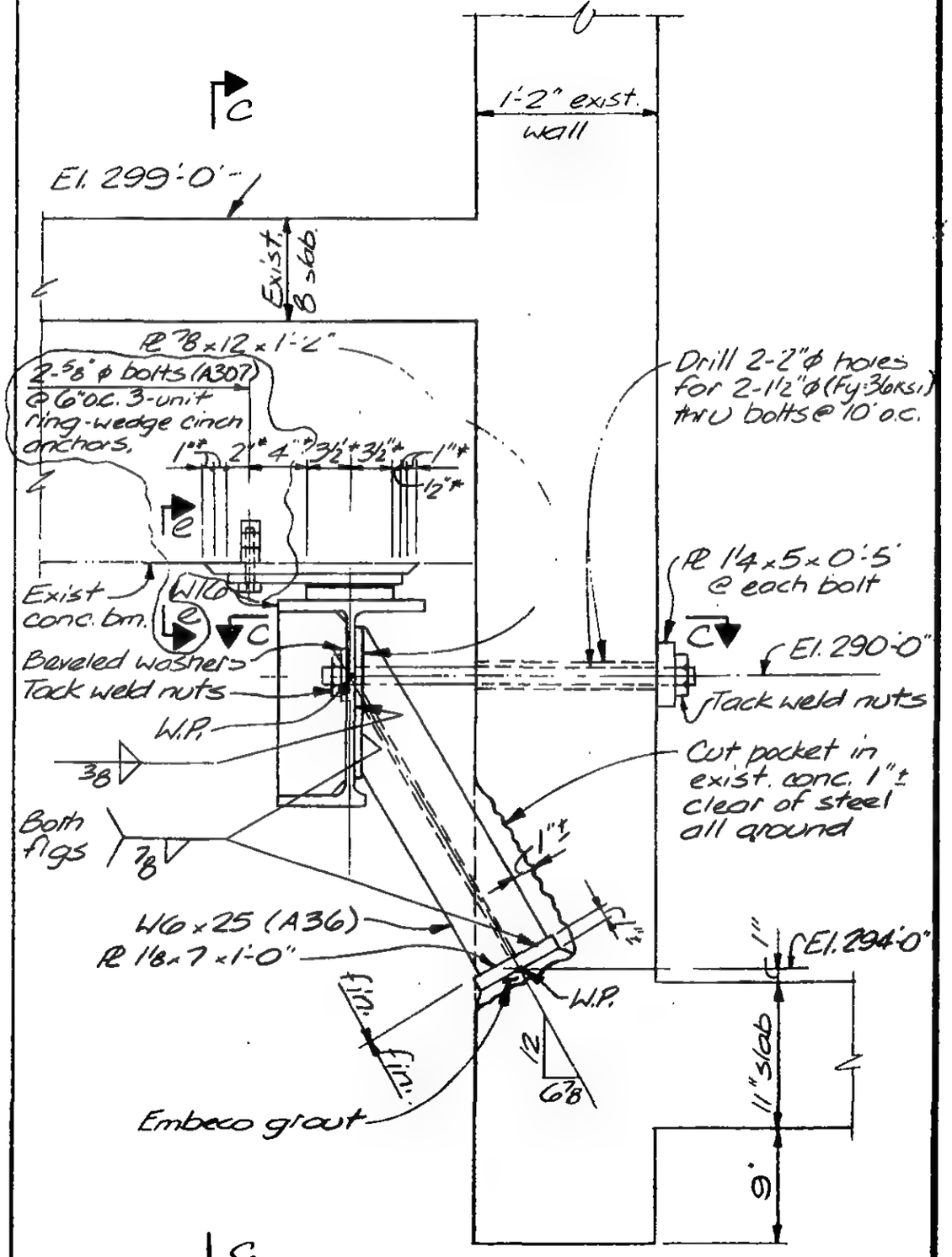

LICENSED PROFESSIONAL ENGINEER — LESLIE E. ROBERTSON — No. 34360 — UNIVERSITY OF THE STATE OF NEW YORK

DESIGNED JTM

DRAWN JB

REVIEWED ETL

C

d

19-J-1096.2

SKILLING, HELLE, CHRISTIANSEN, ROBERTSON — Structural & Civil Engineers

PROJECT THE WORLD TRADE CENTER | TITLE PLAZA - ZONE J-3 - EL. 299 - REPAIR | DATE 4-4-75

REVISIONS

4-14-75

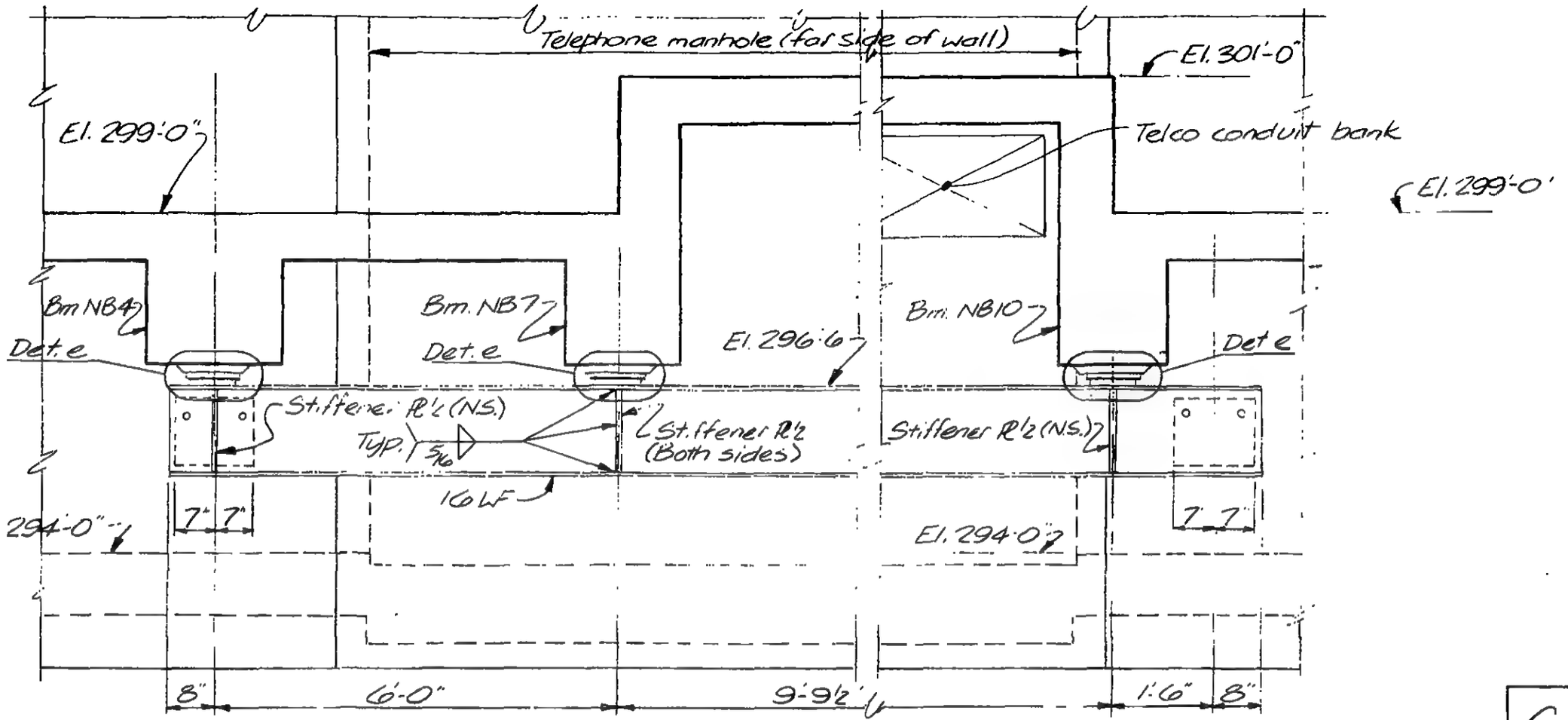

C

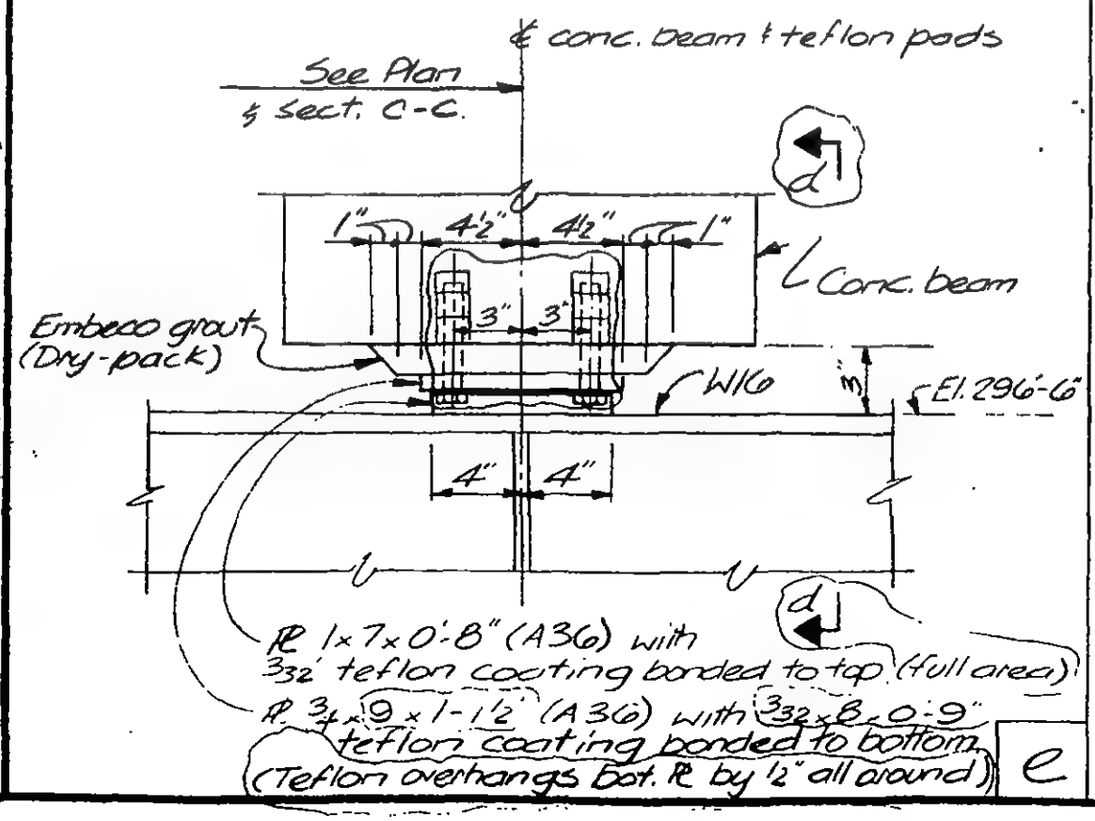

e

LICENSED PROFESSIONAL ENGINEER
LESLIE E. ROBERTSON
No. 34980
UNIVERSITY OF THE STATE OF NEW YORK

DESIGNED JTM

DRAWN JB

REVIEWED ETL

19-J-1096.3

SKILLING, HELLE, CHRISTIANSEN, ROBERTSON — Structural & Civil Engineers

PROJECT: THE WORLD TRADE CENTER | TITLE: 10'x10' OPENING AT ELEVATION 253' | DATE: 9-4-75

REVISIONS
1 9-23-75
2 12-4-75

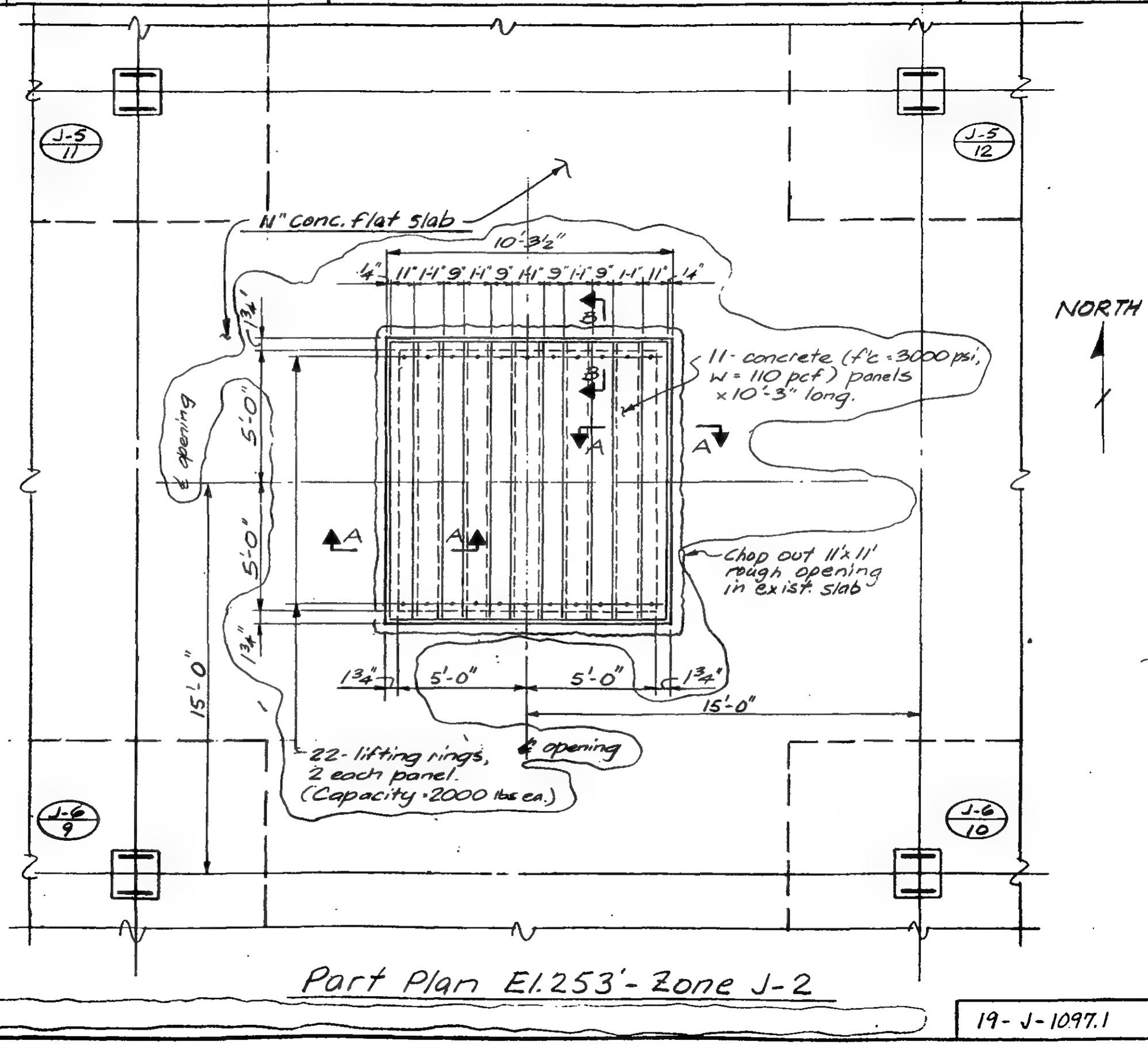

Part Plan El. 253' - Zone J-2

LICENSED PROFESSIONAL ENGINEER — LESLIE E. ROBERTSON — No. 34360 — UNIVERSITY OF THE STATE OF NEW YORK

DESIGNED F. Sayani
DRAWN A.L. Franqui
REVIEWED J.T.M.

19-J-1097.1

SKILLING, HELLE, CHRISTIANSEN, ROBERTSON — Structural & Civil Engineers

PROJECT THE WORLD TRADE CENTER | TITLE 10'x10" OPENING AT ELEVATION 253' | DATE 1-4-75

REVISIONS
⚠ 9-23-75
⚠ 12-4-75

Clean face of exist. conc. and throughly coat entire surface with approved epoxy bonding compound just before casting new "non-shrink" f'c=4000psi concrete.

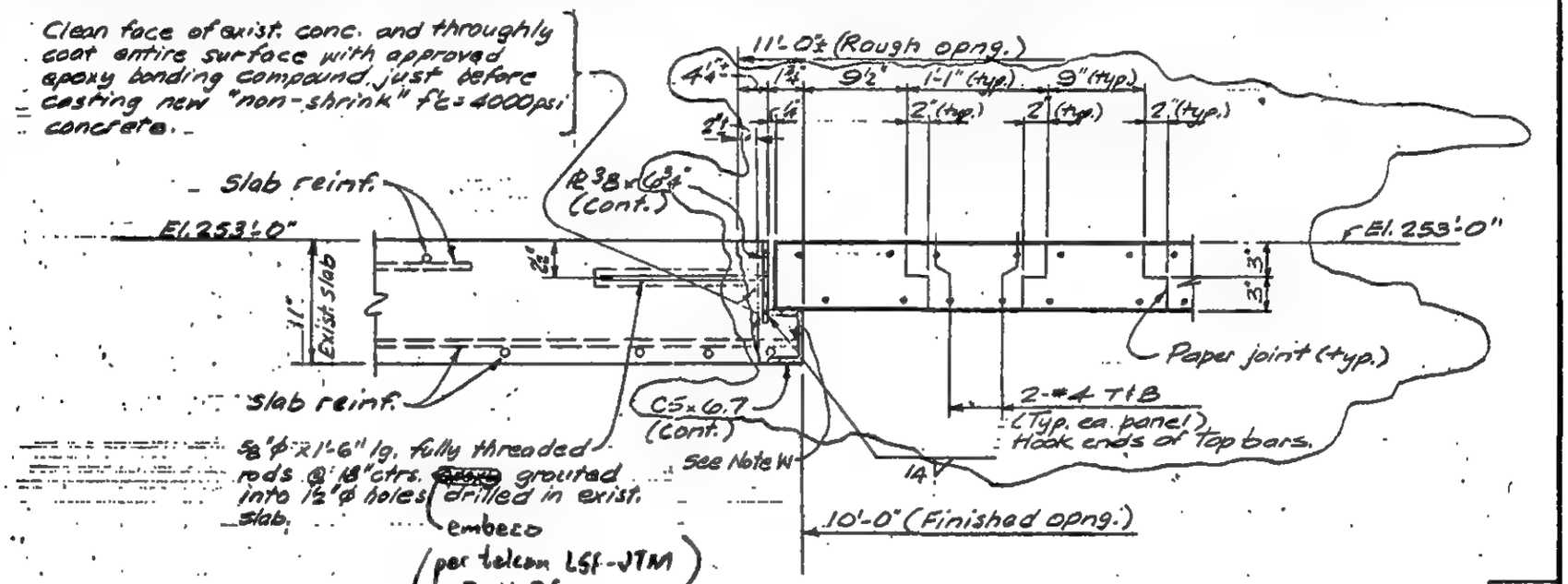

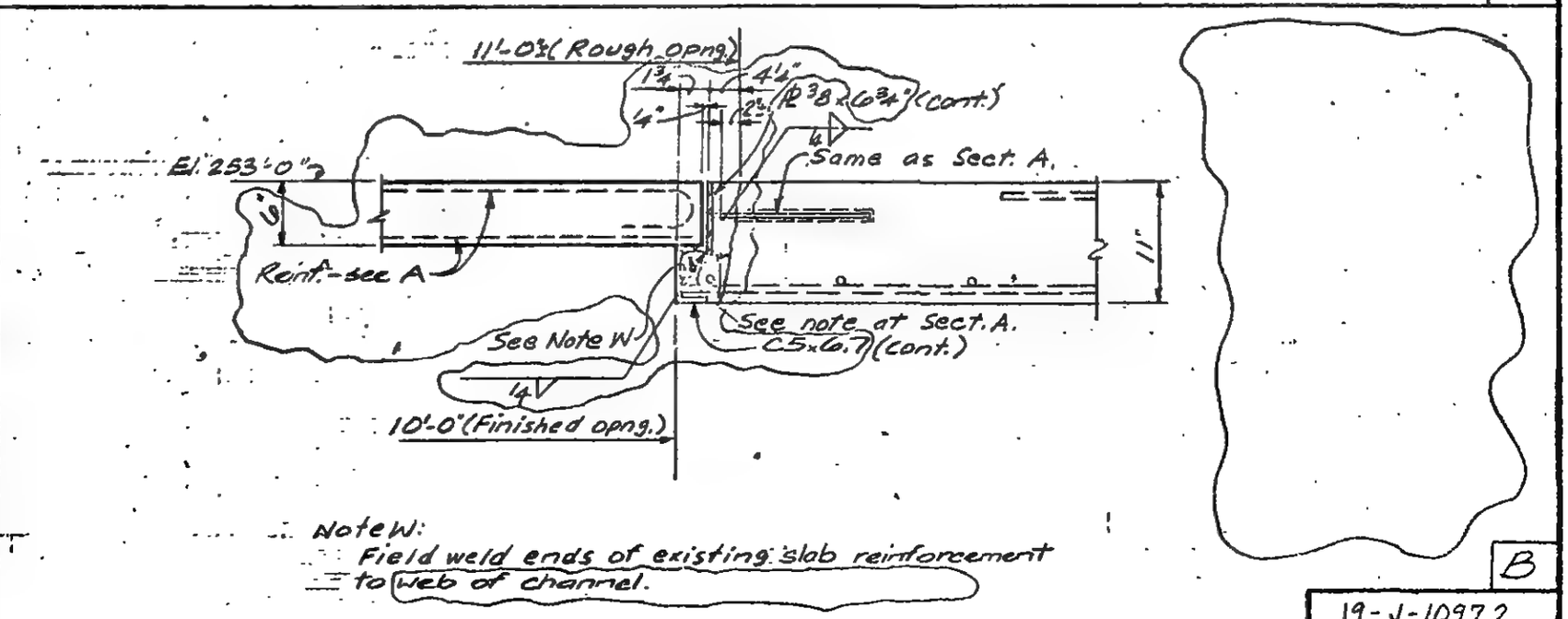

Note W:
Field weld ends of existing slab reinforcement to web of channel.

LICENSED PROFESSIONAL ENGINEER — LESLIE E. ROBERTSON — No. 24380 — UNIVERSITY OF THE STATE OF NEW YORK

DESIGNED F. Salvadori
DRAWN A.L. Franqui
REVIEWED J.T.M.

19-J-10972

SKILLING, HELLE, CHRISTIANSEN, ROBERTSON — Structural & Civil Engineers

PROJECT THE WORLD TRADE CENTER | TITLE 10'x10" OPENING AT ELEVATION 253' | DATE 9-4-75

REVISIONS
1 9-23-75
2 12-4-75

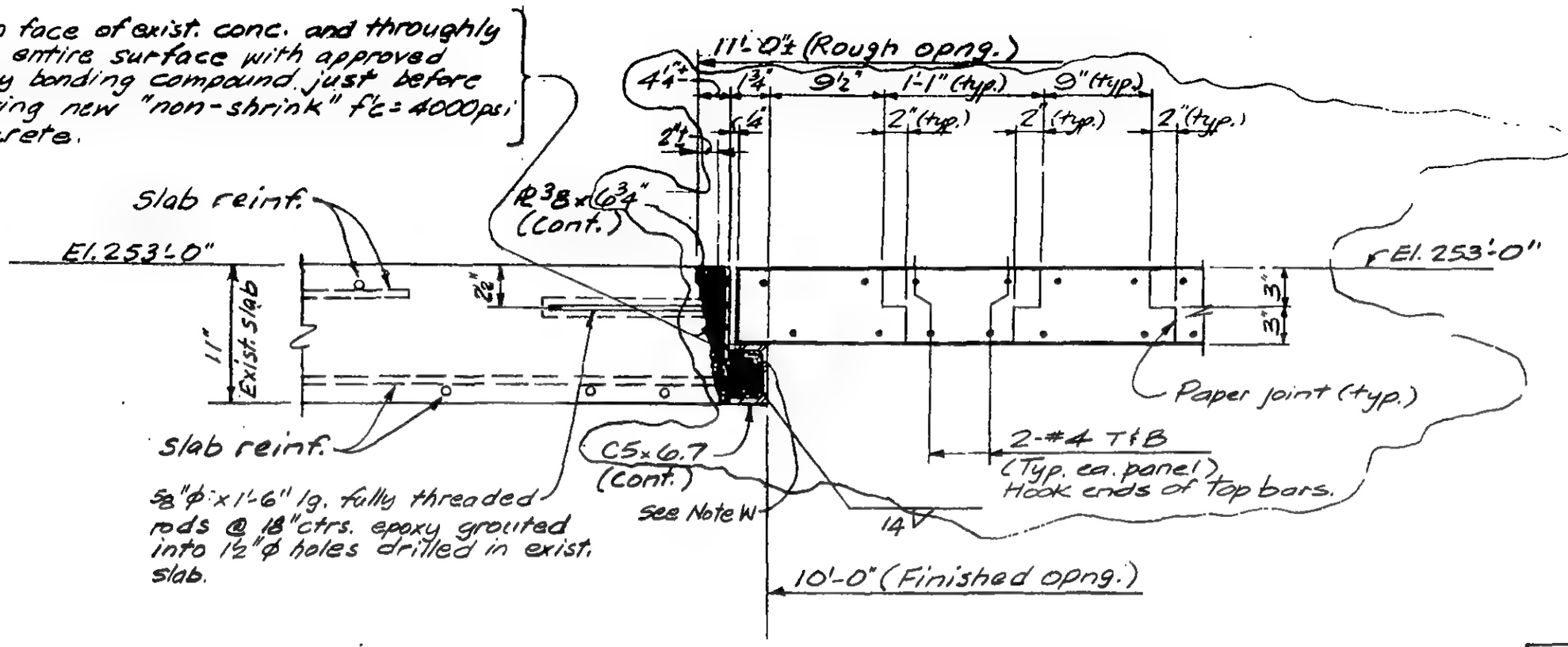

A

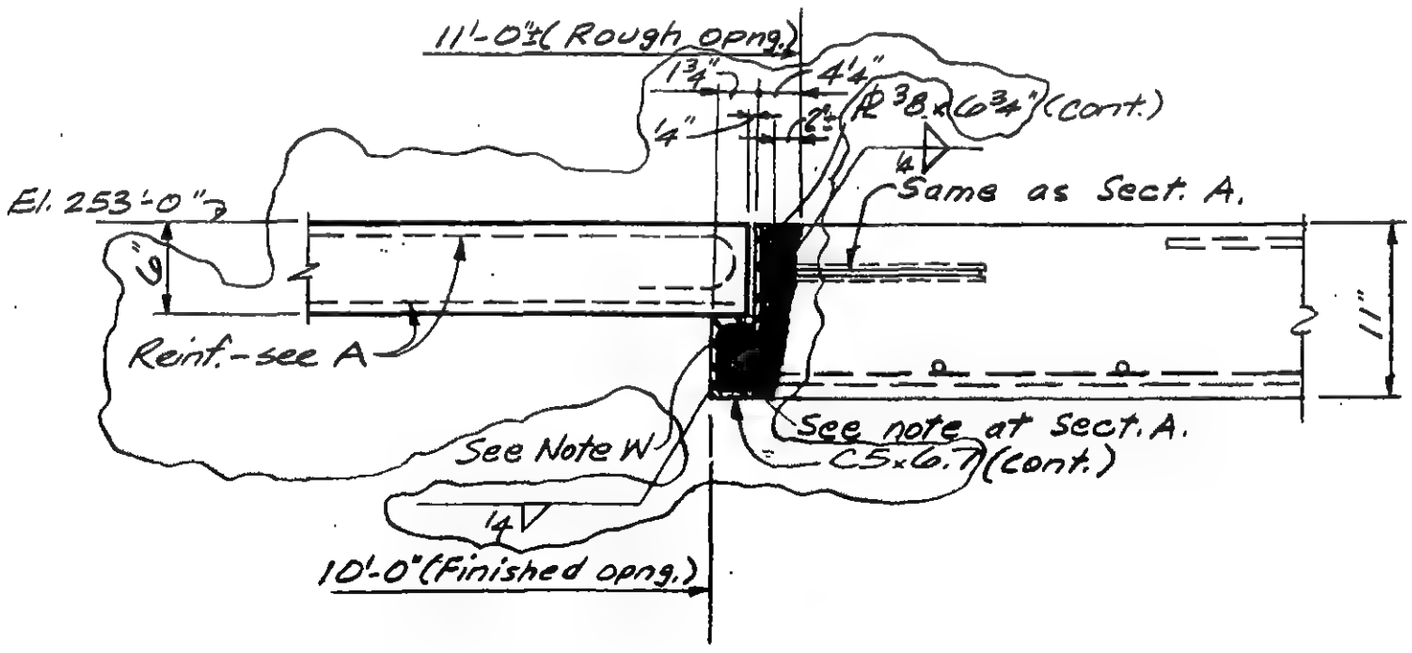

B

Note W:
Field weld ends of existing slab reinforcement to web of channel.

LICENSED PROFESSIONAL ENGINEER — LESLIE E. ROBERTSON — No. 34960 — UNIVERSITY OF THE STATE OF NEW YORK

DESIGNED F. Sayani
DRAWN A.L. Franqui
REVIEWED J.T.M.

19-J-1097.2

SKILLING, HELLE, CHRISTIANSEN, ROBERTSON — Structural & Civil Engineers

PROJECT THE WORLD TRADE CENTER | TITLE LIFTING EYES @ ELEVATION 274 | DATE 9-4-75

REVISIONS

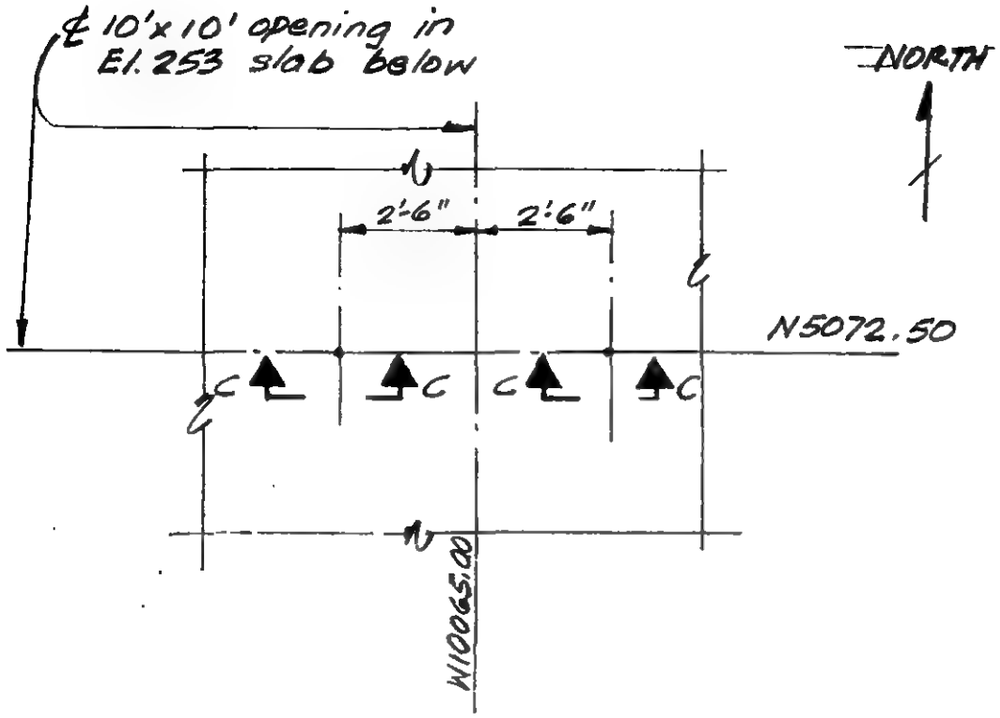

Part Plan - El. 274 - Zone J-2

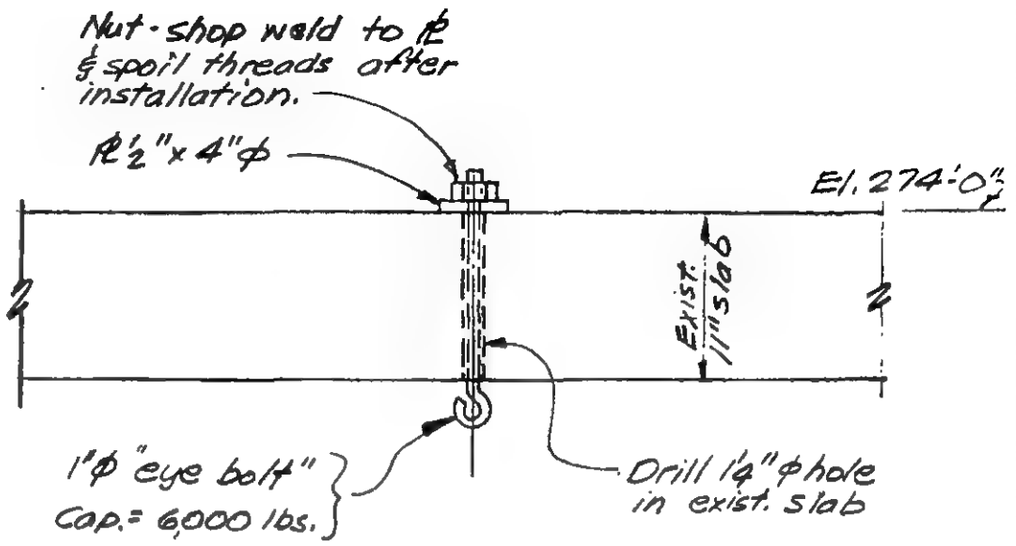

C

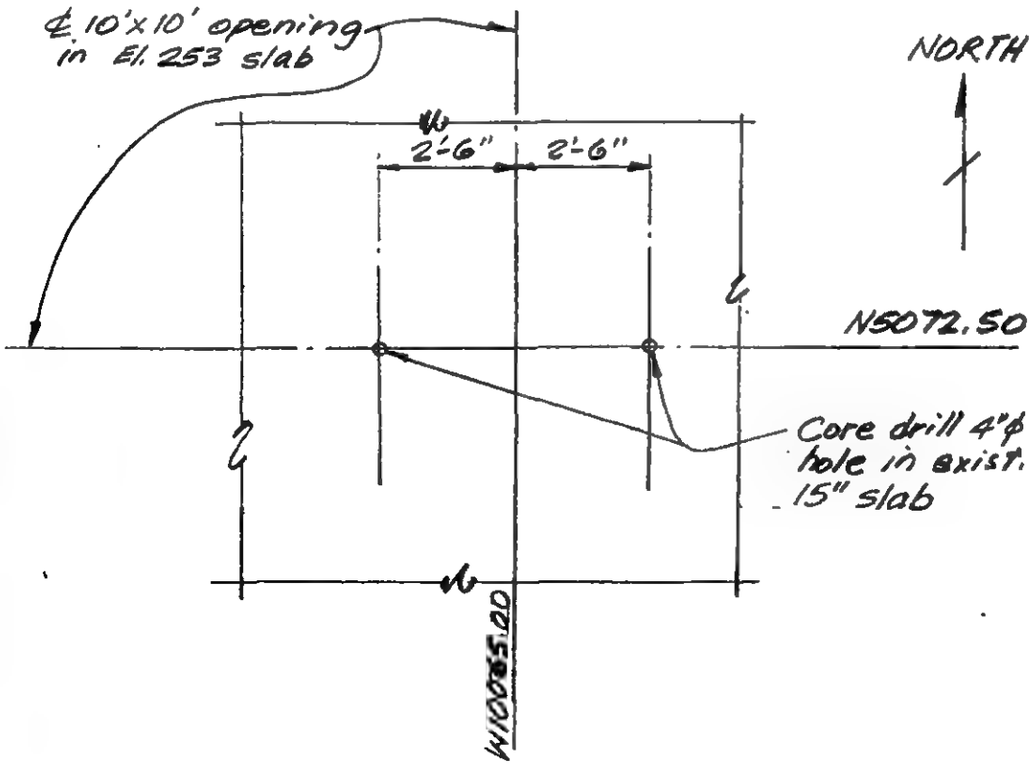

Part Plan - El. 264 - Zone J-2

LICENSED PROFESSIONAL ENGINEER — LESLIE E. ROBERTSON — No. 34980 — STATE OF NEW YORK

SIGNED T. McGuinness

DRAWN

REVIEWED J.T.M.

19-J-1097.3

SKILLING, HELLE, CHRISTIANSEN, ROBERTSON — Structural & Civil Engineers

PROJECT THE WORLD TRADE CENTER | TITLE BEAM HOLES - EL. 332 - ZONE K1, K3 & K5 | DATE 11-4-75

REVISIONS

11-20-75

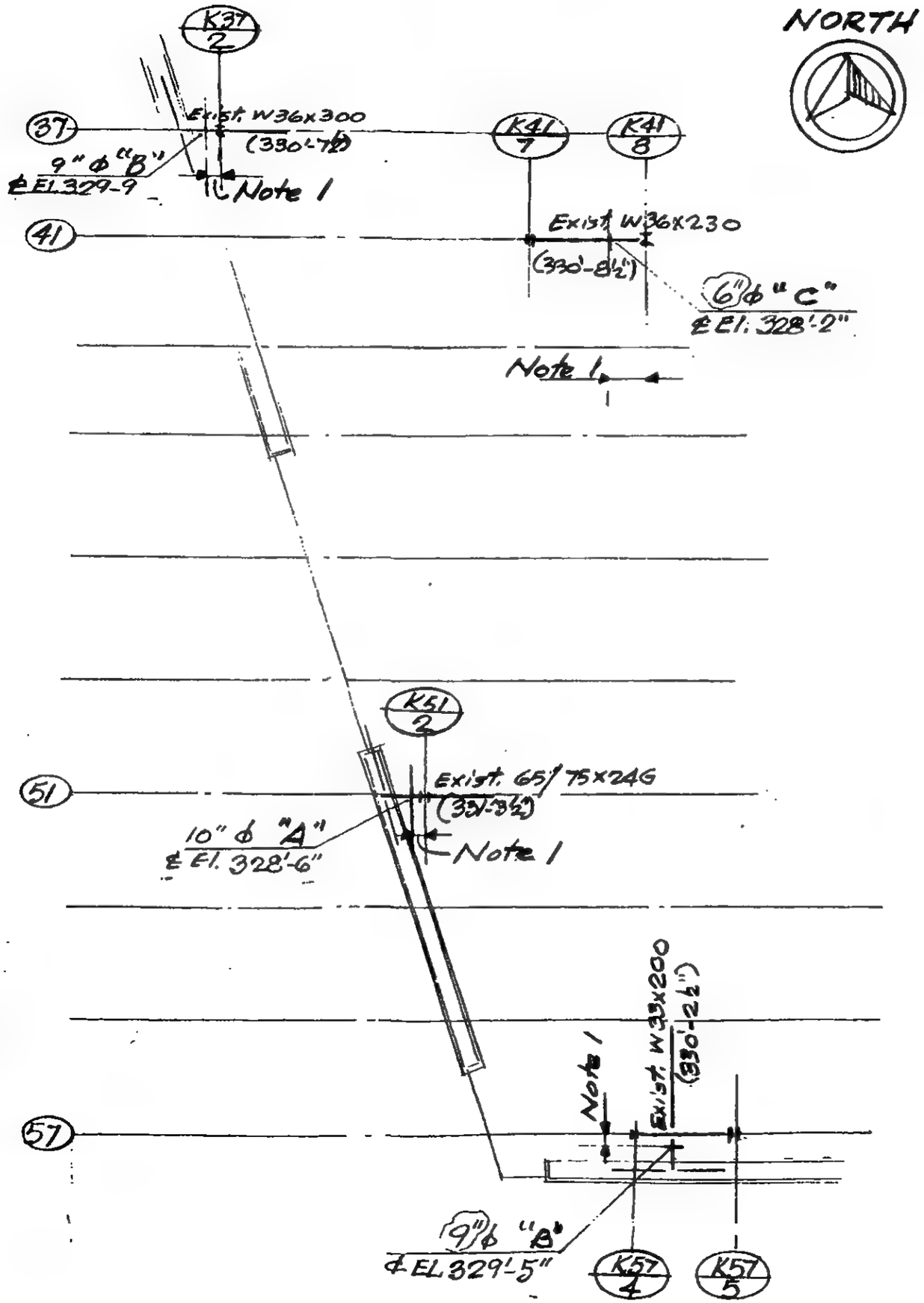

NOTES:

1. Plan location per approved Plumbing shop drawings.
2. All new ℄ ASTM-A36 All welding electrodes - E70XX low hydrogen type.
3. Work this dwg. with dwg. P 770.548-3 which is part of WTC 770.548.

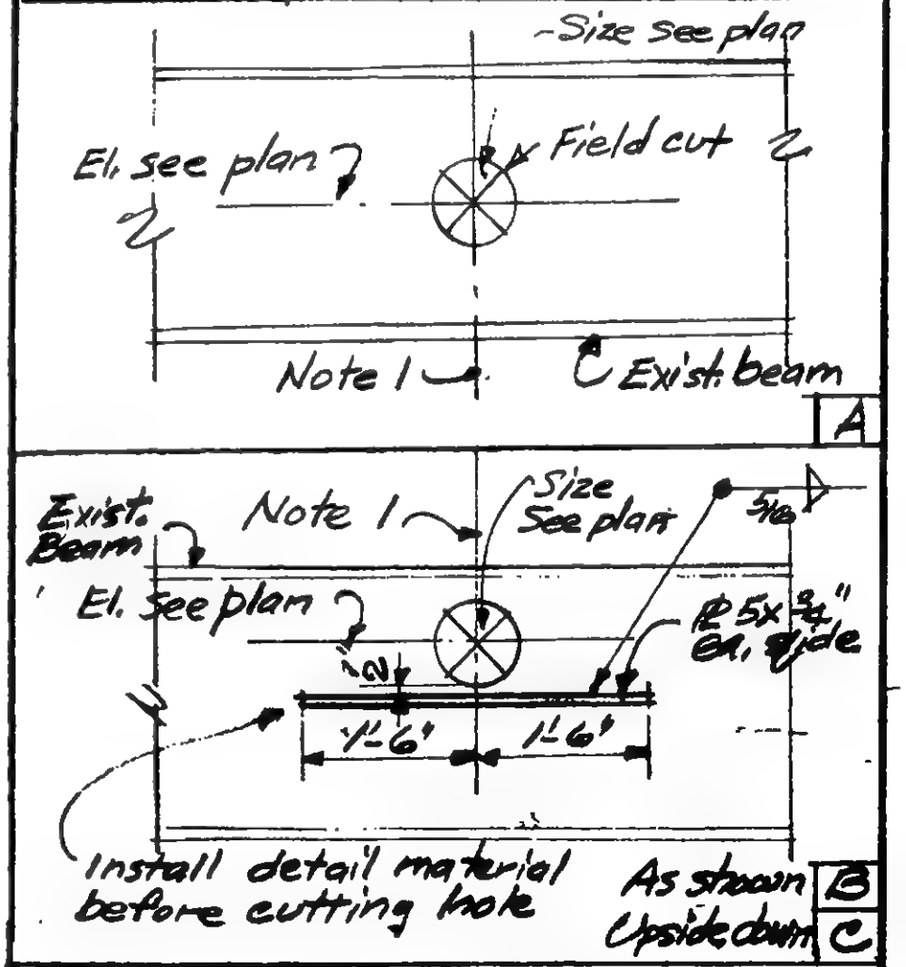

PART PLAN EL. 332
ZONE K1, K3 & K5
(NO SCALE)

LICENSED PROFESSIONAL ENGINEER — LESLIE E. ROBERTSON — No 34360 — UNIVERSITY OF THE STATE OF NEW YORK

DESIGNED

DRAWN

REVIEWED WOB

19-K-1098

SKILLING, HELLE, CHRISTIANSEN, ROBERTSON — Structural & Civil Engineers

PROJECT: THE WORLD TRADE CENTER | TITLE: TEL/CO REVISIONS- TOWER B FL. 11&12 | DATE: 7-9-71

REVISIONS

Col. Nº. 151, 153, 307, 309 Fl. 11&12
See Dwg. 68330-A-106 & A-107

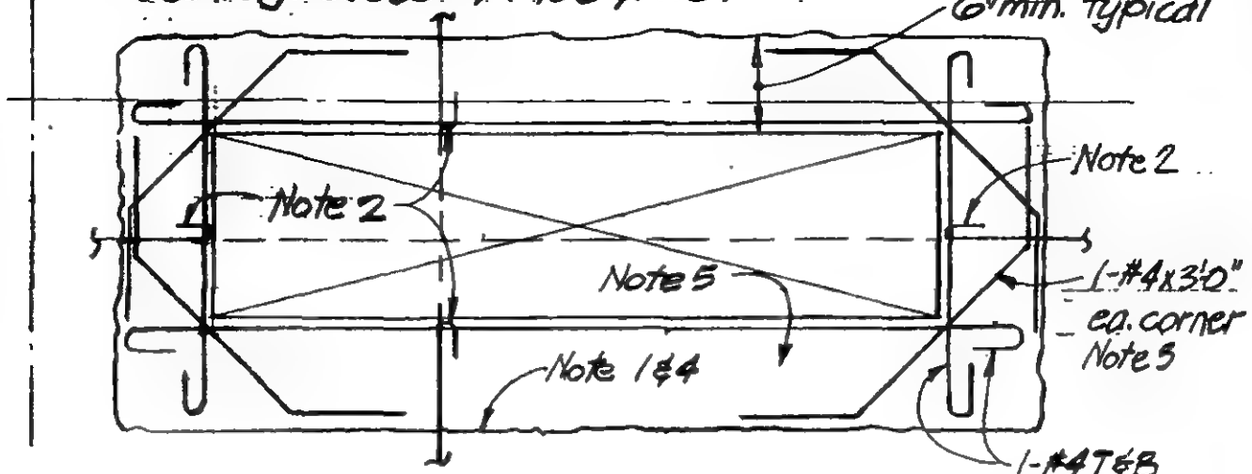

1'-0"x4'-0" openings

Col. 210, 223, 239, 246 Fl. 11
Col. 210 Fl. 12
See Dwg. 68330-A-106 & A-107

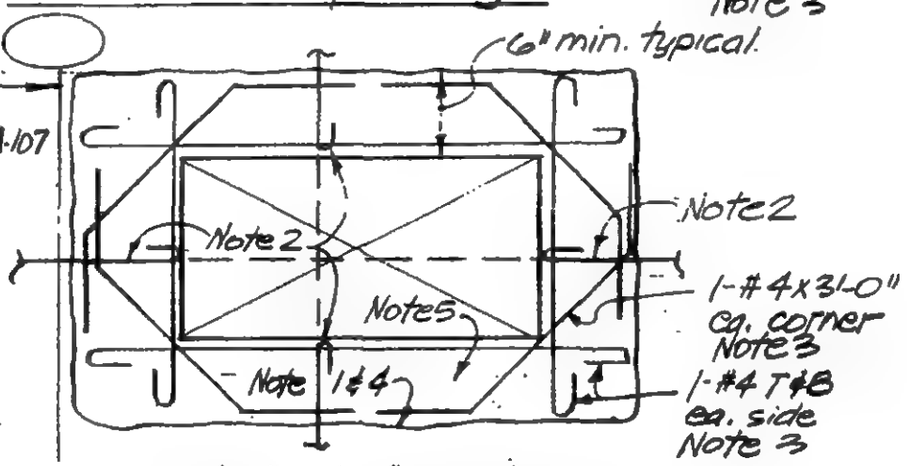

1'-0"x2'-0" Openings
Floor 11&12 as noted

Col. 223, 239, 246 Fl. 12
See Dwg. 68330-A-107

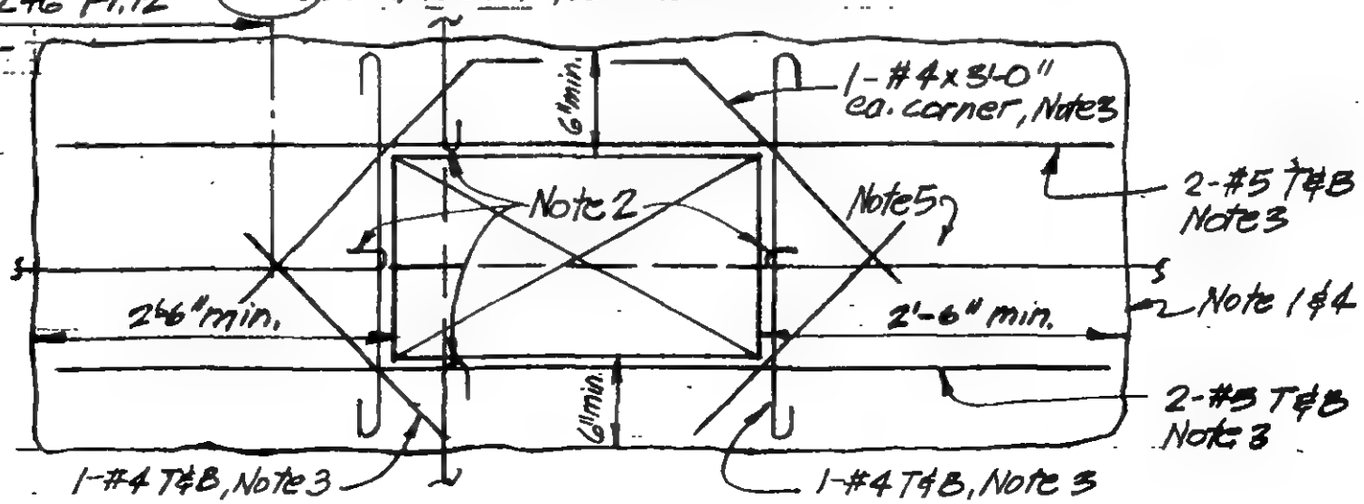

1'-0"x2'-0" Opening
Floor 12 as noted

Notes:
1. Remove existing concrete to line indicated without damaging existing reinf.
2. Cut existing reinf. and hook at edge of opening.
3. Add new reinf. as indicated.
4. Clean face of exist. concrete and thoroughly coat entire surface with epoxy bonding compound.
5. Cast slab to edge of new opening using approved "non-shrink" fc = 4000psi concrete.
6. Slabs to be shored as required before removing exist. concrete.

LICENSED PROFESSIONAL ENGINEER — LESLIE E. ROBERTSON — No. 34960 — UNIVERSITY OF THE STATE OF NEW YORK

DESIGNED

DRAWN P.M. Cecchi

REVIEWED

19-8-1100

SKILLING, HELLE, CHRISTIANSEN, ROBERTSON — Structural & Civil Engineers

PROJECT: THE WORLD TRADE CENTER | TITLE: TEL/CO. REVISIONS - TOWER B. El. 264-294 | DATE: 7-9-71

REVISIONS

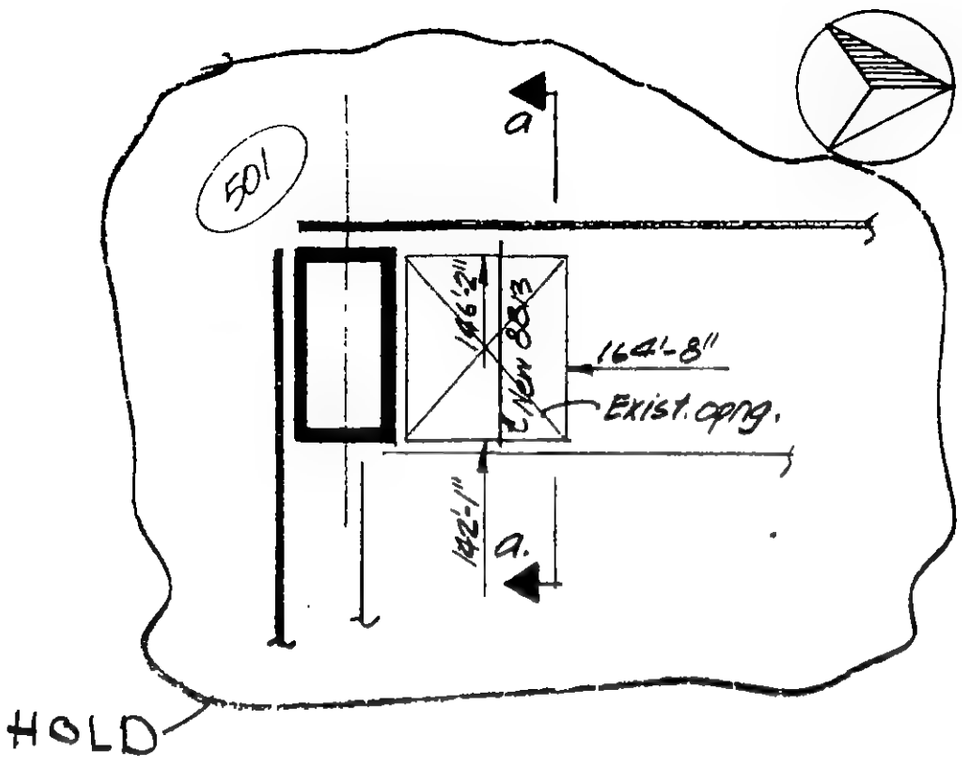

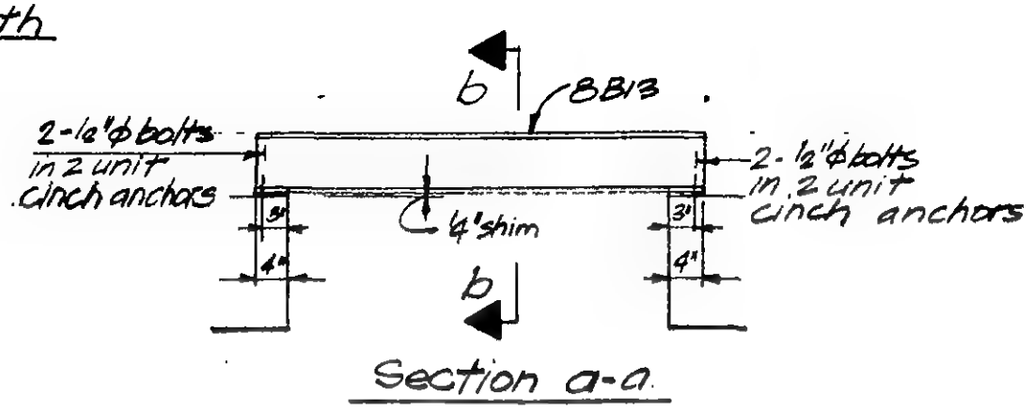

Section a-a

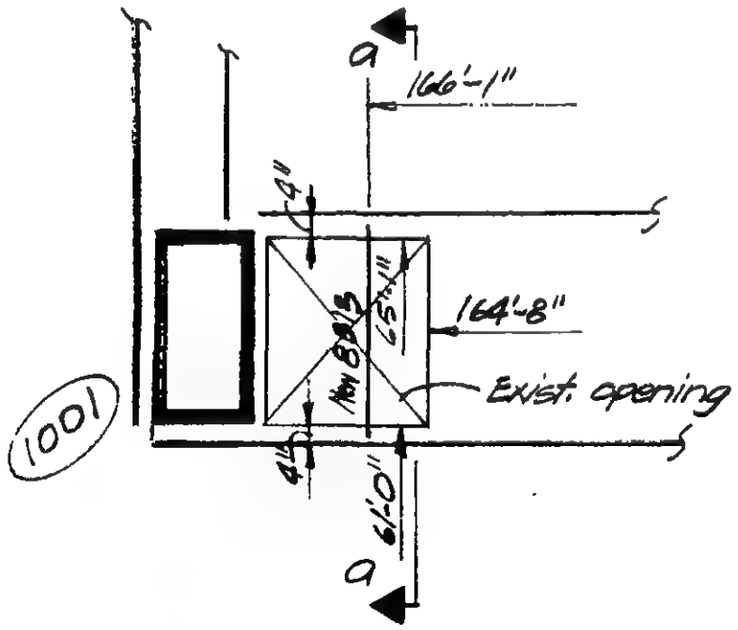

Part Plans
Elev. 264, 274, 284 & 294

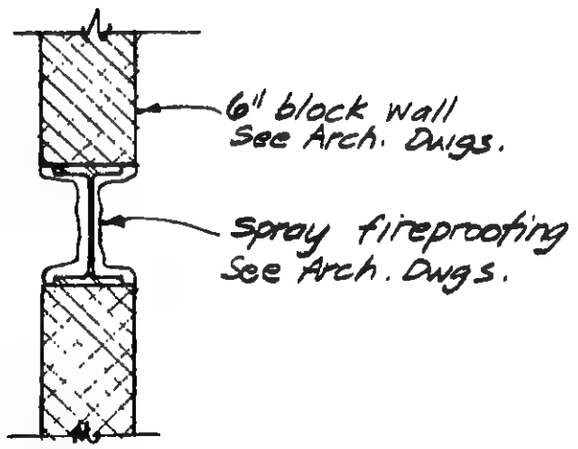

Section b-b

VOID

LICENSED PROFESSIONAL ENGINEER
LESLIE E. ROBERTSON
No 34360
UNIVERSITY OF THE STATE OF NEW YORK

DESIGNED

DRAWN
FM Ozeki

REVIEWED

19-B-1101

SKILLING, HELLE, CHRISTIANSEN, ROBERTSON — Structural & Civil Engineers

PROJECT: THE WORLD TRADE CENTER | TITLE: TEL/CO. REVISIONS - TOWER B FLOOR 7 | DATE: 7-9-71

REVISIONS
9-1-71
1-12-72

North

Note: Clean face of existing concrete and thoroughly coat entire surface with epoxy bonding compound and recast as indicated with approved non-shrink f'c = 4000psi concrete.

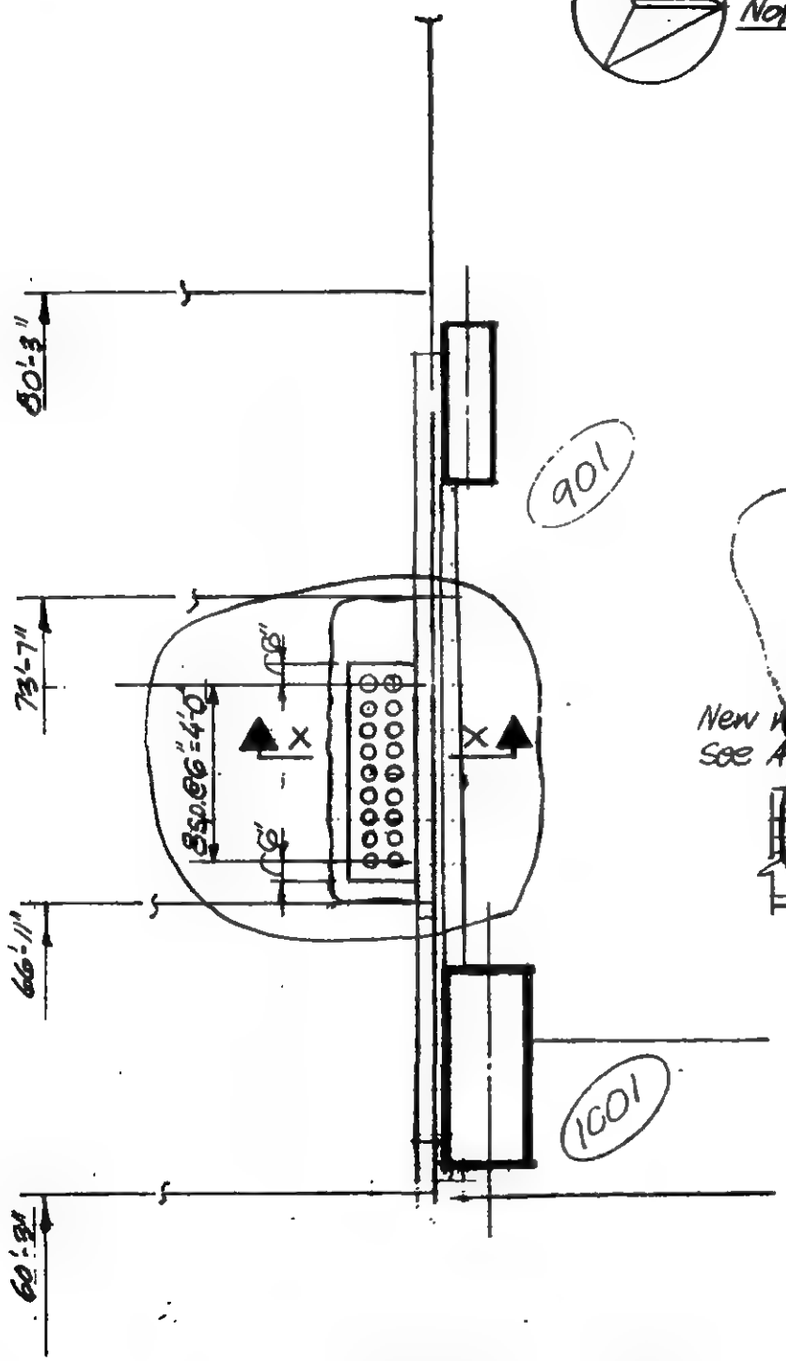

Part Plan Floor 7
Ref. SCA-17 & SCB-18

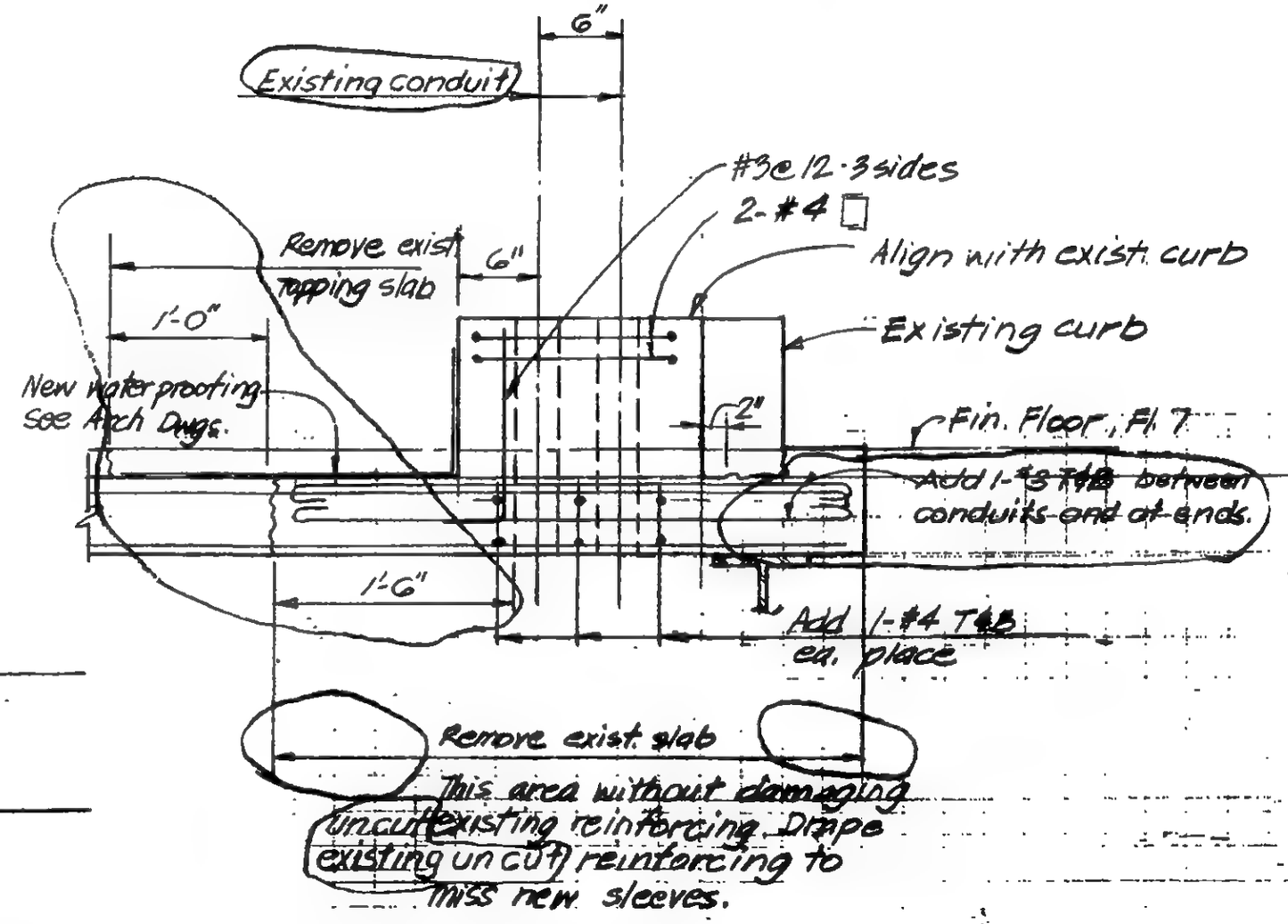

Section X-X

LICENSED PROFESSIONAL ENGINEER — LESLIE E. ROBERTSON — No. 34960 — UNIVERSITY OF THE STATE OF NEW YORK

DESIGNED
DRAWN
REVIEWED

19-B-1102

SKILLING, HELLE, CHRISTIANSEN, ROBERTSON — Structural & Civil Engineers

PROJECT: THE WORLD TRADE CENTER | TITLE: FLOOR 105B - BUFFER BEAM ELEV. 99 | DATE: 10/25/71

REVISIONS

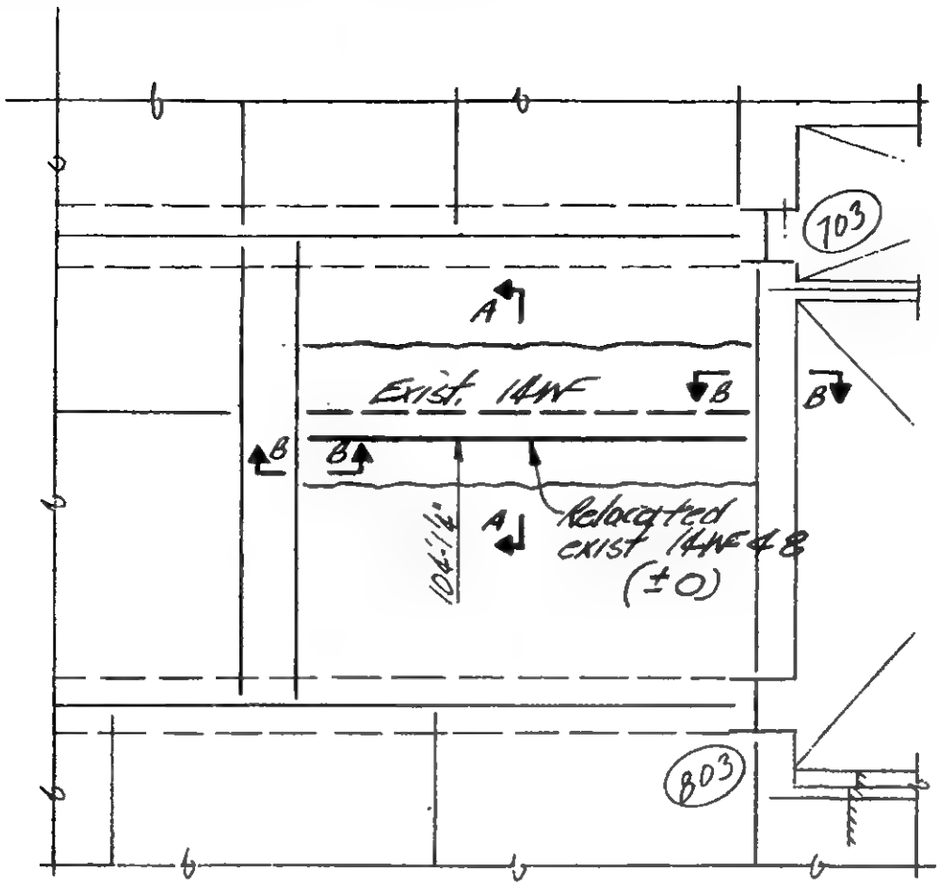

NOTES:

1. Remove existing concrete as indicated without damaging existing reinforcing.
2. Coat entire surface of existing slab with approved epoxy bonding compound.
3. Cast new slab with f'_c = 3000 psi lightweight aggregate approved "nonshrink" concrete.
4. Shore existing slab prior to removing concrete.

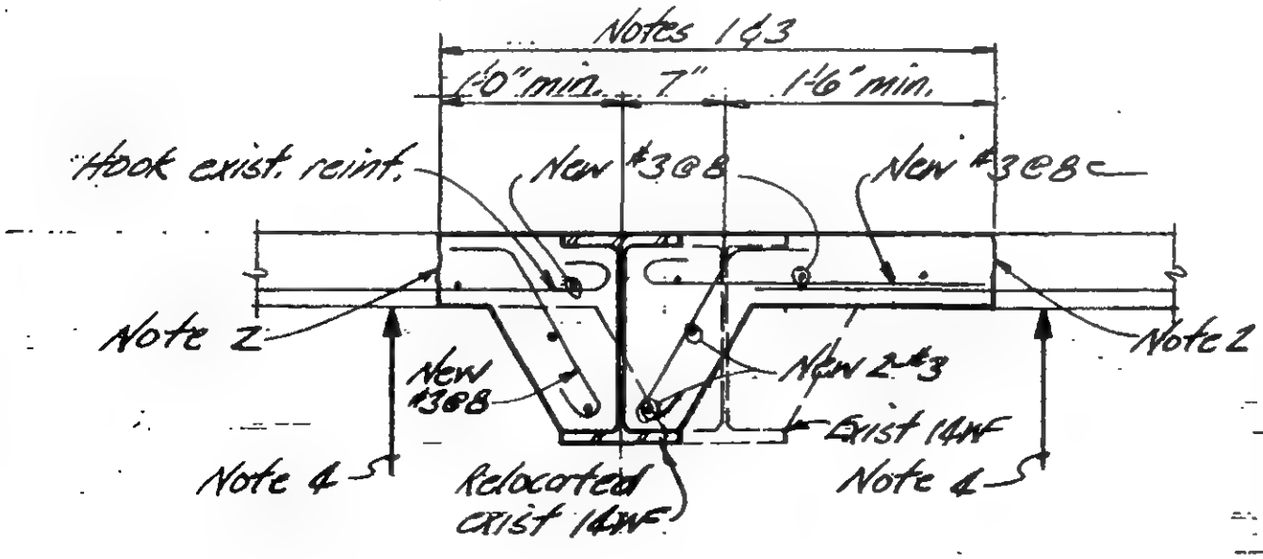

Section A-A

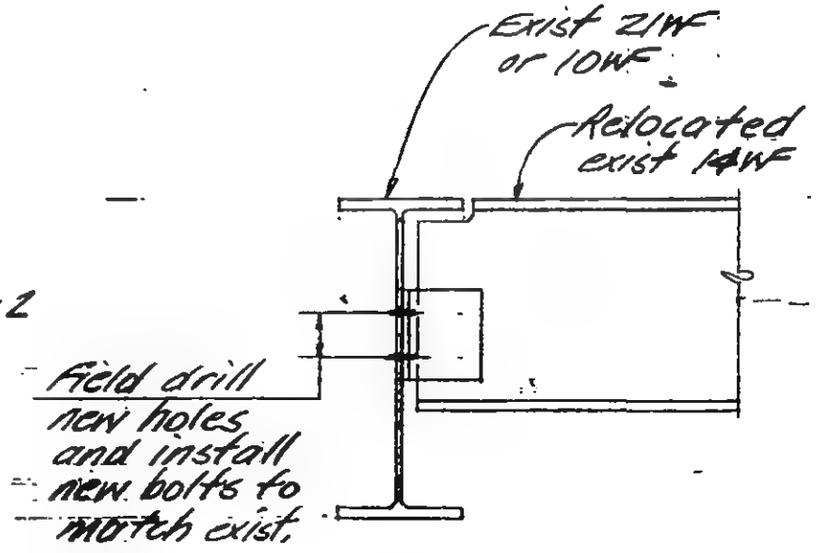

Section B-B

LICENSED PROFESSIONAL ENGINEER — LESLIE E. ROBERTSON — No. 34360 — UNIVERSITY OF THE STATE OF NEW YORK

DESIGNED

DRAWN

REVIEWED

19-B-1103

SKILLING, HELLE, CHRISTIANSEN, ROBERTSON — Structural & Civil Engineers

PROJECT: THE WORLD TRADE CENTER | TITLE: TOWER 1A + FLOOR 44 - PLAN | DATE: 12-10-71

REVISIONS

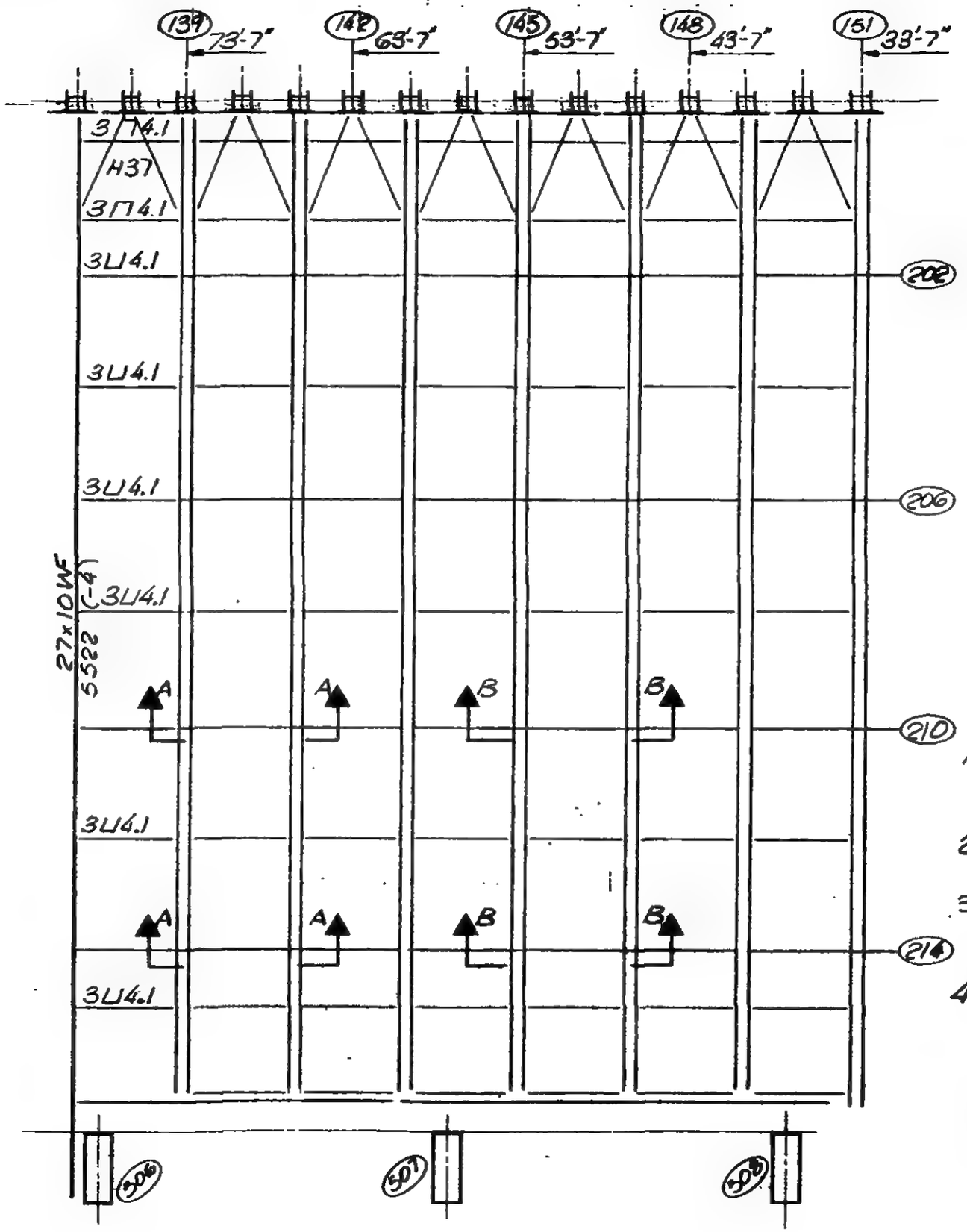

NORTH

Notes:

1. All work to be accomplished in accordance with project specification.
2. All new structural steel to be ASTM A36.
3. All new welds to be made using E70XX low hydrogen electrode.
4. Remove exist. spray fireproofing as required to accomplish new work then replace on existing and fireproof new work.

LICENSED PROFESSIONAL ENGINEER — LESLIE E. ROBERTSON — No. 34360 — UNIVERSITY OF THE STATE OF NEW YORK

DESIGNED

DRAWN T.R.

REVIEWED

19-A-1104.1

SKILLING, HELLE, CHRISTIANSEN, ROBERTSON — Structural & Civil Engineers

PROJECT: THE WORLD TRADE CENTER | TITLE: TOWER A - FLOOR 44 - SECTION | DATE: 12-10-71

REVISIONS

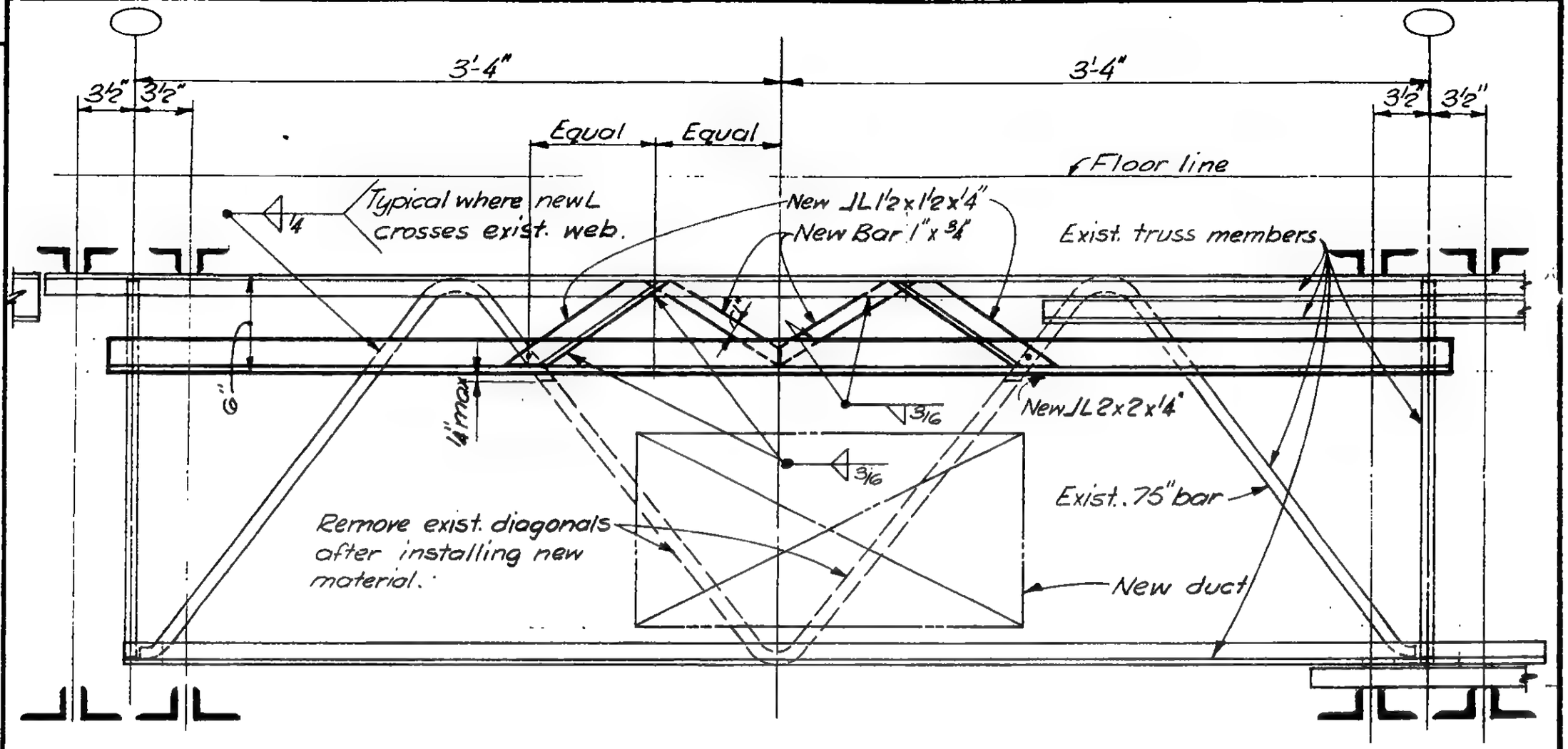

SECTION A-A

LICENSED PROFESSIONAL ENGINEER
LESLIE E. ROBERTSON
No. 34360
UNIVERSITY OF THE STATE OF NEW YORK

DESIGNED

DRAWN T.R.

REVIEWED

19-A-1104.2

SKILLING, HELLE, CHRISTIANSEN, ROBERTSON — Structural & Civil Engineers

PROJECT THE WORLD TRADE CENTER | TITLE TOWER A - FLOOR 44 - SECTION | DATE 12-10-71

REVISIONS

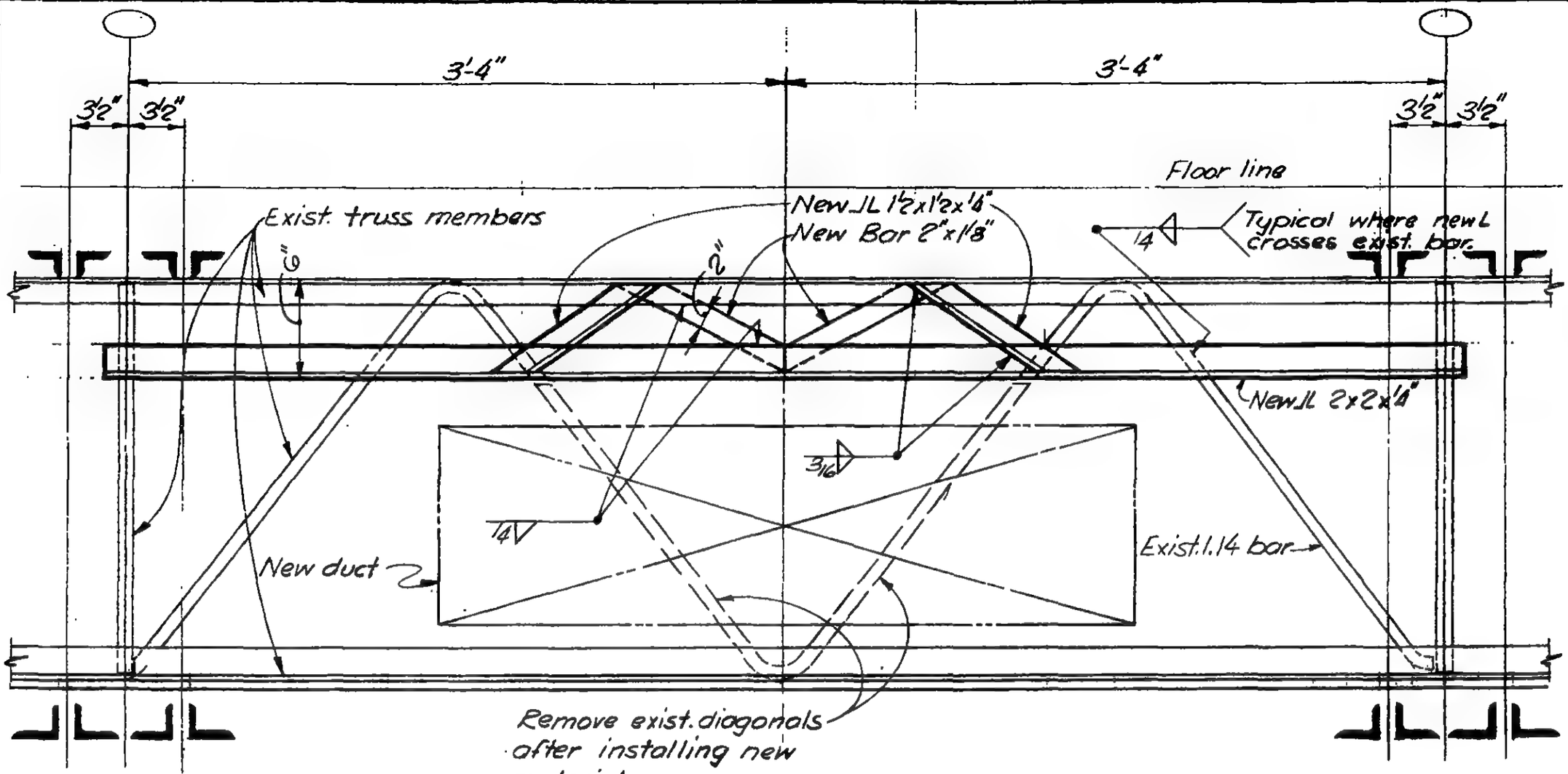

SECTION B-B

LICENSED PROFESSIONAL ENGINEER
LESLIE E. ROBERTSON
No. 34360
UNIVERSITY OF THE STATE OF NEW YORK

DESIGNED

DRAWN
T.R.

REVIEWED

19-A-1104.3

SKILLING, HELLE, CHRISTIANSEN, ROBERTSON — Structural & Civil Engineers

PROJECT: ~~THE WORLD TRADE CENTER~~ | TITLE: ~~HEAT EXCHANGER & PUMP BASE~~ - TOWER A FLOOR 43 | DATE: 12/14/71

REVISIONS
2/18/72

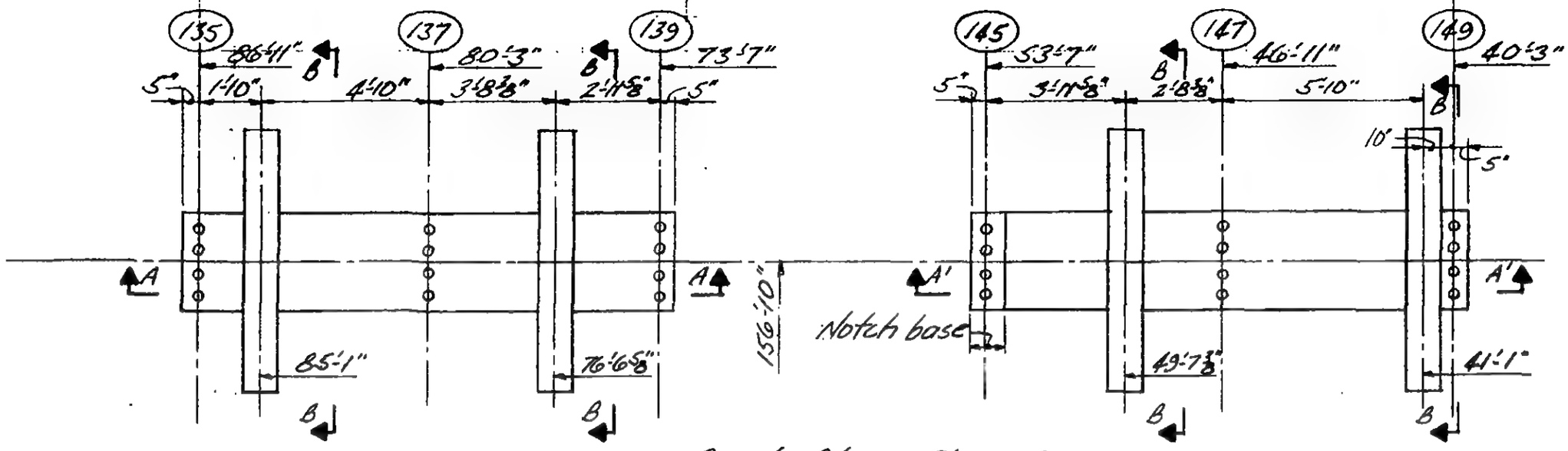

Part Plan - Floor 43

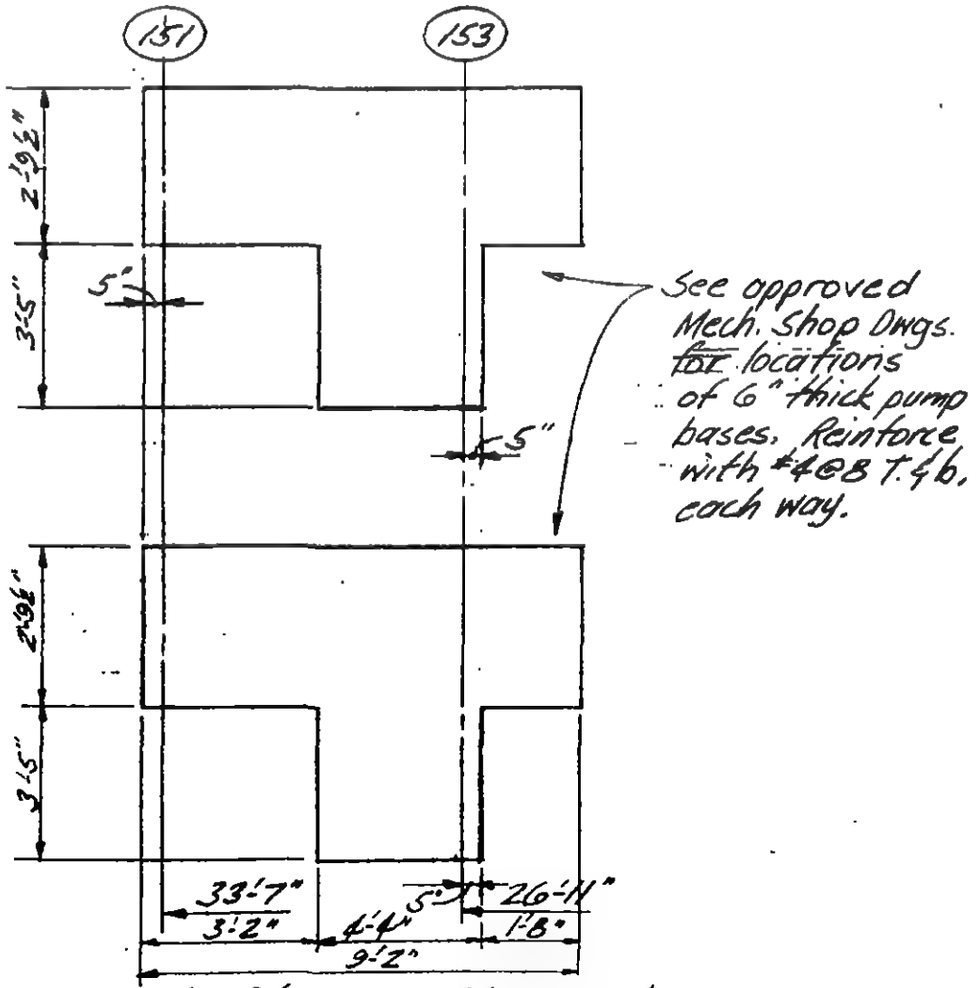

See approved Mech. Shop Dwgs. ~~for~~ locations of 6" thick pump bases. Reinforce with #4@8 T.&b. each way.

Part Plan - Floor 43

Notes:
1. All work and materials shall conform to project specifications.
2. All concrete shall be stone aggregate concrete f'_c = 3000 psi.
3. All dimensions and locations shall be verified with, and all embeded items shall be coordinated with, approved Mechanical Shop Drawings ~~before~~ casting concrete bases.

LICENSED PROFESSIONAL ENGINEER — LESLIE E. ROBERTSON — No. 34980 — UNIVERSITY OF THE STATE OF NEW YORK

DESIGNED
DRAWN J. Adams
REVIEWED W Brewer

19-A-1105.1

SKILLING, HELLE, CHRISTIANSEN, ROBERTSON — Structural & Civil Engineers

PROJECT: THE WORLD TRADE CENTER | TITLE: HEAT EXCHANGER & PUMP BASE - TOWER A FLOOR 43 | DATE: 12/14/71

REVISIONS

2/18/72

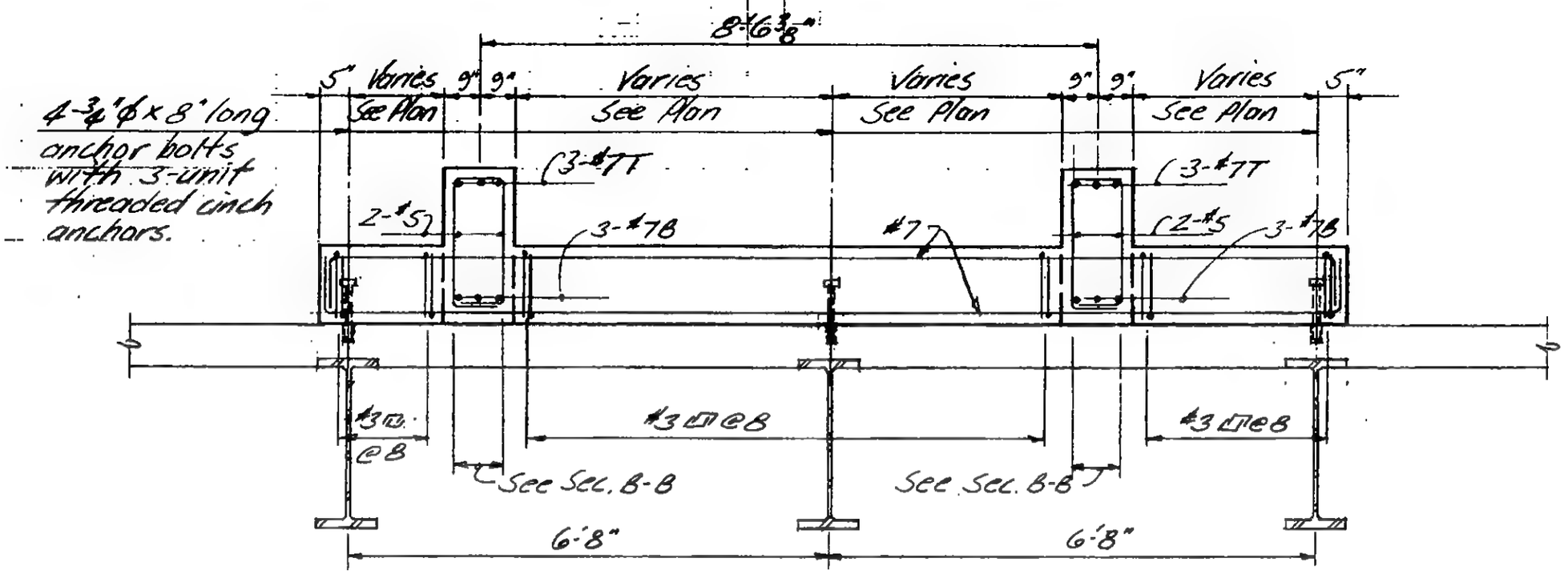

Section A-A

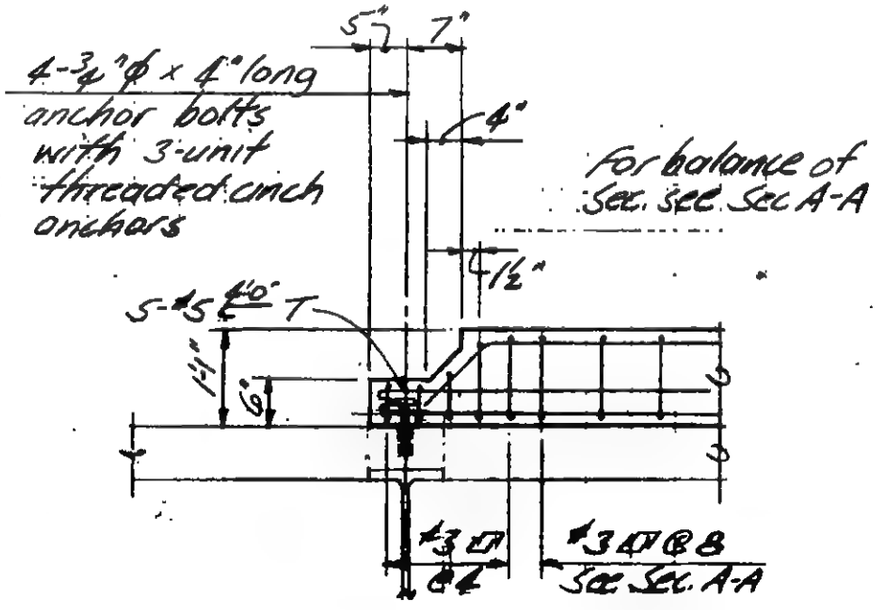

Section A'-A'

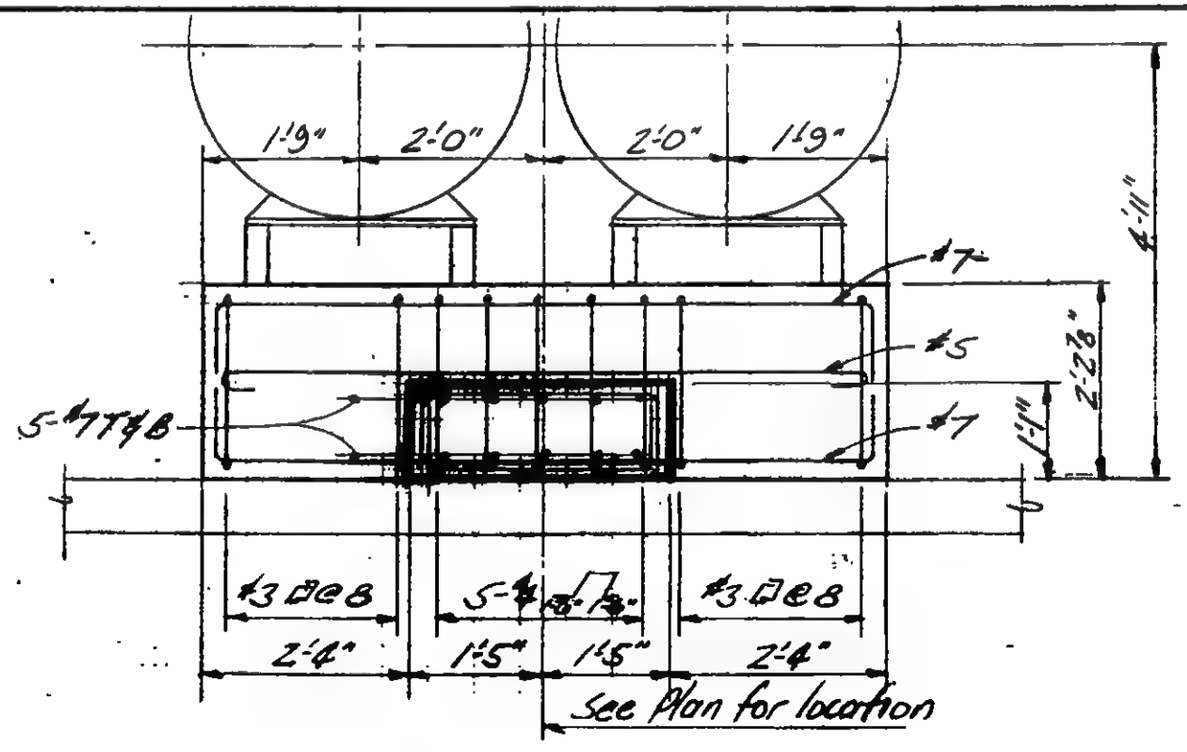

Section B-B

LICENSED PROFESSIONAL ENGINEER — LESLIE E. ROBERTSON — No. 34860 — UNIVERSITY OF THE STATE OF NEW YORK

DESIGNED

DRAWN: J. Adams

REVIEWED: W Brewer

19-A-1105.2

File: WTC 117
WTC TEL/CO

SKILLING, HELLE, CHRISTIANSEN, ROBERTSON — Structural & Civil Engineers

PROJECT: THE WORLD TRADE CENTER

TITLE: TEL/CO REVISIONS TOWER B FL. 9 & 10

DATE: 12-13-71

REVISIONS

1-12-72
General Rev.

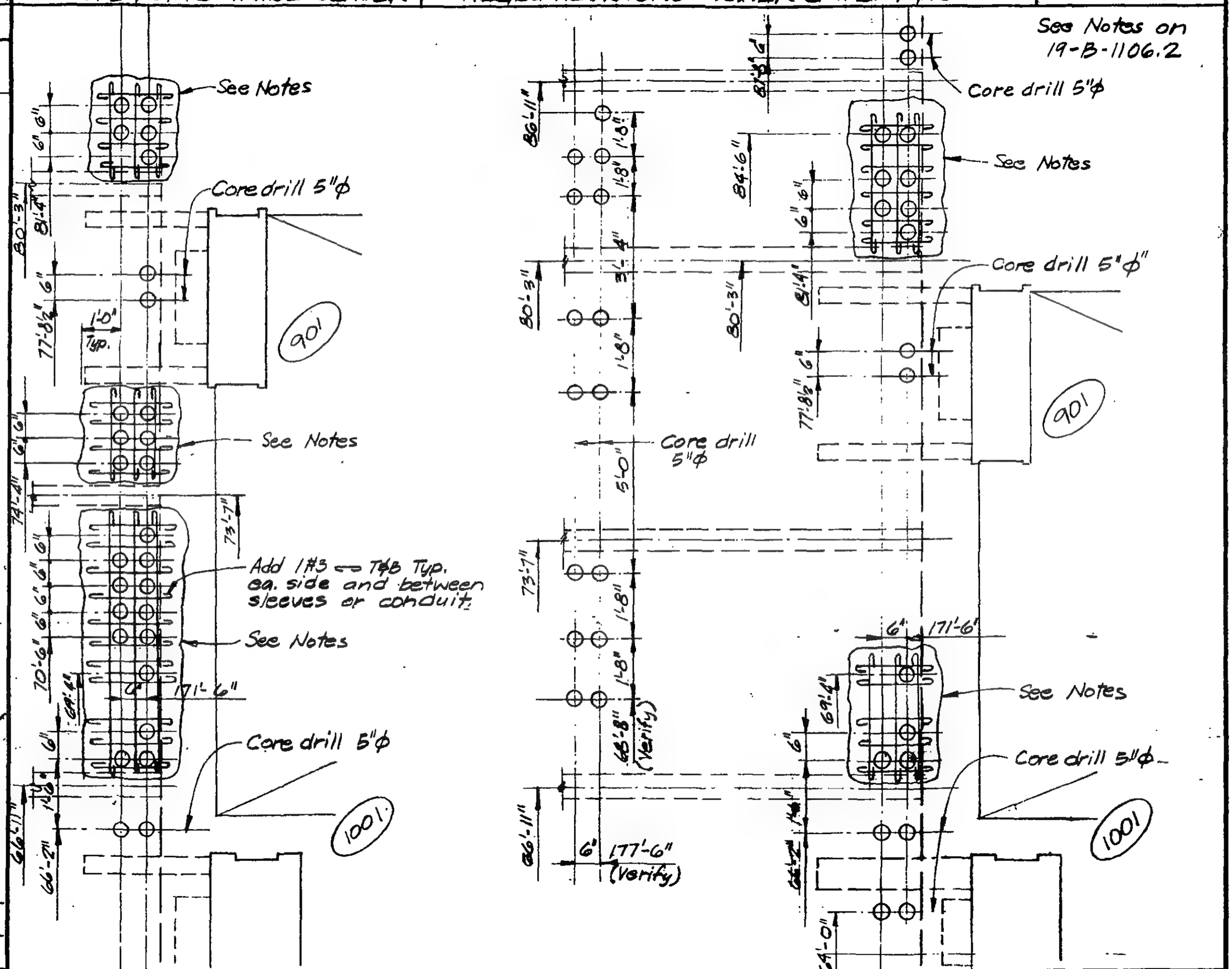

Floor 9

Floor 10

19-B-1106.1

LICENSED PROFESSIONAL ENGINEER
LESLIE E. ROBERTSON
No. 34360
UNIVERSITY OF THE STATE OF NEW YORK

DESIGNED

DRAWN P.M. Orlin

REVIEWED

File: WTC 1117 WTC Tel/Co

SKILLING, HELLE, CHRISTIANSEN, ROBERTSON — Structural & Civil Engineers

PROJECT: THE WORLD TRADE CENTER | TITLE: TEL/CO REVISIONS TOWER B FL. 11 & 12 | DATE: 12-13-71

REVISIONS

1-12-72 General Rev.

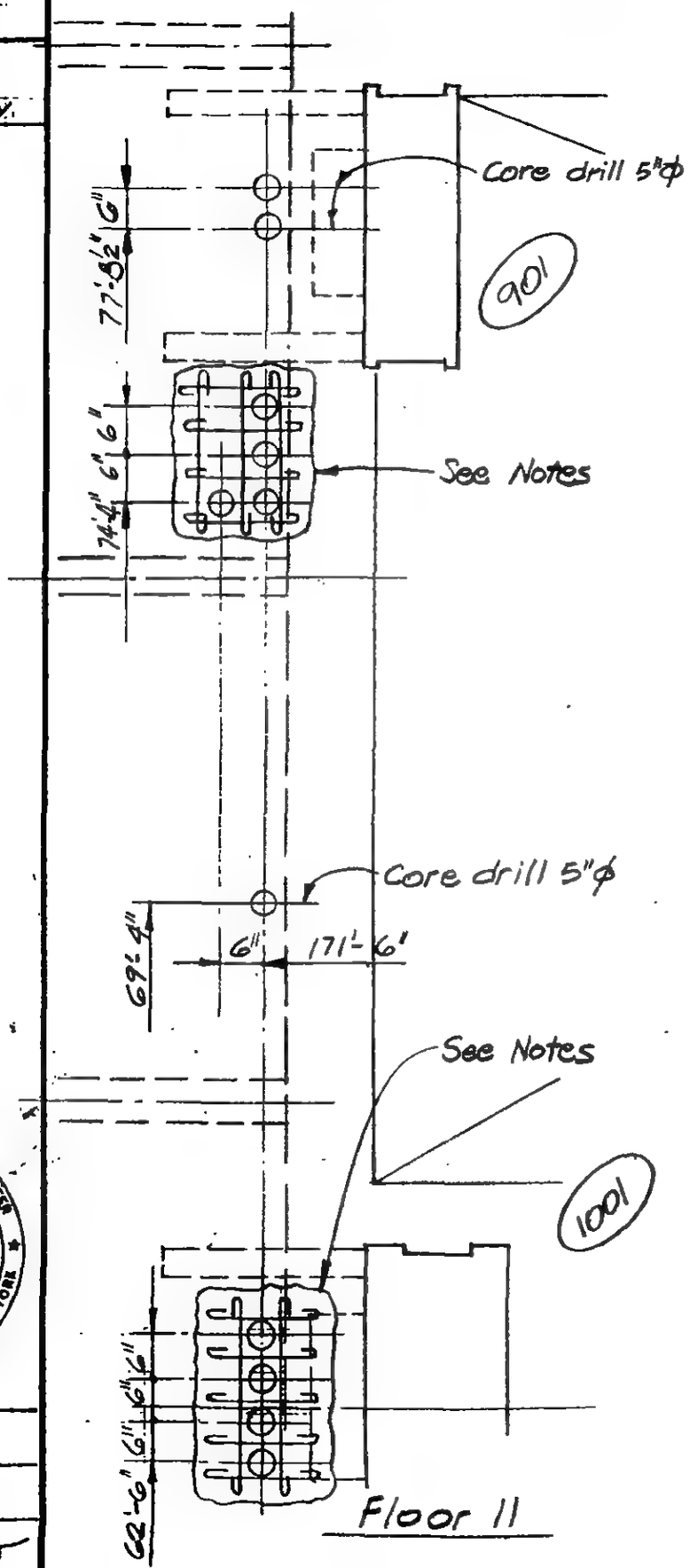

Floor 11

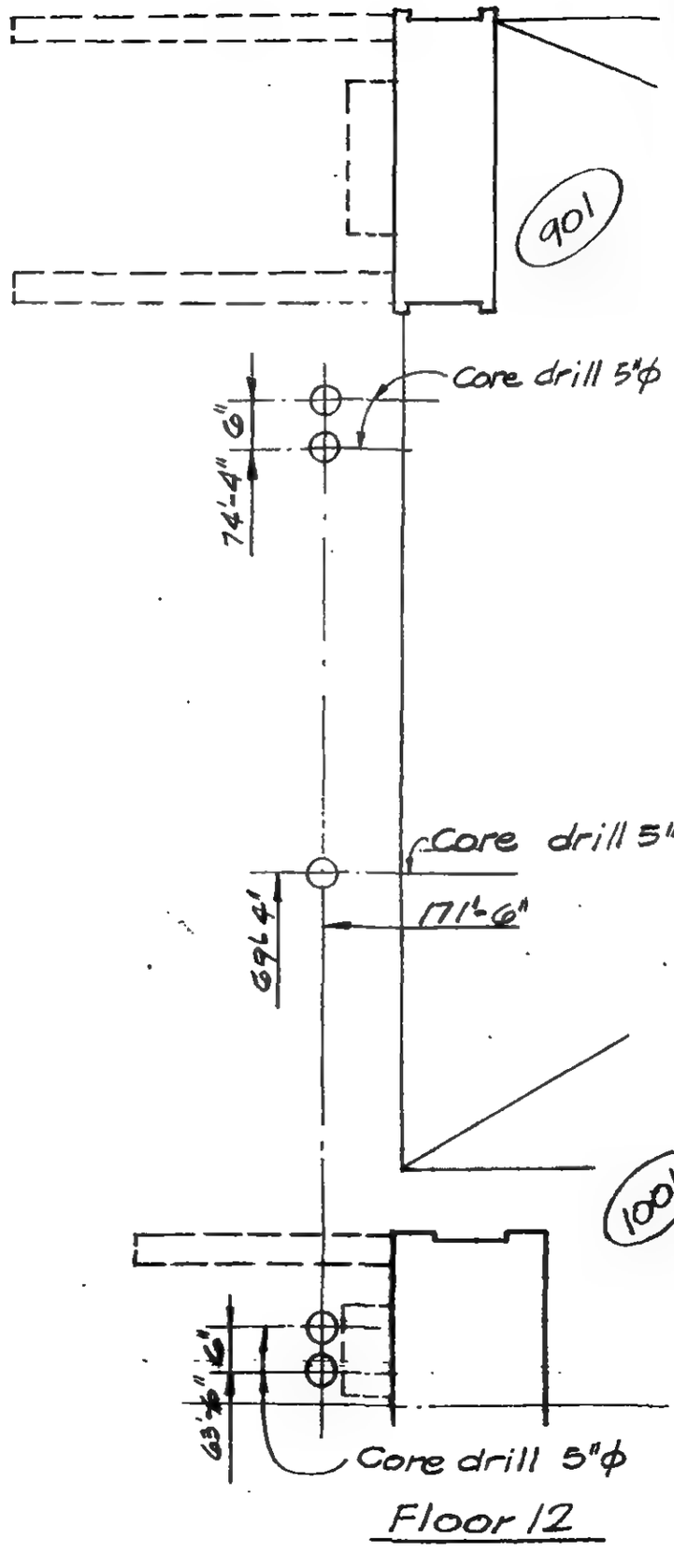

Floor 12

Notes:

1. Remove existing concrete to line indicated without damaging existing reinf.
2. Adjust existing reinf. without cutting to clear new sleeves or conduits.
3. Add new reinf. as indicated.
4. Clean face of exist. concrete and thoroughly coat entire surface with epoxy bonding compound.
5. Cast slab around new sleeves or conduits using approved "non-shrink" f'c = 4000 psi concrete.
6. Slabs to be shored as required before removing existing concrete.

LICENSED PROFESSIONAL ENGINEER — LESLIE E. ROBERTSON — No. 34360 — UNIVERSITY OF THE STATE OF NEW YORK

DESIGNED

DRAWN P MOrelli

REVIEWED W Brewer

19-B-1106.2

SKILLING, HELLE, CHRISTIANSEN, ROBERTSON — Structural & Civil Engineers

PROJECT: THE WORLD TRADE CENTER | TITLE: ENLARGE BEAM OPENING - TOWER B FL 108 | DATE: 12-13-71

REVISIONS

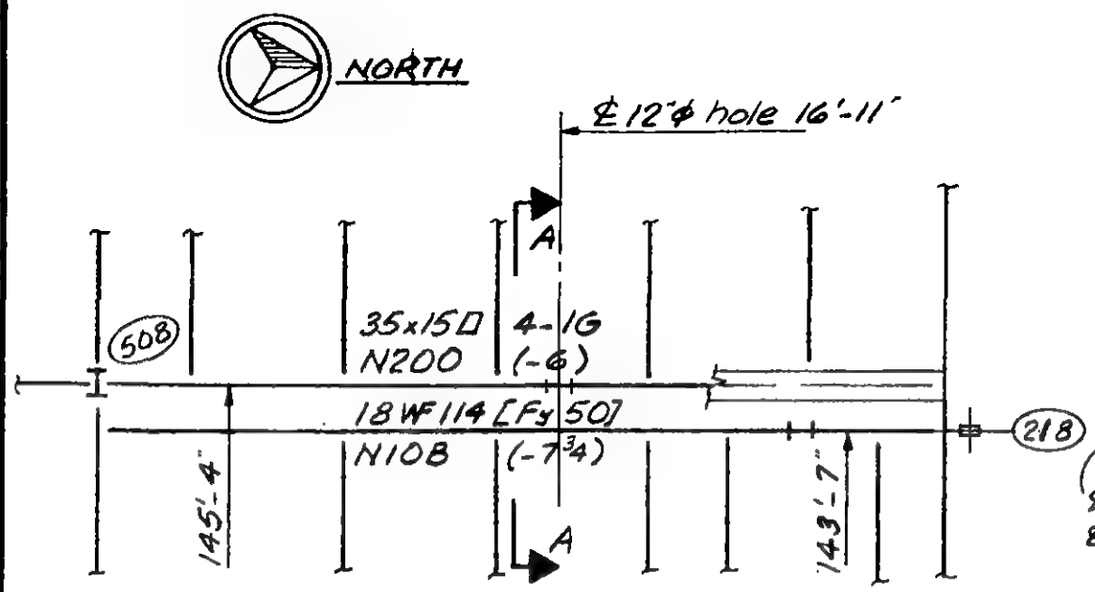

PART PLAN - FLOOR 108

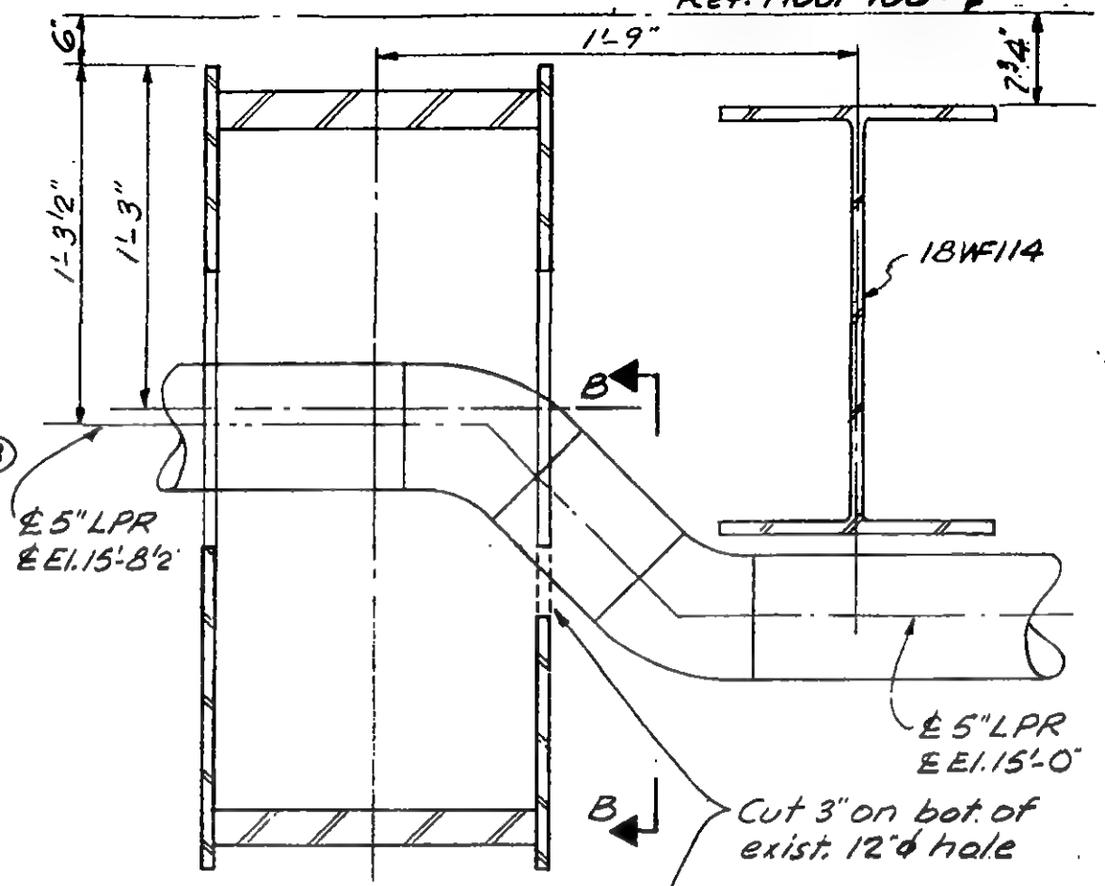

Section A-A

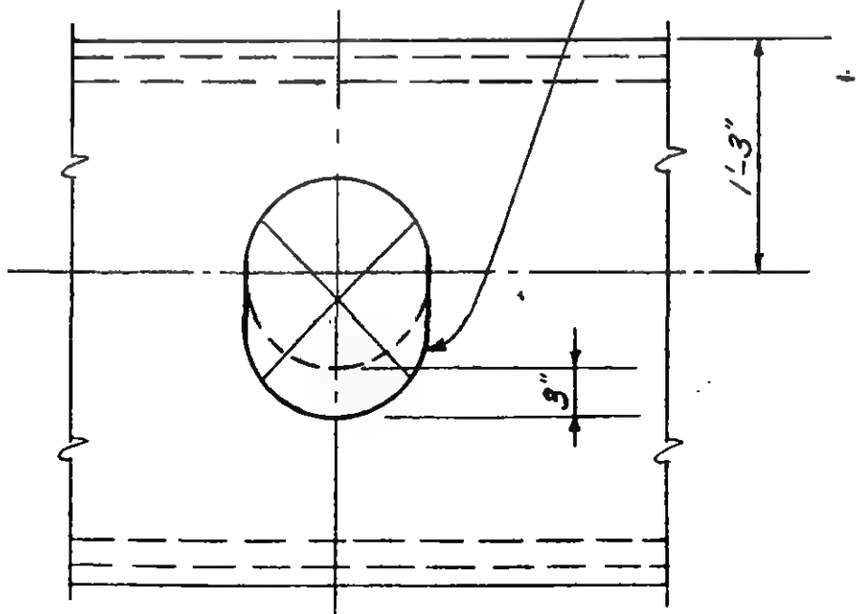

Section B-B

LICENSED PROFESSIONAL ENGINEER — LESLIE E. ROBERTSON — No. 34360 — UNIVERSITY OF THE STATE OF NEW YORK

DESIGNED: W. BREWER

DRAWN: A. FRANQUI

REVIEWED: W. Brewer

19-B-1107

SKILLING. HELLE CHRISTIANSEN. ROBERTSON — Structural & Civil Engineers

PROJECT: THE WORLD TRADE CENTER | TITLE: TOWER B - P.H. - SHAFT 50 EXTENSION | DATE: 1-10-72

REVISIONS

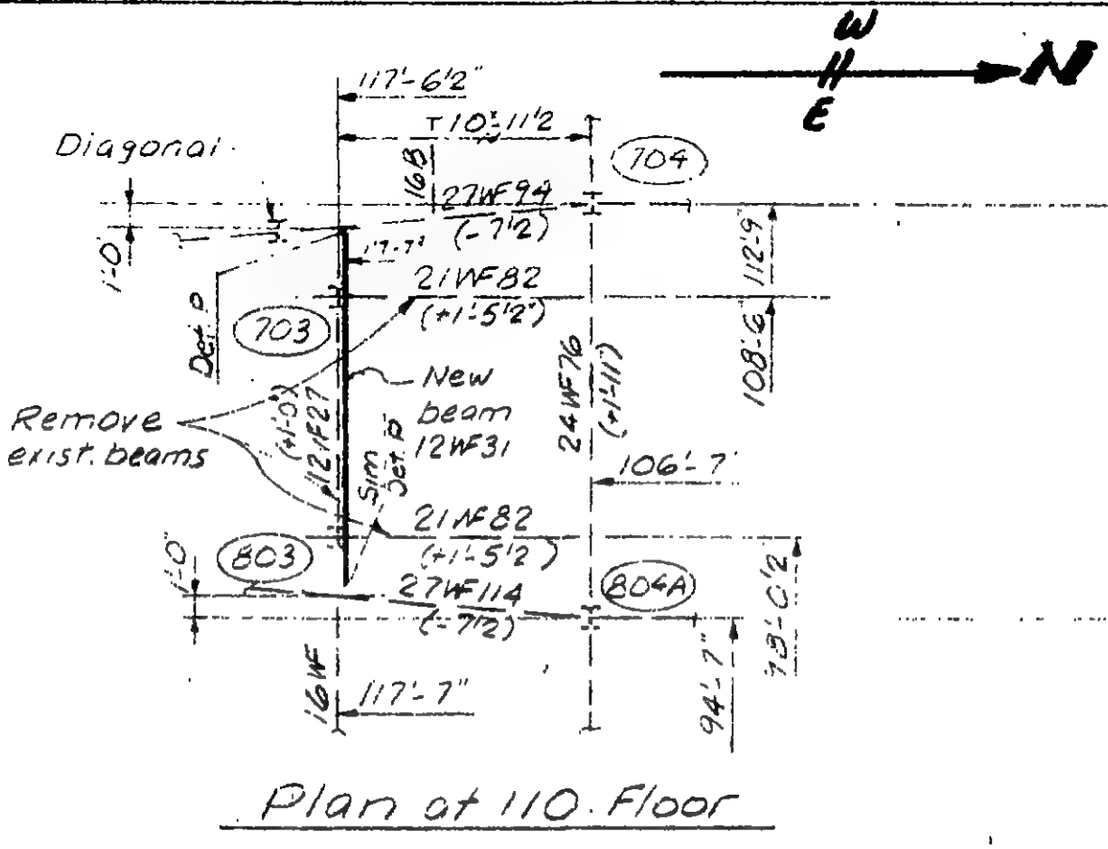

Plan at 110. Floor

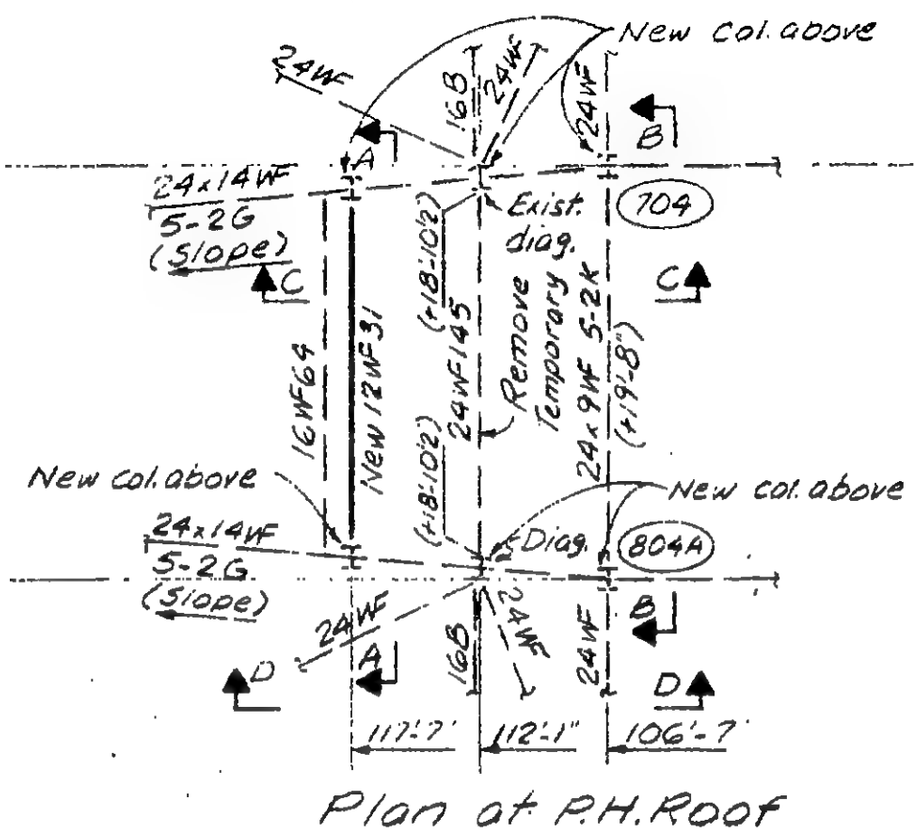

Plan at P.H. Roof

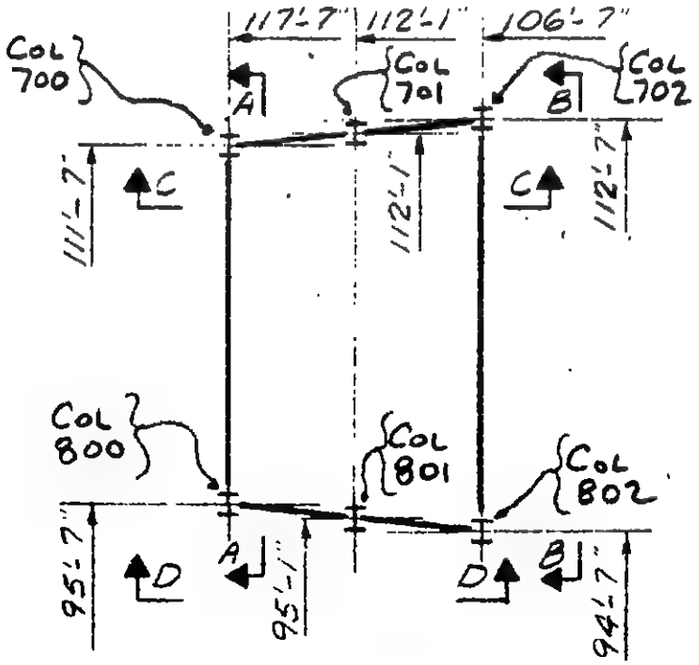

Plan above P.H. Roof
(NEW COLUMNS)

Notes:

1. All new material shall be A-36 steel.
2. All bolts shall be A-325 Friction Type.
3. All welds shall be E-70xx low hydrogen Electrodes.
4. All new material shall be detailed from field determined dimensions.
5. Remove all new material as indicated on details as directed by the Engineer.
6. All construction to be in accordance with the "Project" specification.

LICENSED PROFESSIONAL ENGINEER — LESLIE E. ROBERTSON — No 34960 — UNIVERSITY OF THE STATE OF NEW YORK

DESIGNED M. RAMANI
DRAWN A. FRANQUI
REVIEWED

SKILLING - HELLE CHRISTIANSEN - ROBERTSON
Structural & Civil Engineers
☑ APPROVED
☐ APPROVED AS NOTED
☑ RESUBMIT
☐ REJECTED
Date 3/2/72 By ALR

RECEIVED
FEB 14 1972
SKILLING - HELLE CHRISTIANSEN - ROBERTSON
230 PARK AVE. N.Y.C.

ERECTION PLAN
E1
19-B-1103.1

SKILLING, HELLE, CHRISTIANSEN, ROBERTSON — Structural & Civil Engineers

PROJECT: THE WORLD TRADE CENTER | TITLE: TOWER B - P.H.-SHAFT 50 EXTENSION | DATE: 1-10-72

REVISIONS

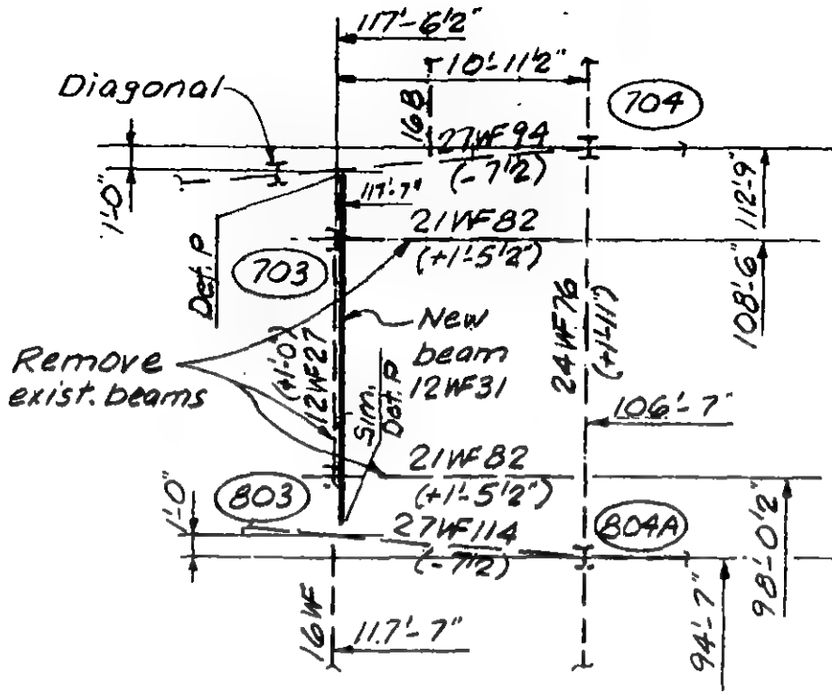

Plan at 110 Floor

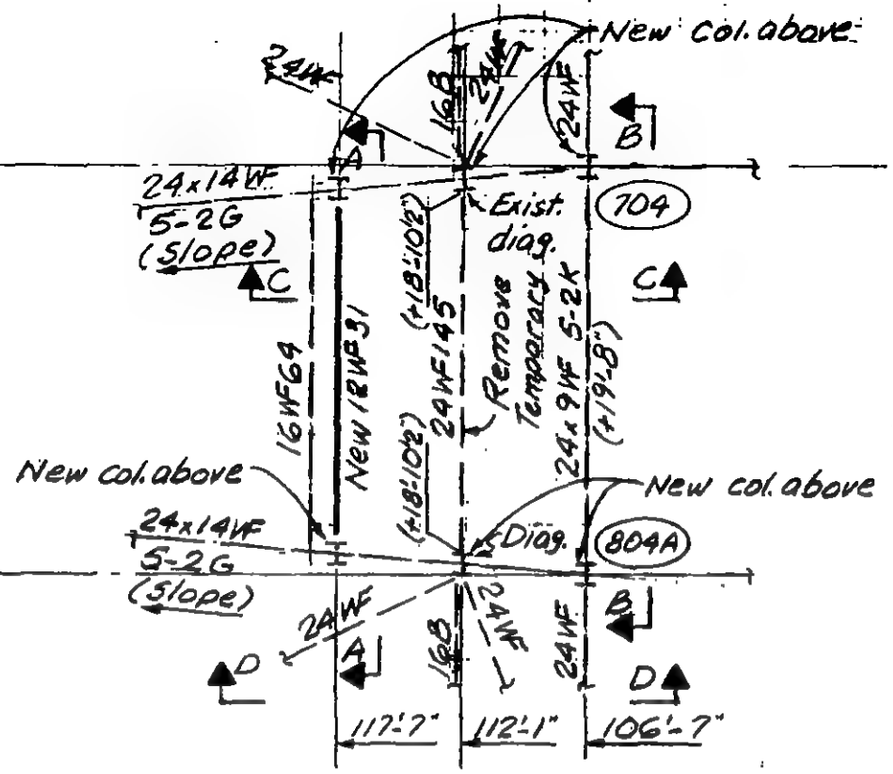

Plan at P.H. Roof

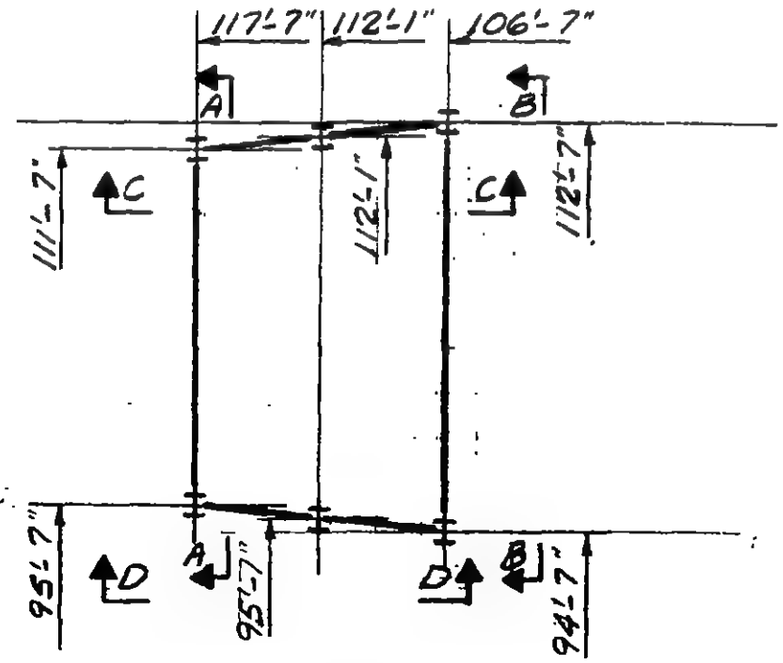

Plan above P.H. Roof

Notes:

1. All new material shall be A-36 steel.
2. All bolts shall be A-325 Friction Type.
3. All welds shall be E-70xx low hydrogen Electrodes.
4. All new material shall be detailed from field determined dimensions.
5. Remove all new material as indicated on details as directed by the Engineer.
6. All construction to be in accordance with the "Project" specification.

LICENSED PROFESSIONAL ENGINEER — LESLIE E. ROBERTSON — No. 34960 — UNIVERSITY OF THE STATE OF NEW YORK

DESIGNED M. RAMANI

DRAWN A. FRANQUI

REVIEWED

19-B-1108.1

SKILLING, HELLE, CHRISTIANSEN, ROBERTSON — Structural & Civil Engineers

PROJECT: THE WORLD TRADE CENTER | TITLE: TOWER B-PH-SHAFT 50 EXTENSION | DATE: 1-10-72

REVISIONS

R

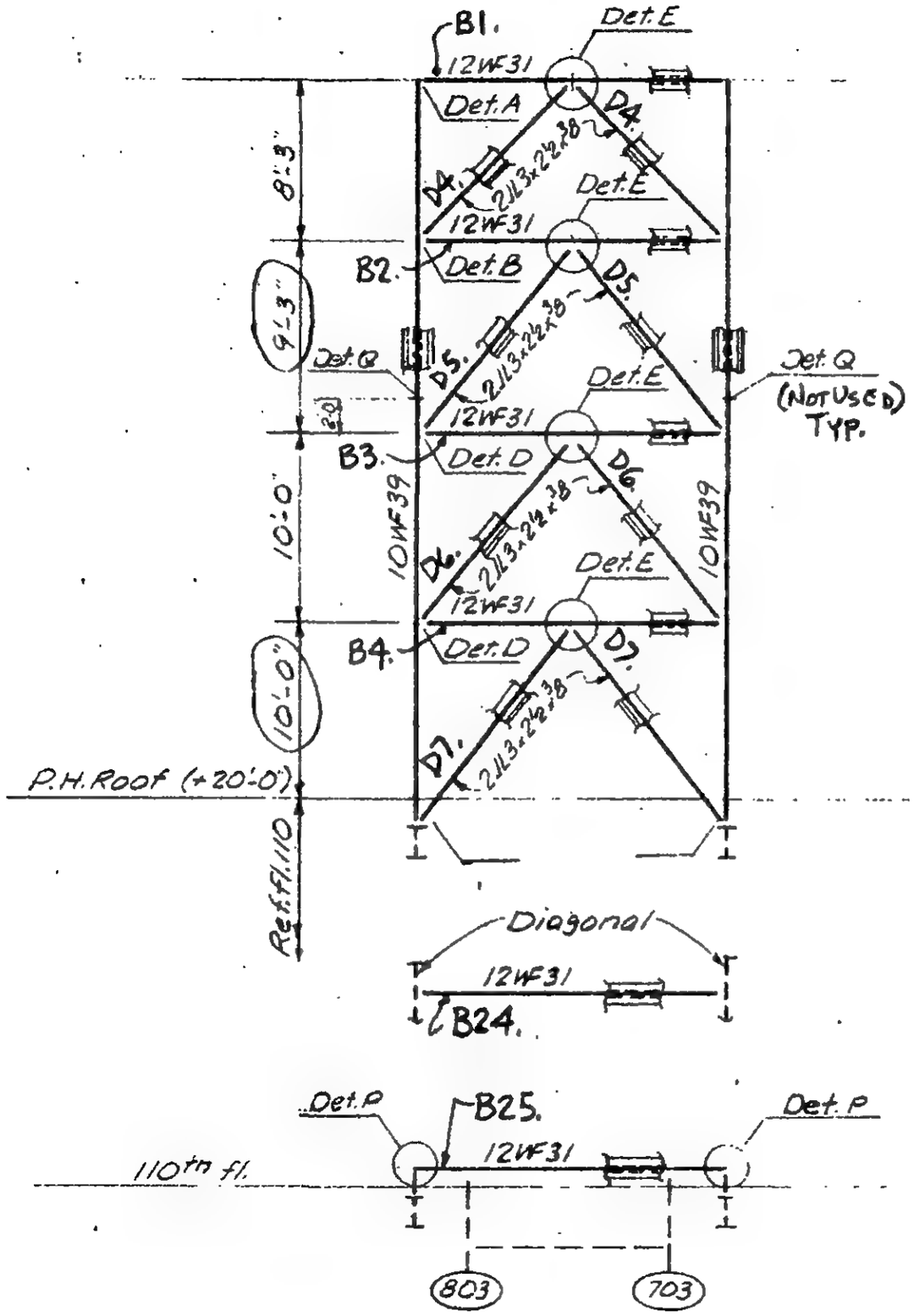

Section A-A

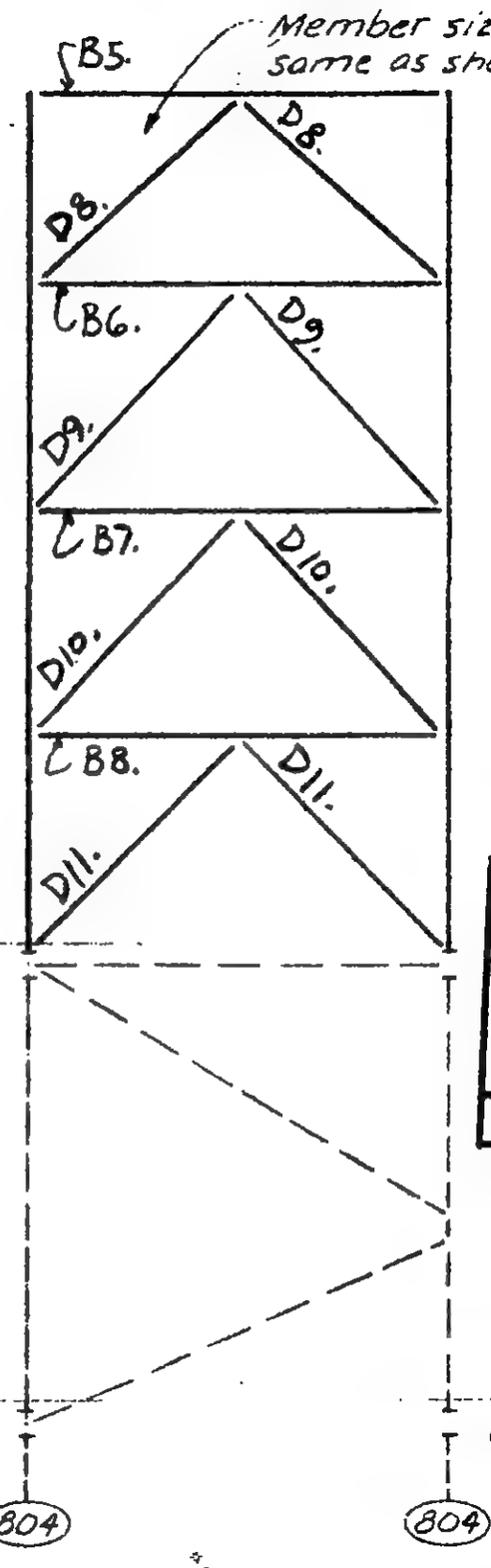

Section-B-B

SKILLING - HELLE CHRISTIANSEN - ROBERTSON
Structural & Civil Engineers

- [x] APPROVED
- [ ] APPROVED AS NOTED
- [x] RESUBMIT
- [ ] REJECTED

Date 3/2/72 By ALR

RECEIVED

FEB 11 1972

SKILLING - HELLE CHRISTIANSEN - ROBERTSON 230 PARK AVE. N.Y.C.

LICENSED PROFESSIONAL ENGINEER — LESLIE E. ROBERTSON — No. 34360 — UNIVERSITY OF THE STATE OF NEW YORK

DESIGNED M. RAMANI

DRAWN A. FRANQUI

REVIEWED

ERECTION PLAN E2

19-B-1108.2

SKILLING, HELLE, CHRISTIANSEN, ROBERTSON — Structural & Civil Engineers

PROJECT: THE WORLD TRADE CENTER | TITLE: TOWER B-PH-SHAFT 50 EXTENSION | DATE: 1-10-72

REVISIONS

R

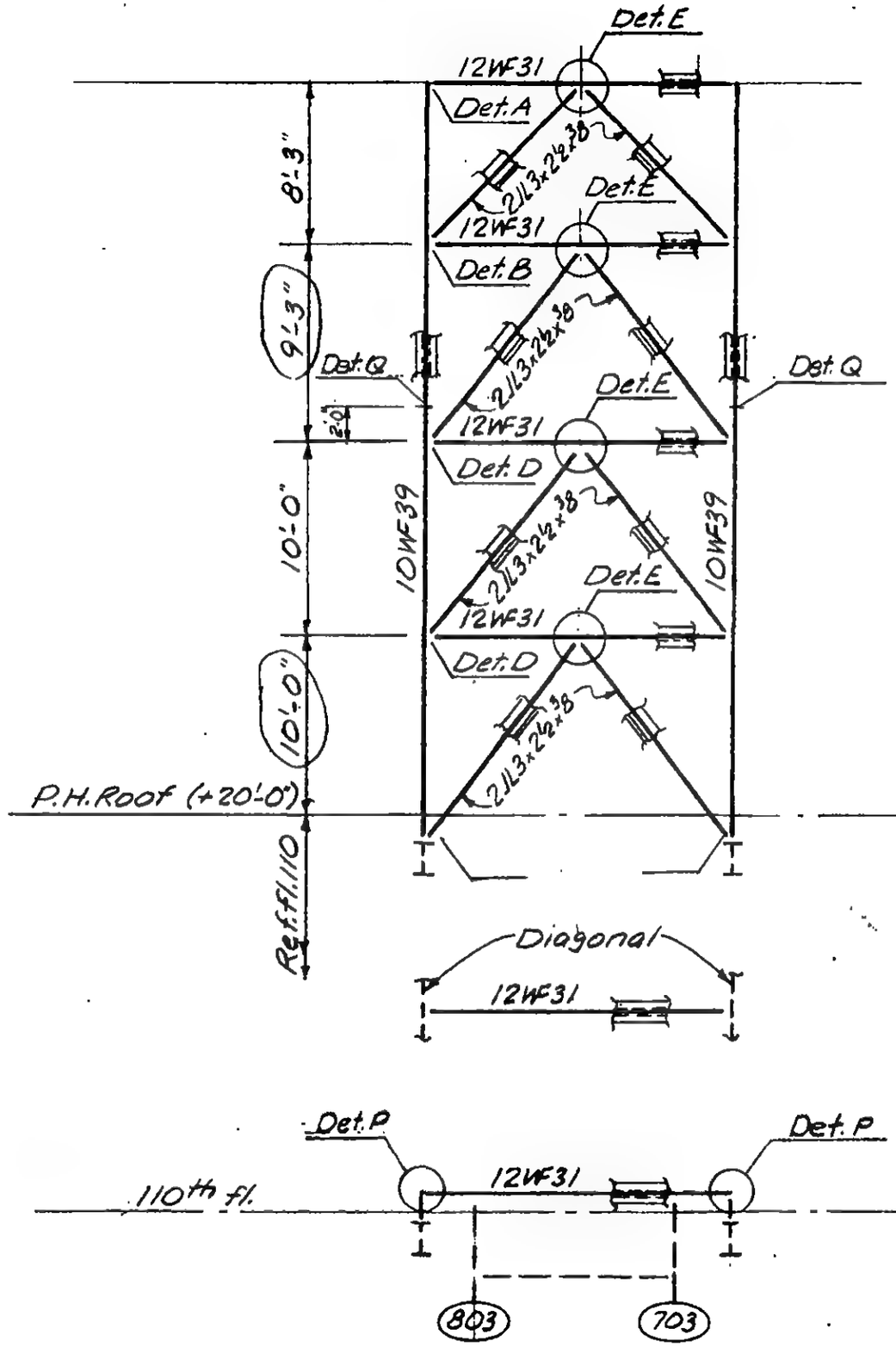

Section A-A

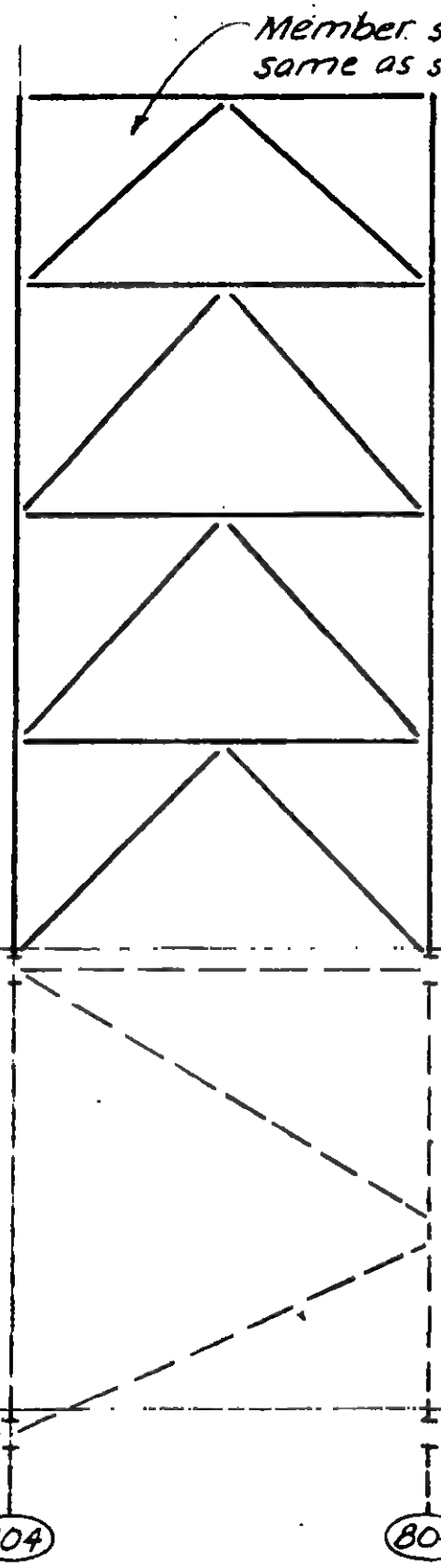

Section B-B

LICENSED PROFESSIONAL ENGINEER
LESLIE E. ROBERTSON
No. 34360
UNIVERSITY OF THE STATE OF NEW YORK

DESIGNED M.RAHMANI

DRAWN A.FRANQUI

REVIEWED

19-B-1108.2

SKILLING, HELLE, CHRISTIANSEN, ROBERTSON . Structural & Civil Engineers

PROJECT THE WORLD TRADE CENTER | TITLE TOWER B-PH-SHAFT 50 EXTENSION | DATE 1-10-72.

REVISIONS

R

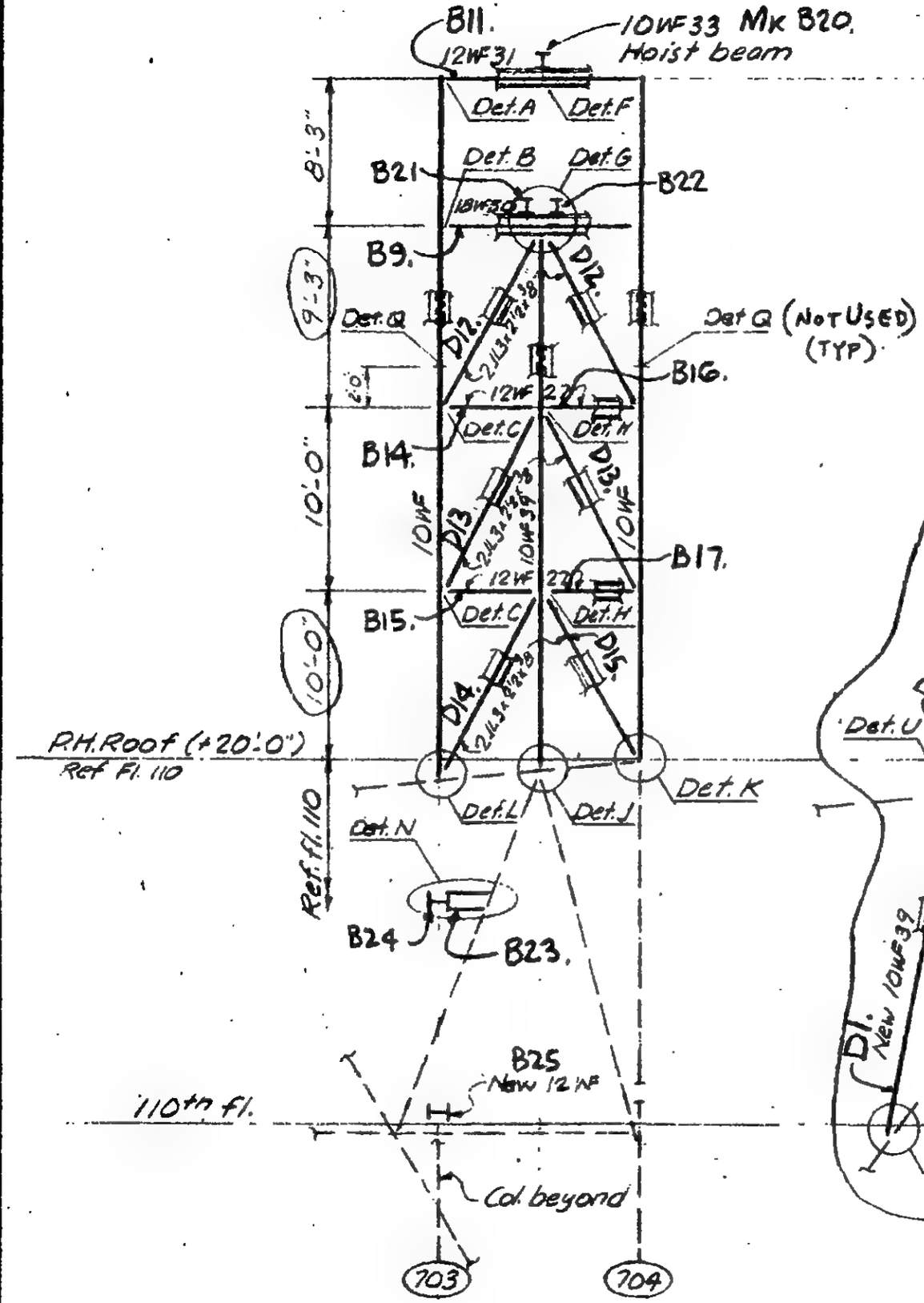

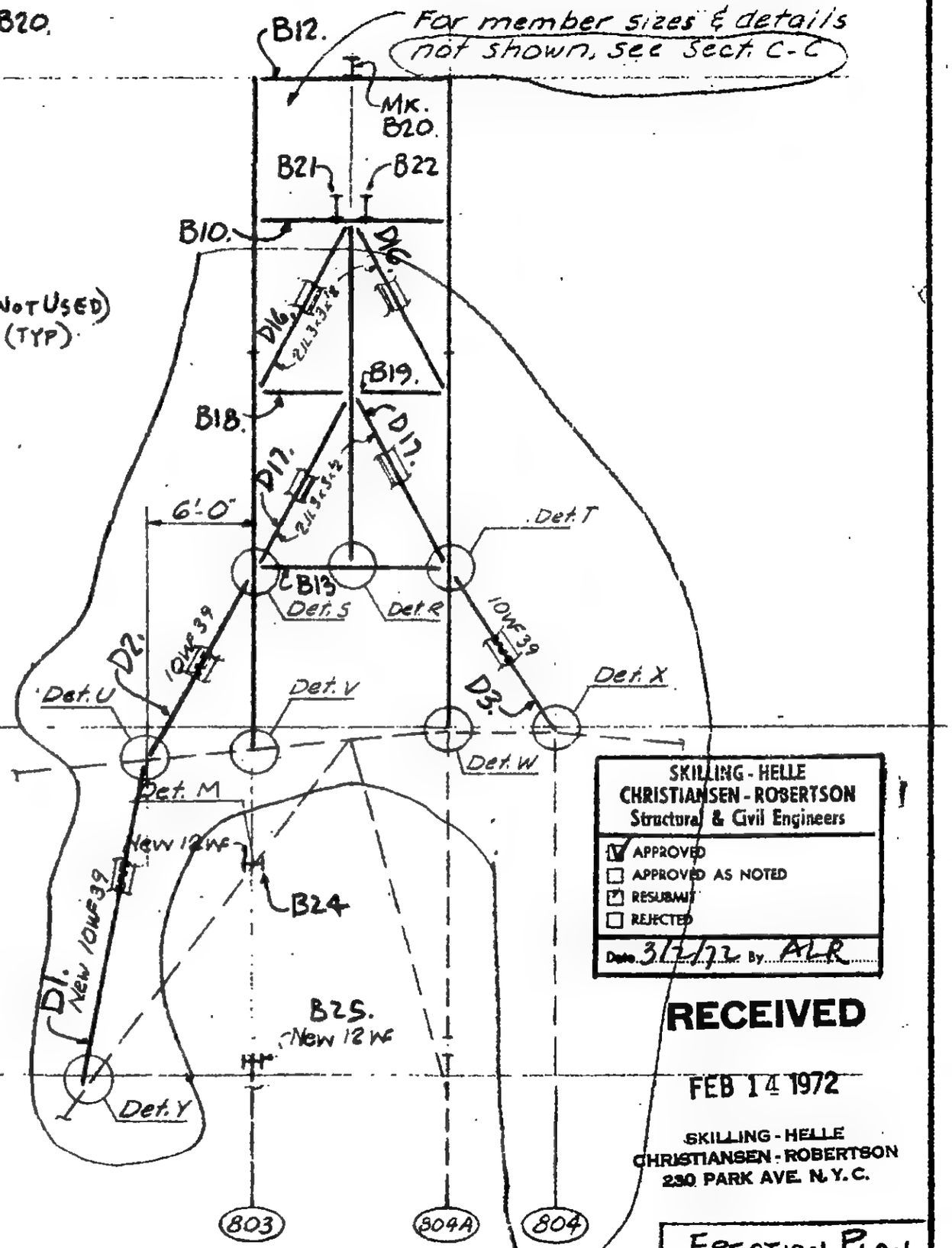

SKILLING - HELLE CHRISTIANSEN - ROBERTSON
Structural & Civil Engineers

- [x] APPROVED
- [ ] APPROVED AS NOTED
- [x] RESUBMIT
- [ ] REJECTED

Date 3/7/72 By ALR

RECEIVED

FEB 14 1972

SKILLING - HELLE CHRISTIANSEN - ROBERTSON 230 PARK AVE. N.Y.C.

LICENSED PROFESSIONAL ENGINEER LESLIE E. ROBERTSON No 34360 UNIVERSITY OF THE STATE OF NEW YORK

DESIGNED M. RAMANI

DRAWN A. FRANQUI

CHECKED

ERECTION PLAN E3

19-B-1108.3

SKILLING, HELLE, CHRISTIANSEN, ROBERTSON — Structural & Civil Engineers

PROJECT: THE WORLD TRADE CENTER | TITLE: TOWER 8-PH-SHAFT 50 EXTENSION | DATE: 1-10-72

REVISIONS

R

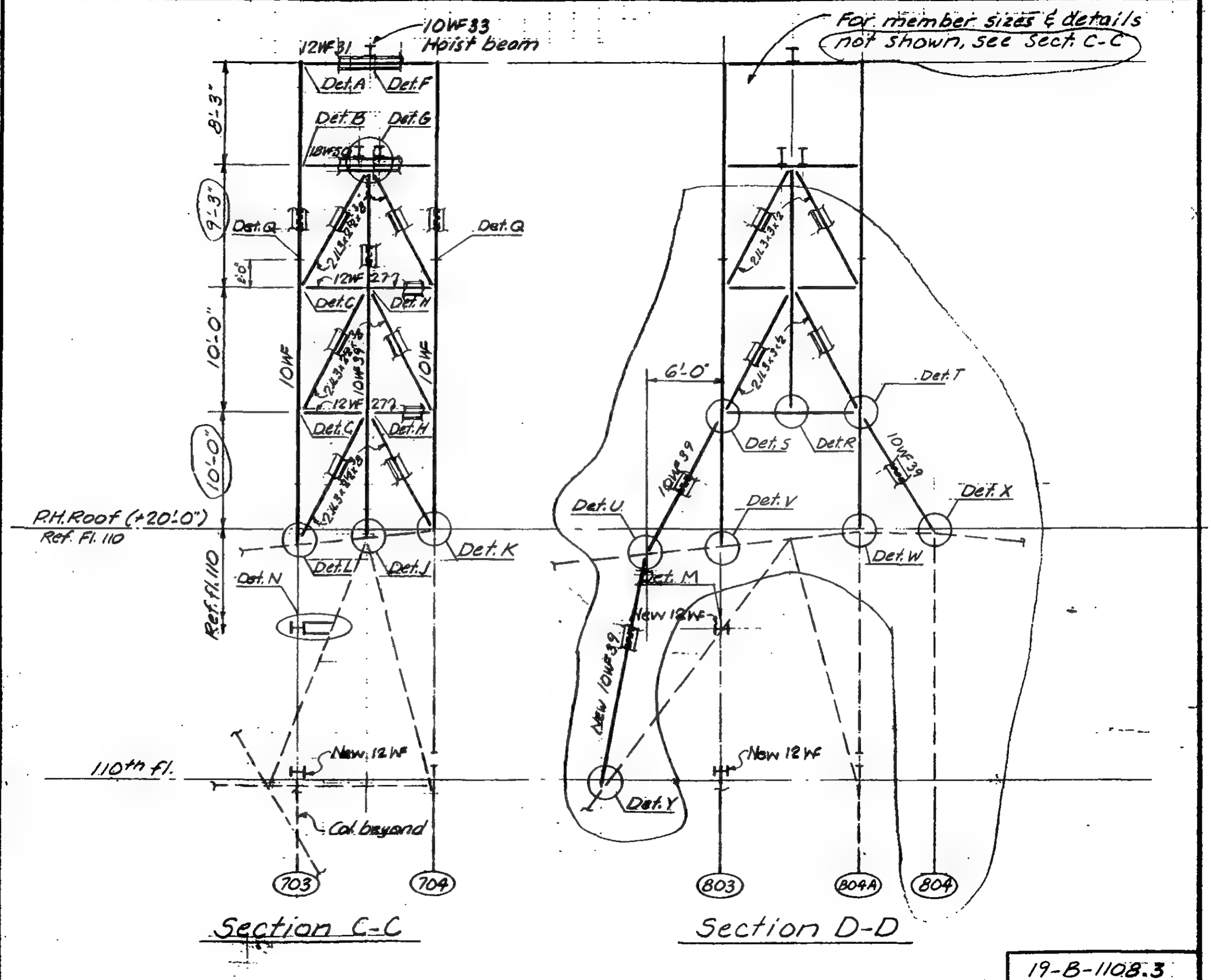

LICENSED PROFESSIONAL ENGINEER — LESLIE E. ROBERTSON — No. 34360 — UNIVERSITY OF THE STATE OF NEW YORK

DESIGNED: M. RAMANI

DRAWN: A. FRANQUI

REVIEWED

19-B-1108.3

SKILLING, HELLE, CHRISTIANSEN, ROBERTSON — Structural & Civil Engineers

PROJECT: THE WORLD TRADE CENTER | TITLE: TOWER B-P.H-SHAFT 50 EXTENSION | DATE: 1-10-72

REVISIONS

R

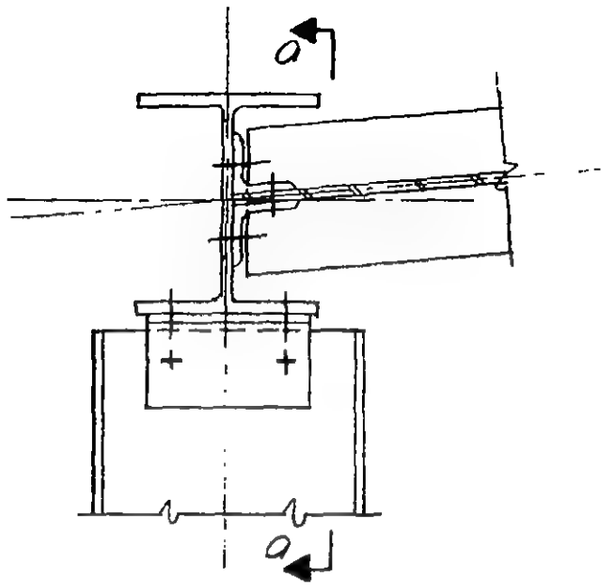

Detail A

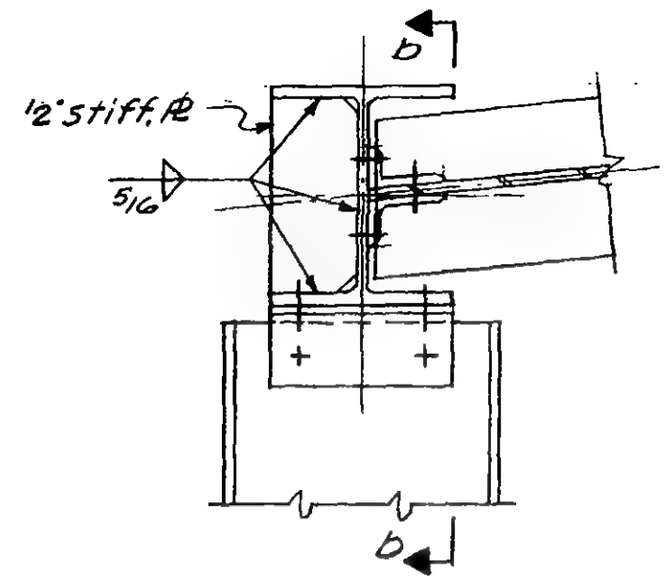

Detail B

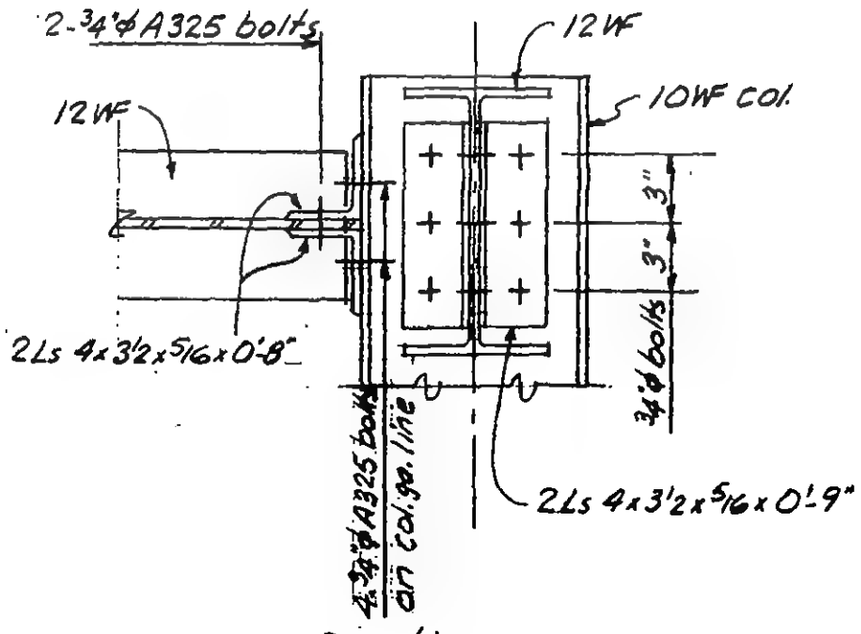

Section a-a

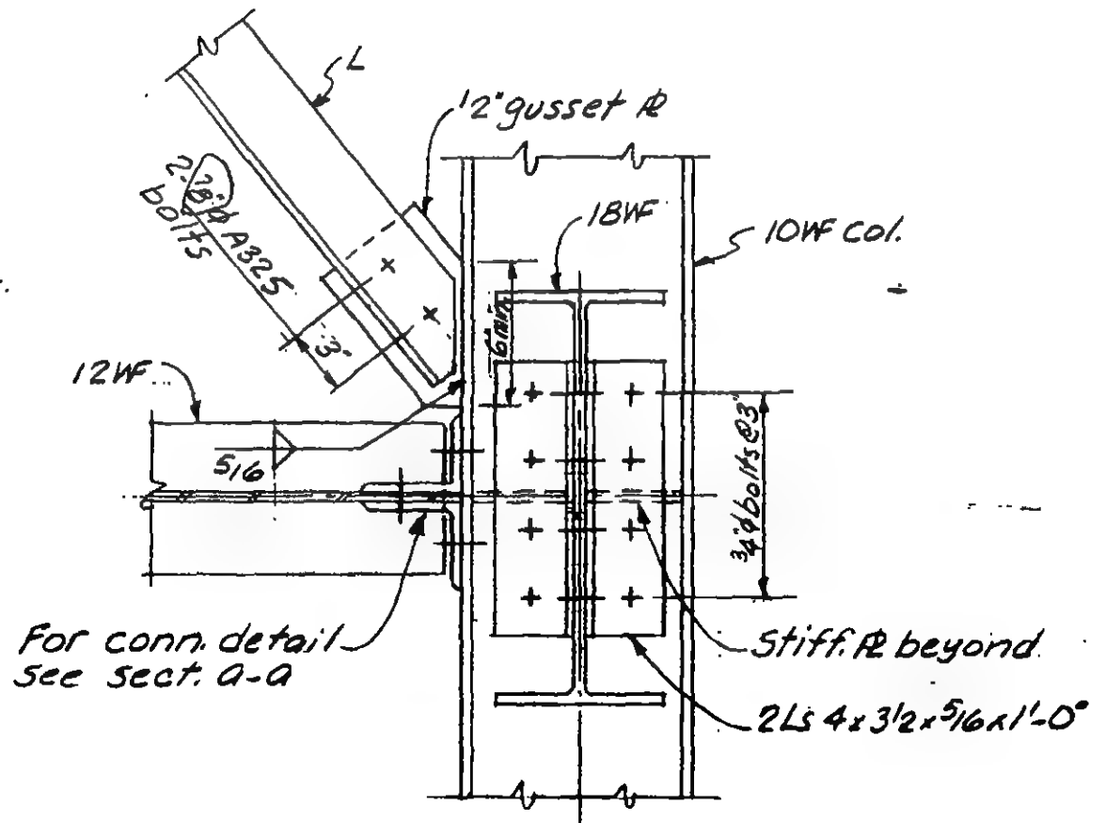

Section b-b

LICENSED PROFESSIONAL ENGINEER — LESLIE E. ROBERTSON — No. 34360 — UNIVERSITY OF THE STATE OF NEW YORK

DESIGNED M. RAMANI

DRAWN A. FRANQUI

REVIEWED

19-B-1108.4

SKILLING, HELLE, CHRISTIANSEN, ROBERTSON — Structural & Civil Engineers

PROJECT: THE WORLD TRADE CENTER | TITLE: TOWER B-PH-SHAFT 50 EXTENSION | DATE: 7-10-72

REVISIONS

R

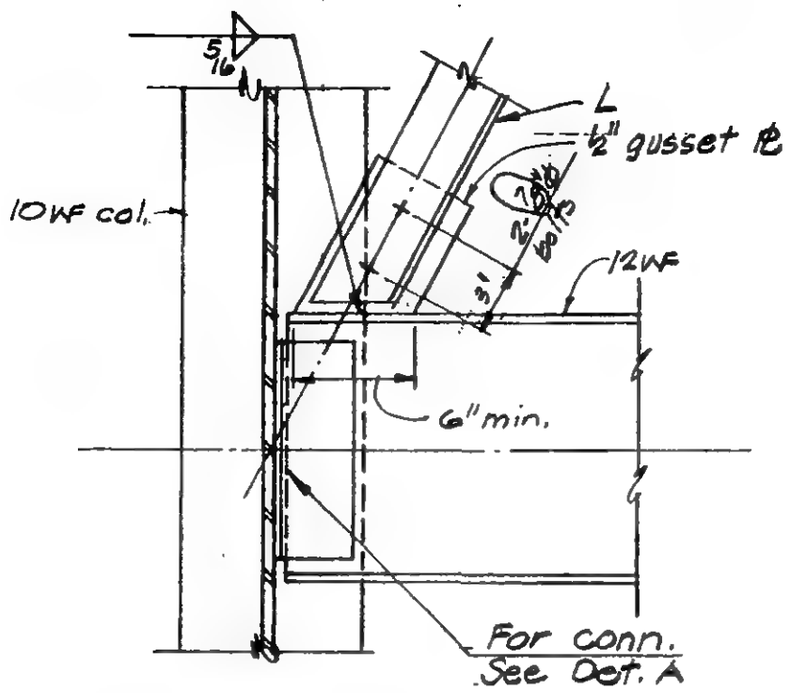

Detail C

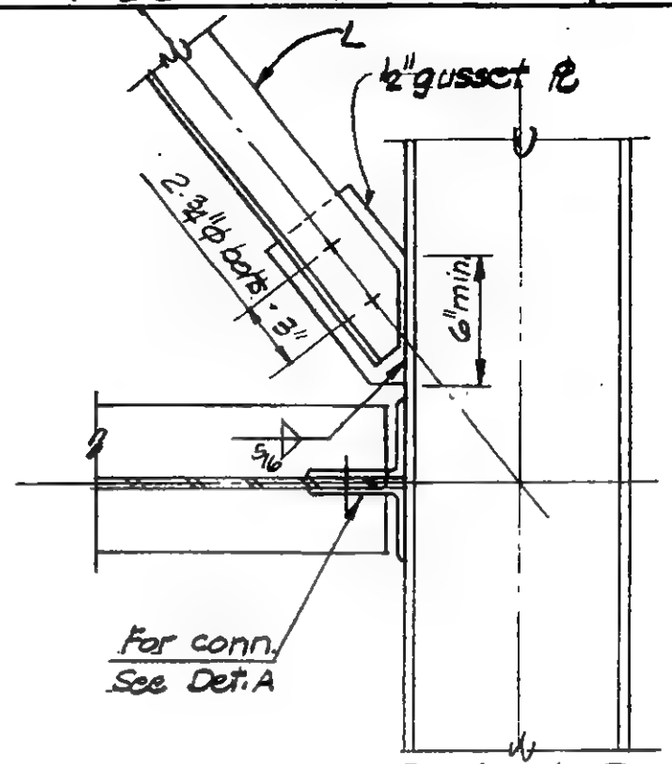

Detail D

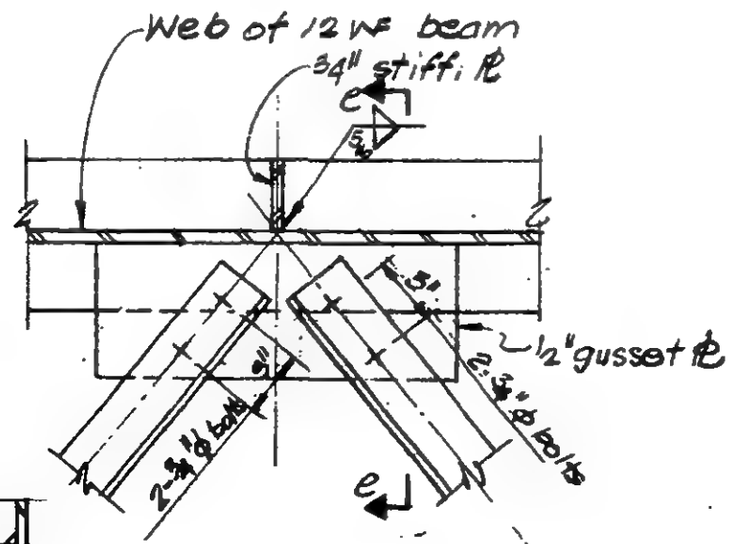

Detail E

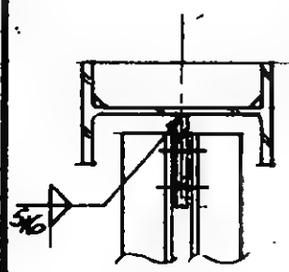

Section e-e

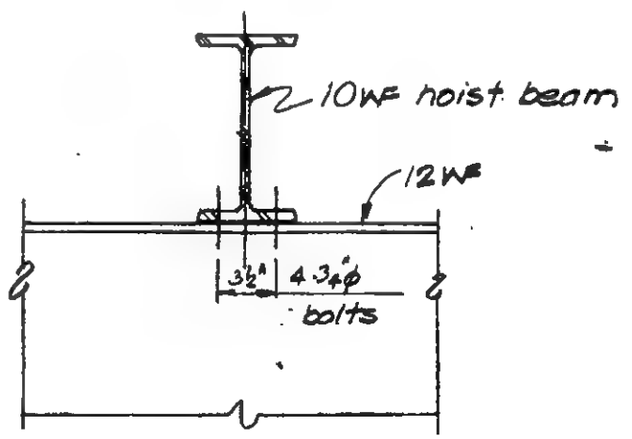

Detail F

LICENSED PROFESSIONAL ENGINEER — LESLIE E. ROBERTSON — No. 34360 — UNIVERSITY OF THE STATE OF NEW YORK

DESIGNED: M. Ramani

DRAWN: P.M. Ozeki

REVIEWED:

19-B-1108.B

SKILLING, HELLE, CHRISTIANSEN, ROBERTSON — Structural & Civil Engineers

PROJECT: THE WORLD TRADE CENTER | TITLE: TOWER B-P.H.- SHAFT 50 EXTENSION | DATE: 1-10-72

REVISIONS

R

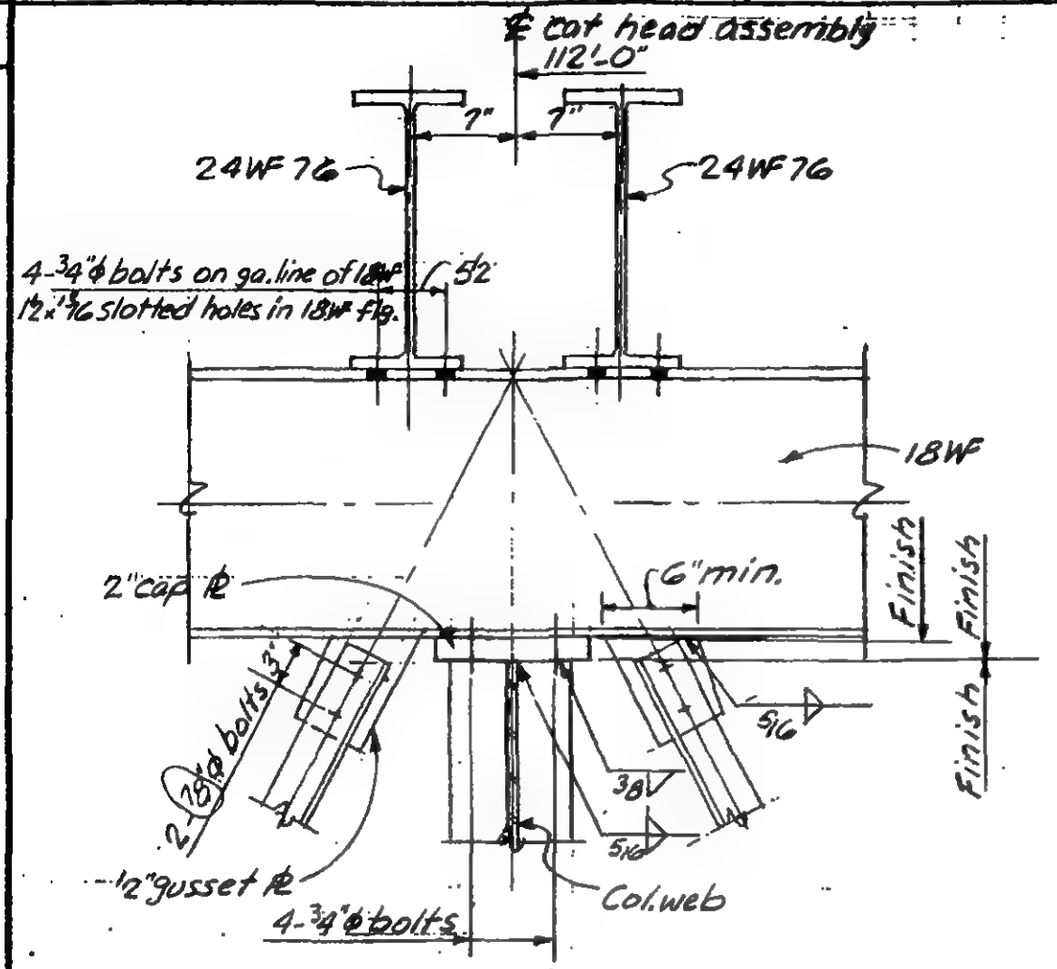

Detail G

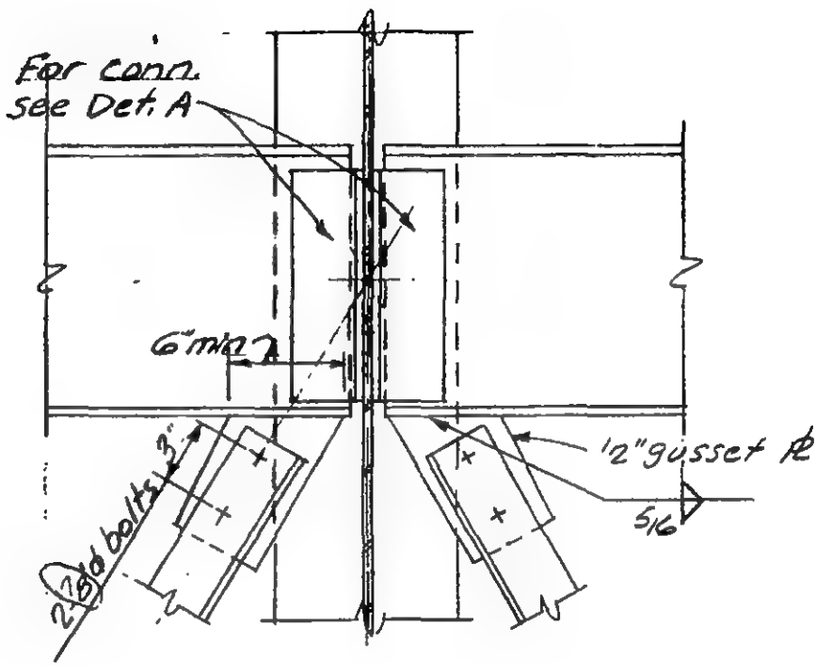

Detail H

LICENSED PROFESSIONAL ENGINEER
LESLIE E. ROBERTSON
No. 34980
UNIVERSITY OF THE STATE OF NEW YORK

DESIGNED M.RAMANI

DRAWN A. FRANQUI

REVIEWED

19-B-1108.6

SKILLING, HELLE, CHRISTIANSEN, ROBERTSON [redacted] gineers

PROJECT THE WORLD TRADE CENTER | TITLE TOWER [redacted] EXTENSION | DATE 1-10-72

EVISIONS

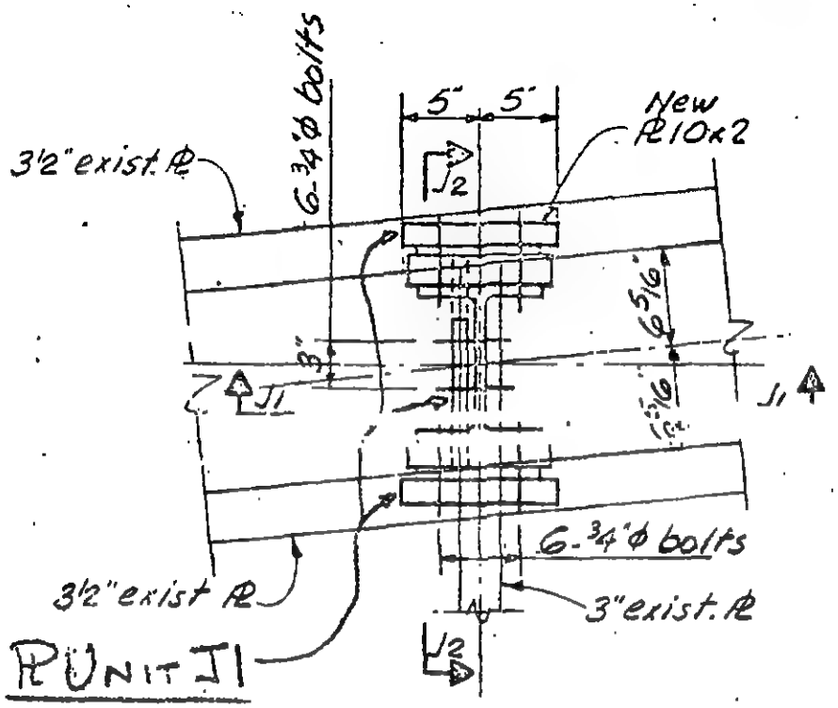

Detail J

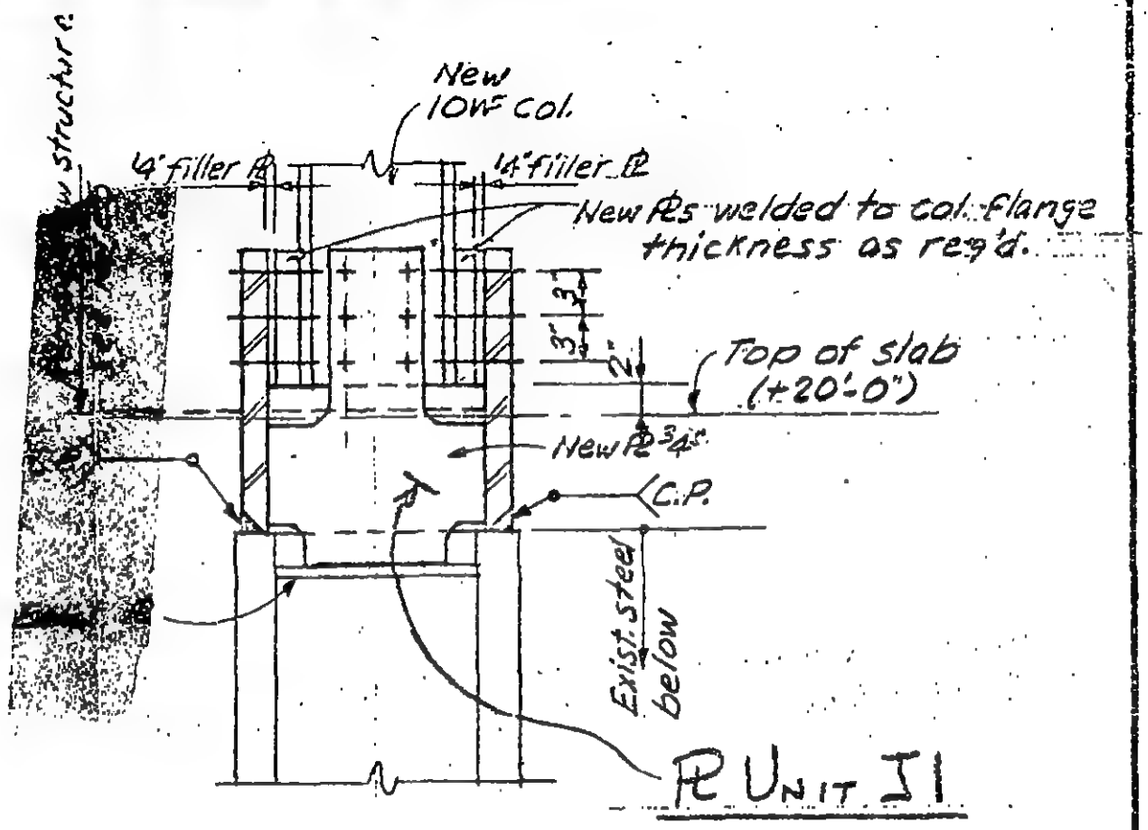

Section J2-J2

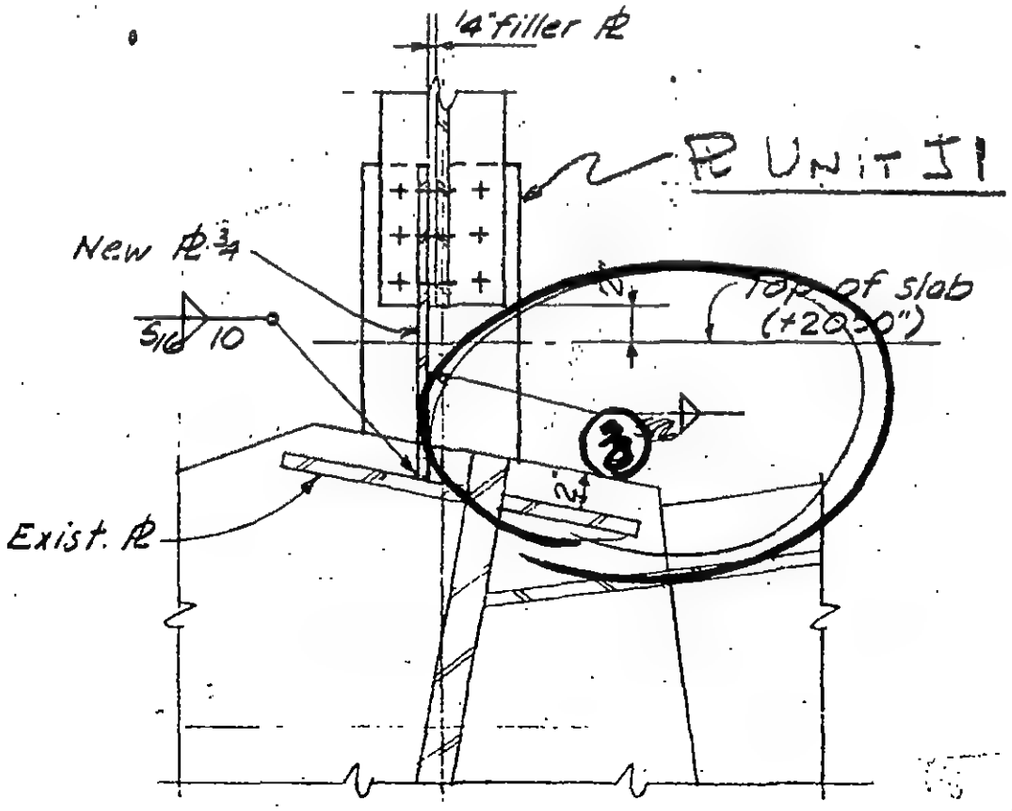

Section J1-J1

SKILLING - HELLE
CHRISTIANSEN - ROBERTSON
Structural & Civil Engineers

- ☐ APPROVED
- ☑ APPROVED AS NOTED
- ☑ RESUBMIT
- ☐ REJECTED

Date 3/6/72 By ALR

LICENSED PROFESSIONAL ENGINEER
LESLIE E. ROBERTSON
No 34960
THE STATE OF NEW YORK

DESIGNED M.RAMANI

19B.1100.7

ERECTION PLAN
E4

SKILLING, HELLE, CHRISTIANSEN, ROBERTSON — Structural & Civil Engineers

PROJECT: THE WORLD TRADE CENTER | TITLE: TOWER B-P.H.-SHAFT 50 EXTENSION | DATE: 1-10-72

REVISIONS

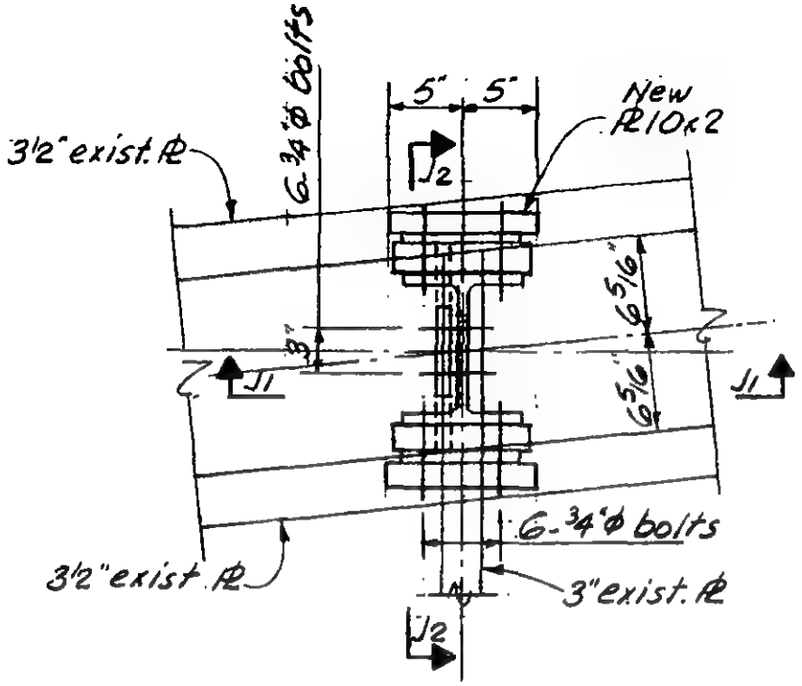

Detail J

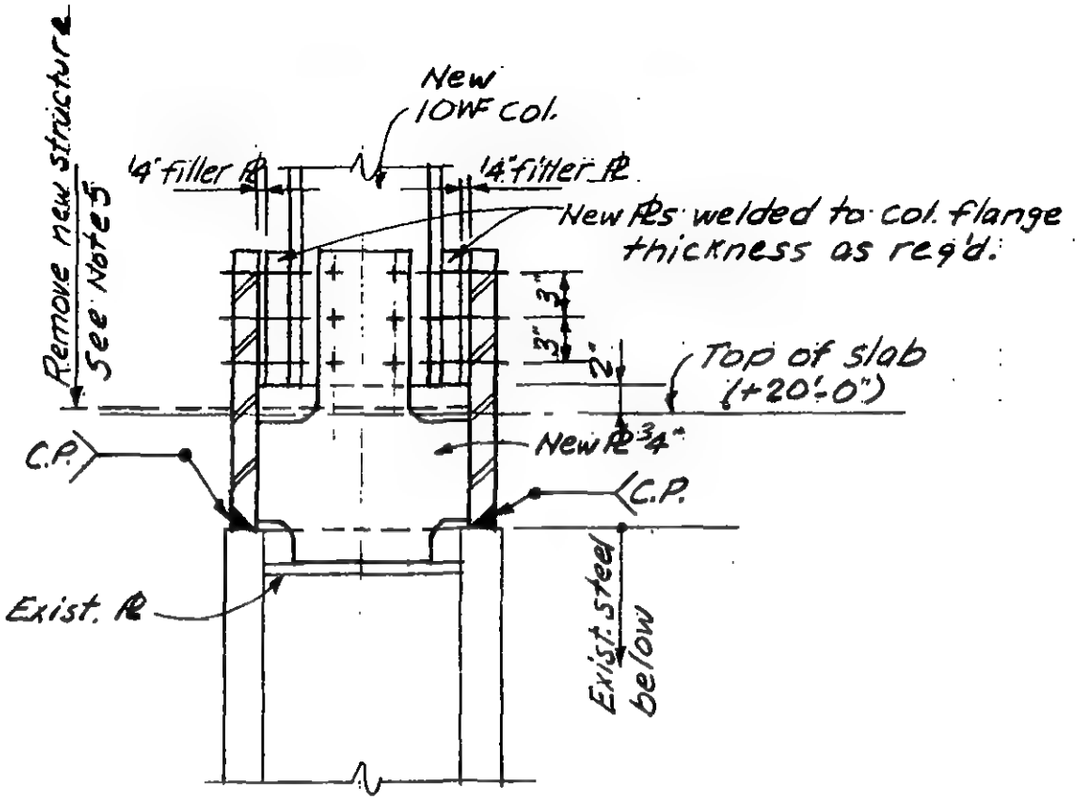

Section J2-J2

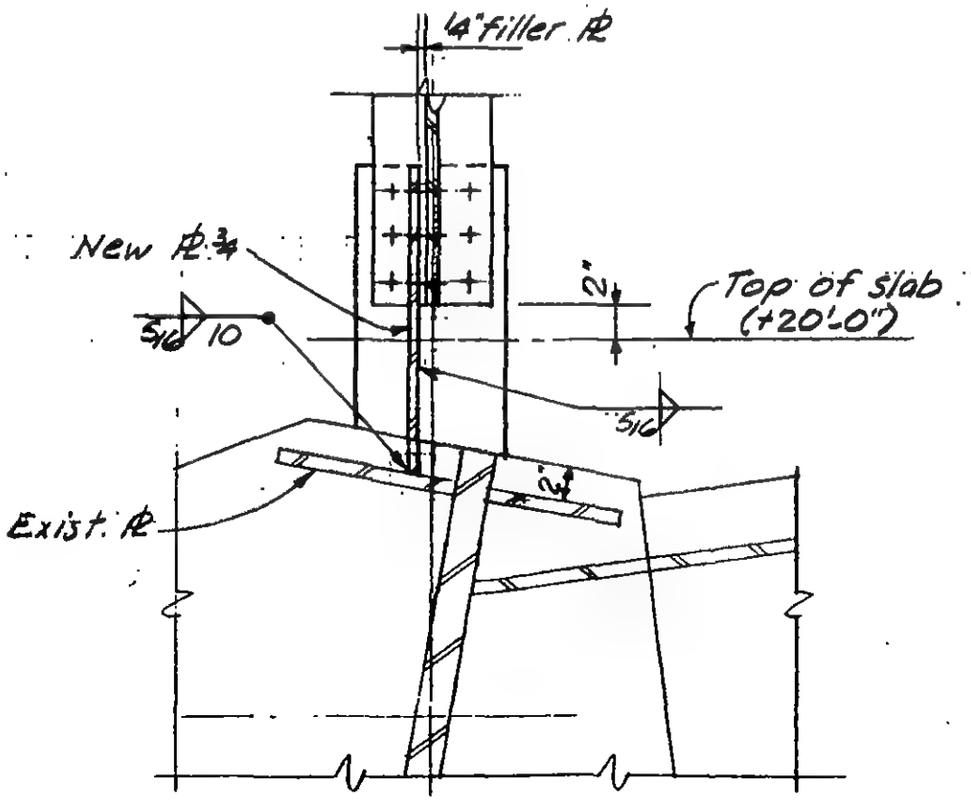

Section J1-J1

LICENSED PROFESSIONAL ENGINEER — LESLIE E. ROBERTSON — No. 24360 — UNIVERSITY OF THE STATE OF NEW YORK

DESIGNED: M.RAMANI

DRAWN: A.FRANQUI

REVIEWED

19-B-1108.7

SKILLING, HELLE, CHRISTIANSEN, ROBERTSON [redacted] ...gineers

PROJECT THE WORLD TRADE CENTER | TITLE TOWER [redacted] ...OS EXTENSION | DATE 1-10-72

REVISIONS

R

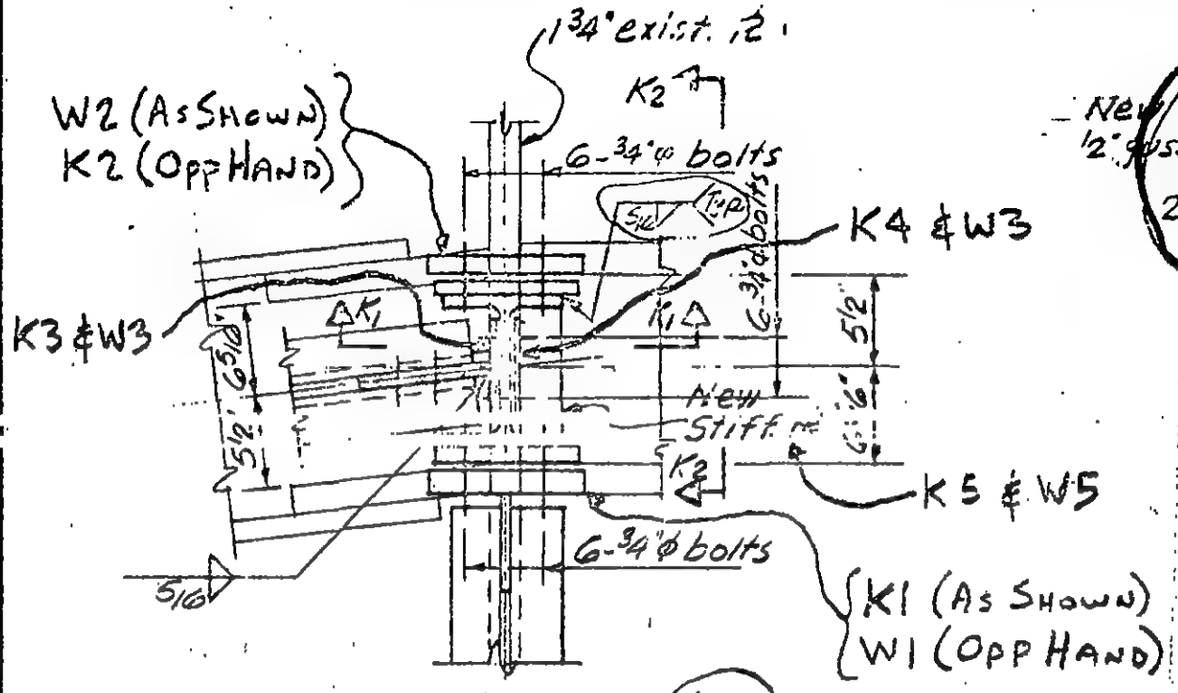

Detail K & W

Detail W opp. hand

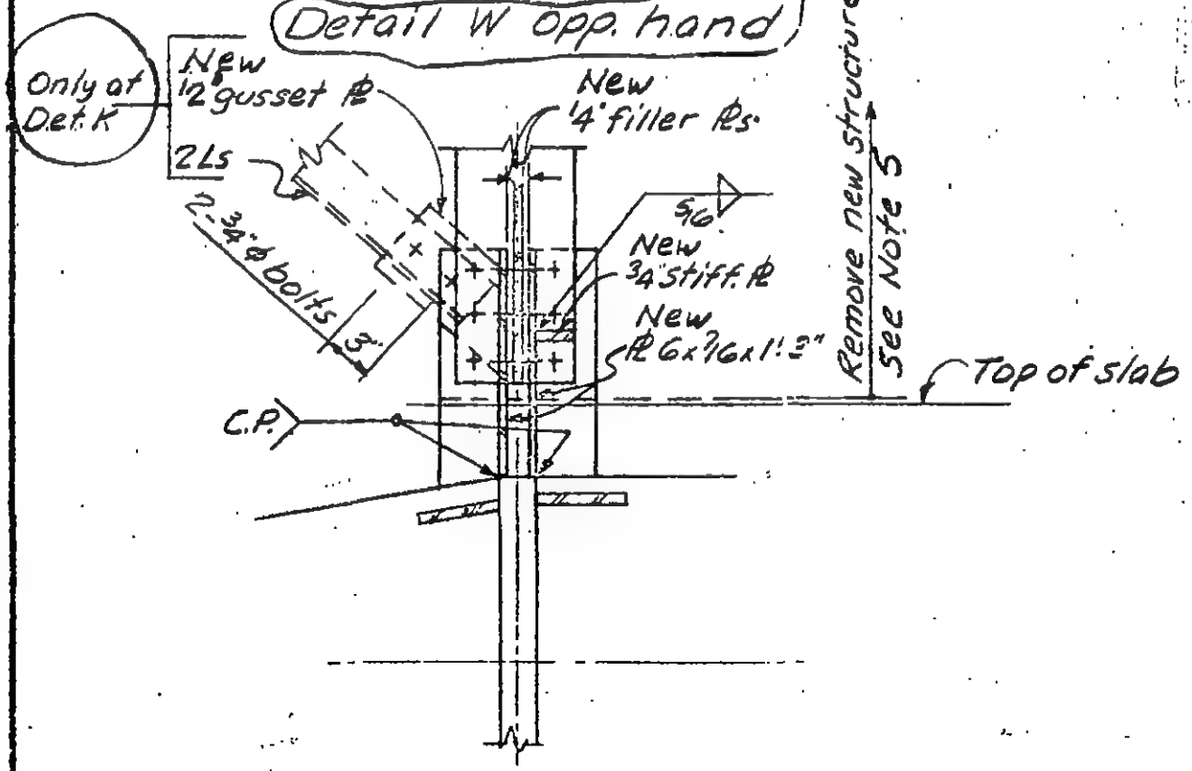

Section K1-K1

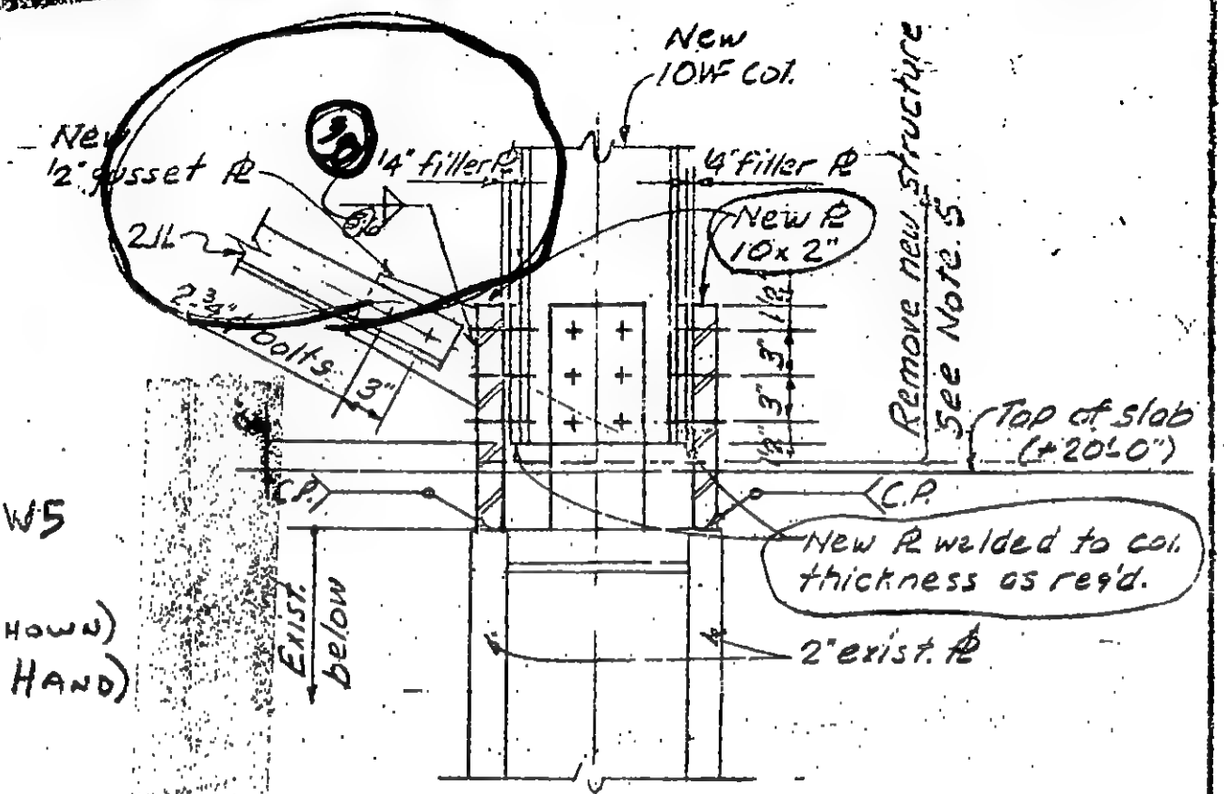

Section K2-K2

SKILLING - HELLE
CHRISTIANSEN - ROBERTSON
Structural & Civil Engineers

☐ APPROVED
☑ APPROVED AS NOTED
☐ RESUBMIT
☐ REJECTED

Date 3/6/72 By ALR

LICENSED PROFESSIONAL ENGINEER
LESLIE E. ROBERTSON
No 34960
OF THE STATE OF NEW YORK

DESIGNED M. RAMANI

DRAWN

19-B-1108.8

ERECTION PLAN

SKILLING, HELLE, CHRISTIANSEN, ROBERTSON — Structural & Civil Engineers

PROJECT: THE WORLD TRADE CENTER | TITLE: TOWER B-R.H.-SHAFT 50 EXTENSION | DATE: 1-10-72

REVISIONS

R

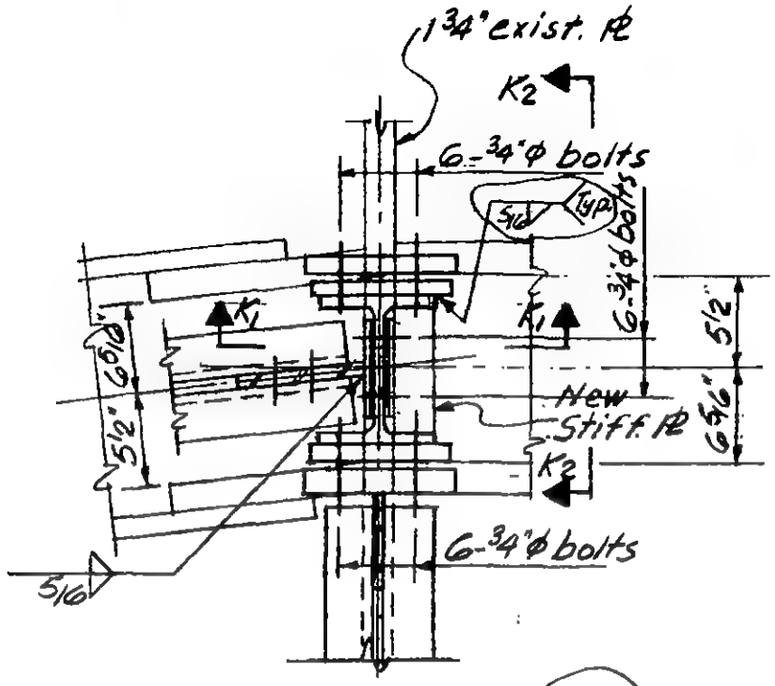

Detail K & W

Detail W opp. hand

Only at Det. K

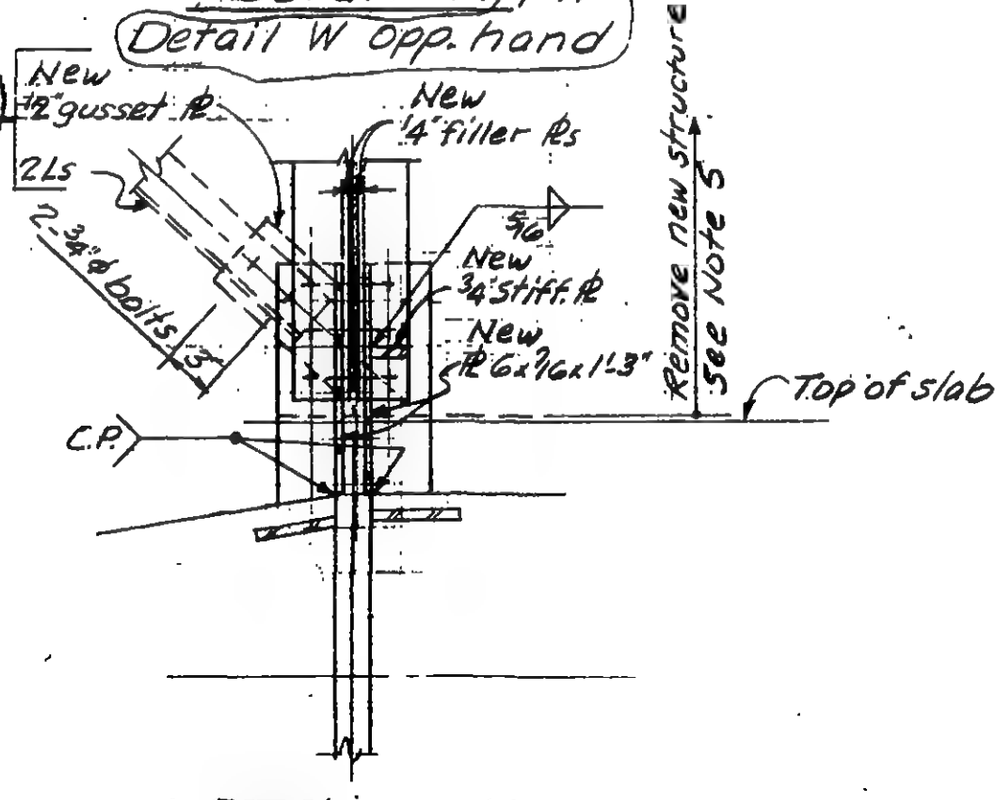

Section K1-K1

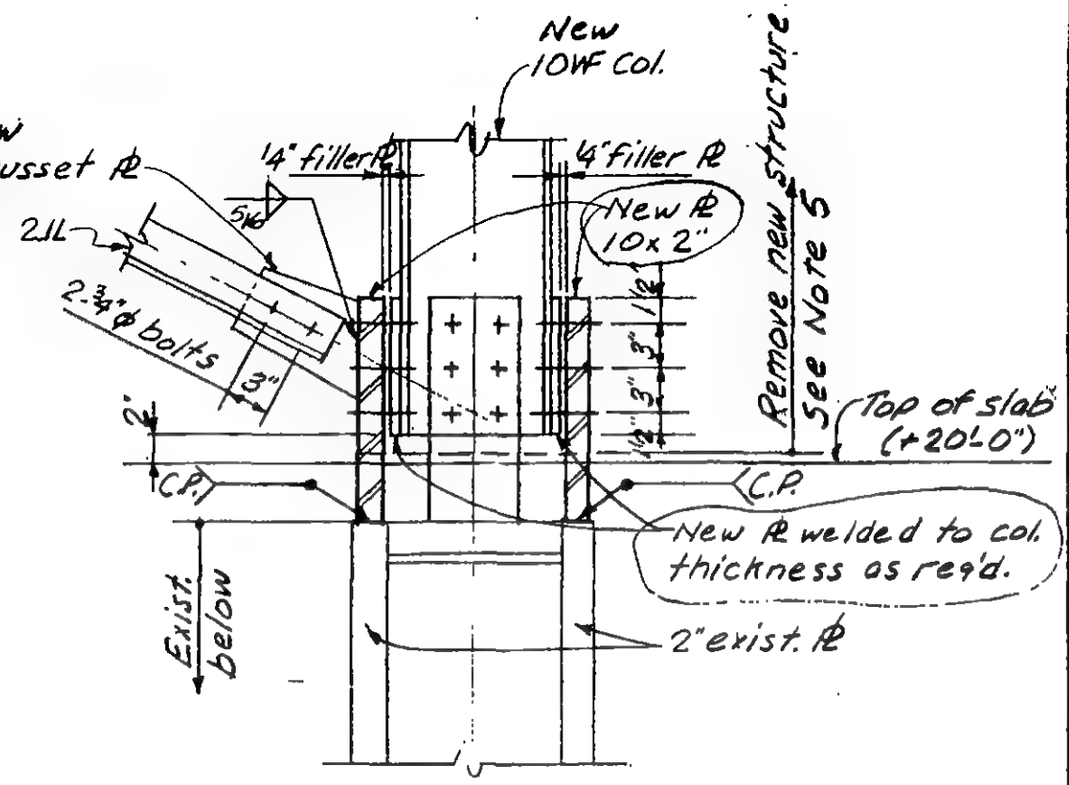

Section K2-K2

LICENSED PROFESSIONAL ENGINEER — LESLIE E. ROBERTSON — No. 34360 — UNIVERSITY OF THE STATE OF NEW YORK

DESIGNED: M.RAMANI

DRAWN: A.ERANQUI

REVIEWED:

19-B-1108.8

SKILLING, HELLE, CHRISTIANSEN, ROBERTSON

PROJECT THE WORLD TRADE CENTER | TITLE TOW[redacted]TENSION | DATE 7-10-72

REVISIONS

R

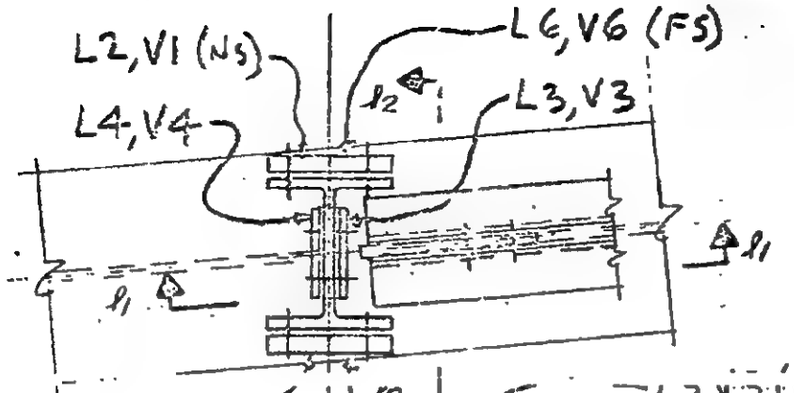

Detail L & V

Detail V opp. hand

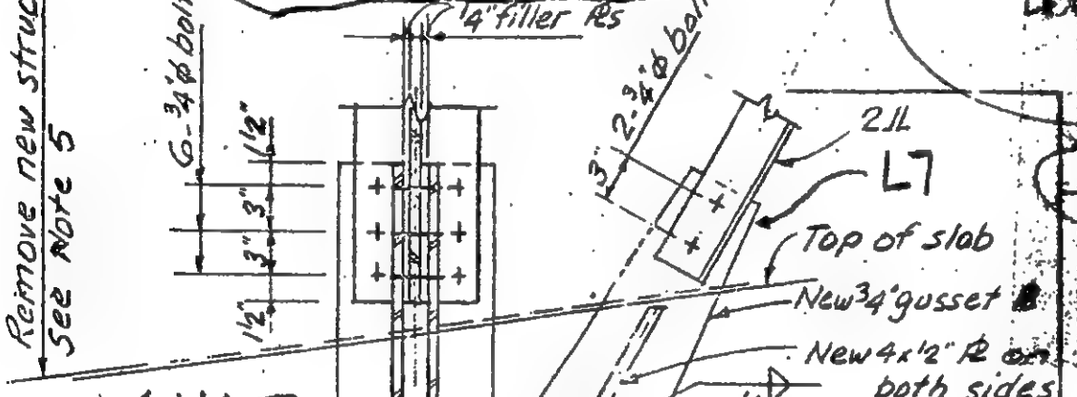

Section l1-l1

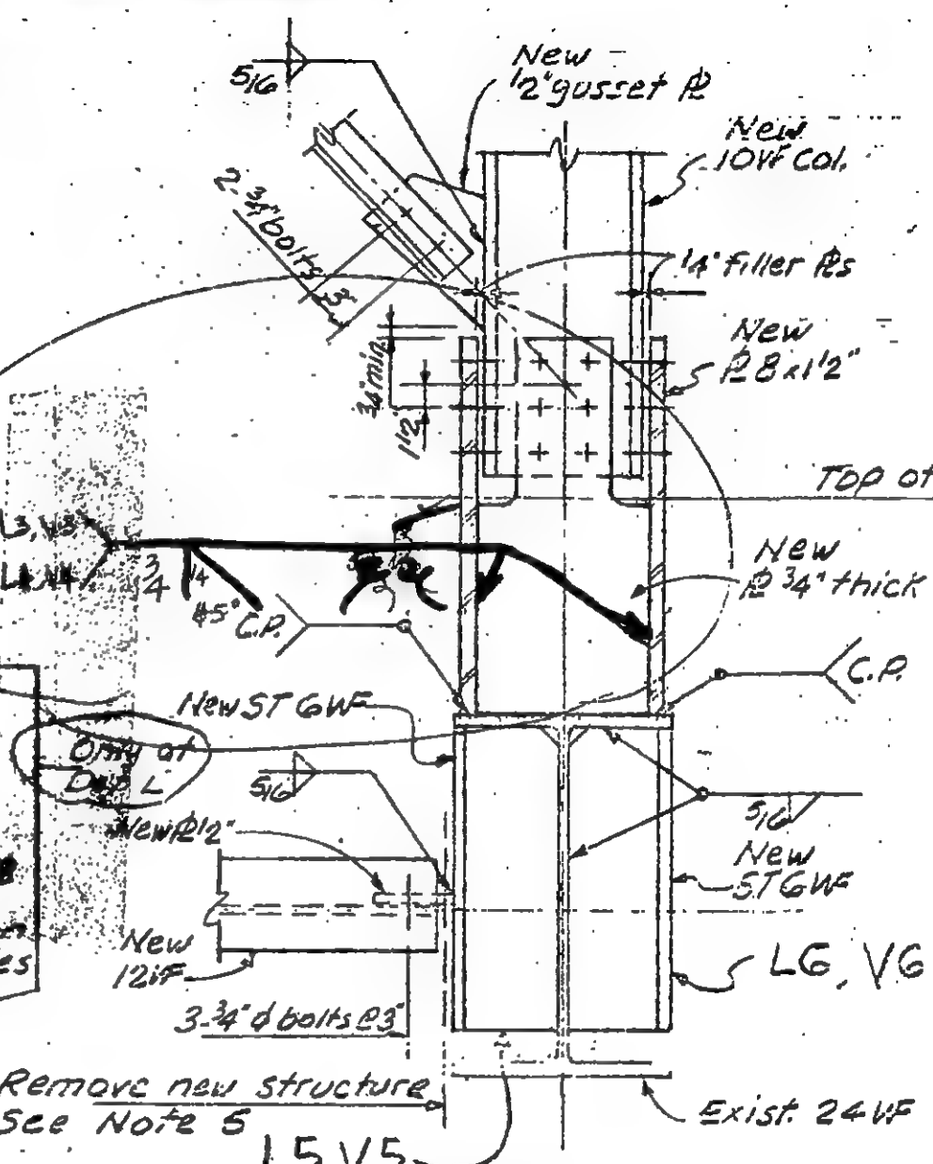

Section l2-l2

L5,V6 (As Shown)
L6,V5 (Opp Hand)

LICENSED PROFESSIONAL ENGINEER
LESLIE E. ROBERTSON
No 34560
OF THE STATE OF NEW YORK

SKILLING-HELLE
CHRISTIANSEN-ROBERTSON
Structural & Civil Engineers

☐ APPROVED
☑ APPROVED AS NOTED
☐ SEE SHEET
☐ REJECTED

Date 3/6/72 By

DESIGNED M. RAMANI

DRAWN A. FRANQUI

19-B-1108.9

ERECTION PLAN EG

SKILLING, HELLE, CHRISTIANSEN, ROBERTSON — Structural & Civil Engineers

PROJECT: THE WORLD TRADE CENTER | TITLE: TOWER B-P.H-SHAFT 50 EXTENSION | DATE: 1-10-72

REVISIONS

R

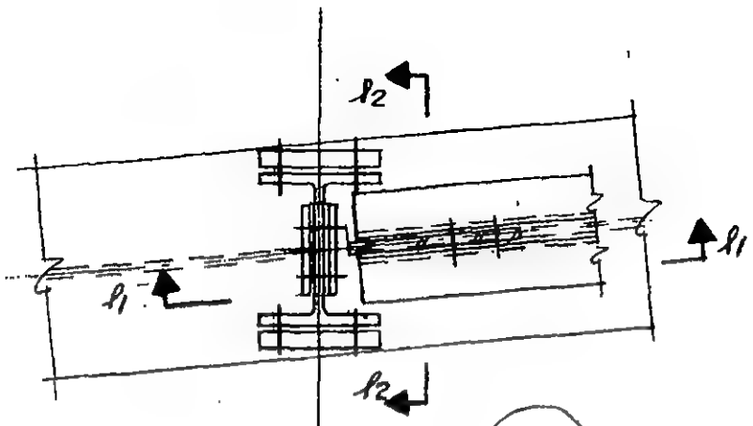

Detail L & V

Detail V opp. hand

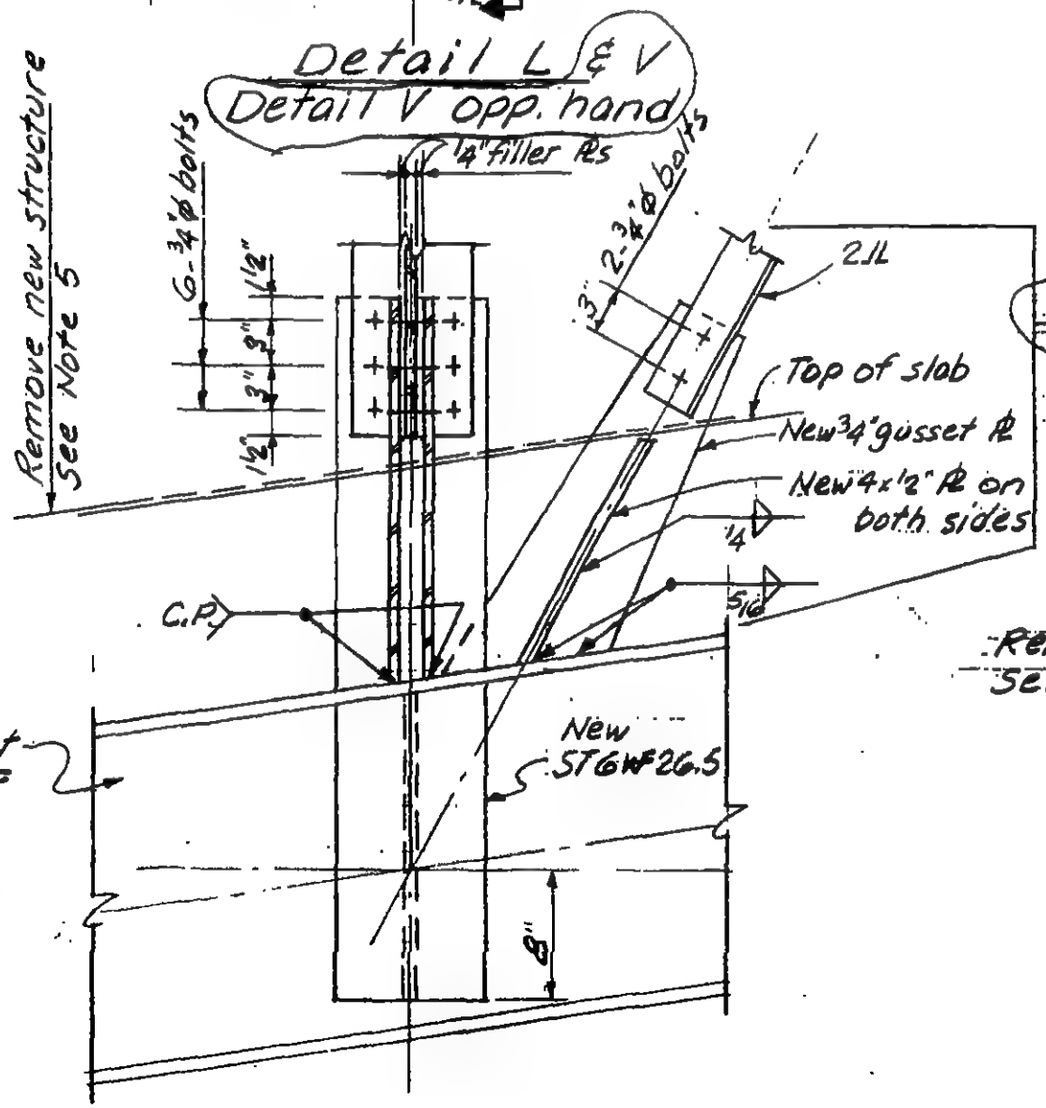

Section l1-l1

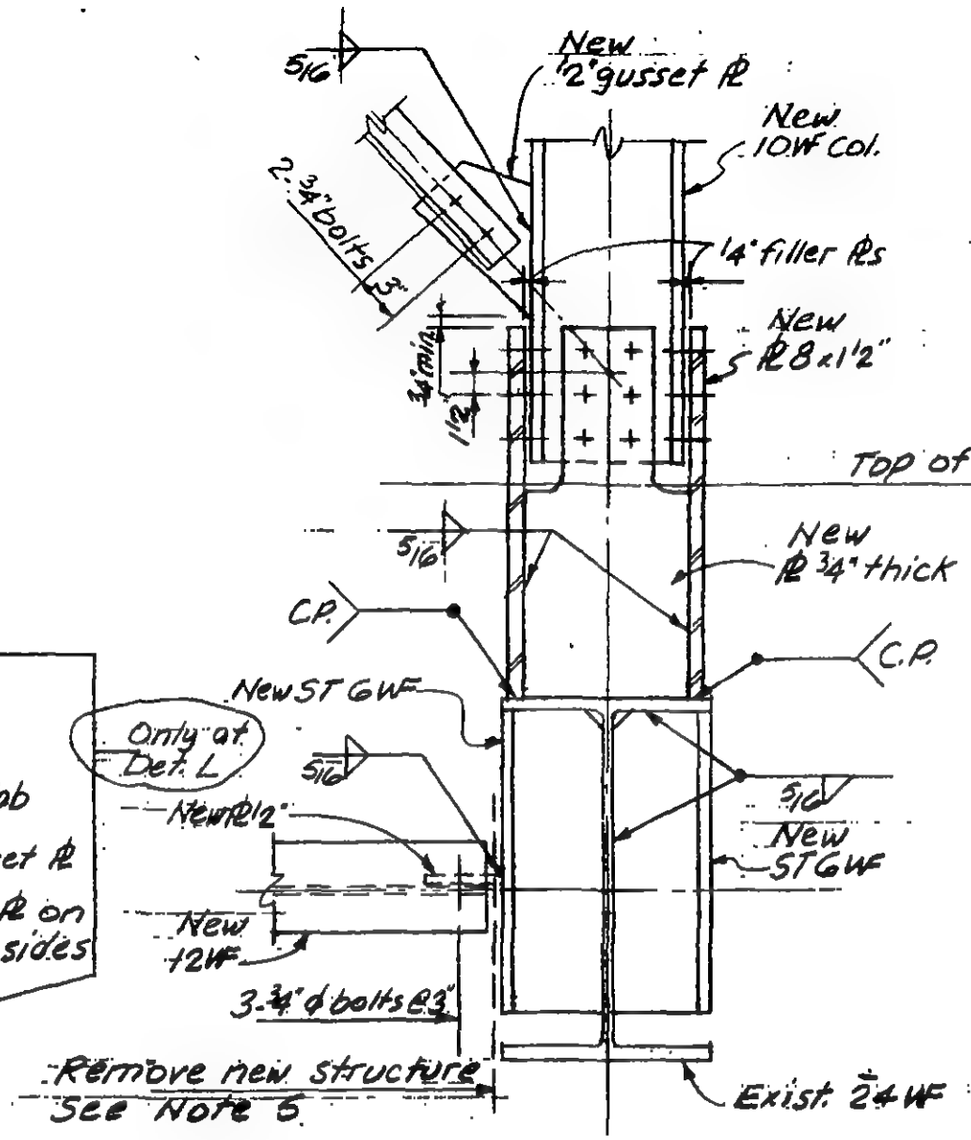

Section l2-l2

LICENSED PROFESSIONAL ENGINEER — LESLIE E. ROBERTSON — No. 34360 — UNIVERSITY OF THE STATE OF NEW YORK

DESIGNED M. RAMANI

DRAWN A. FRANQUI

REVIEWED

19-B-1108.9

SKILLING, HELLE, CHRISTIANSEN, ROBERTSON — Engineers

PROJECT THE WORLD TRADE CENTER | TITLE TOW[redacted] EXTENSION | DATE 1-10-72

REVISIONS

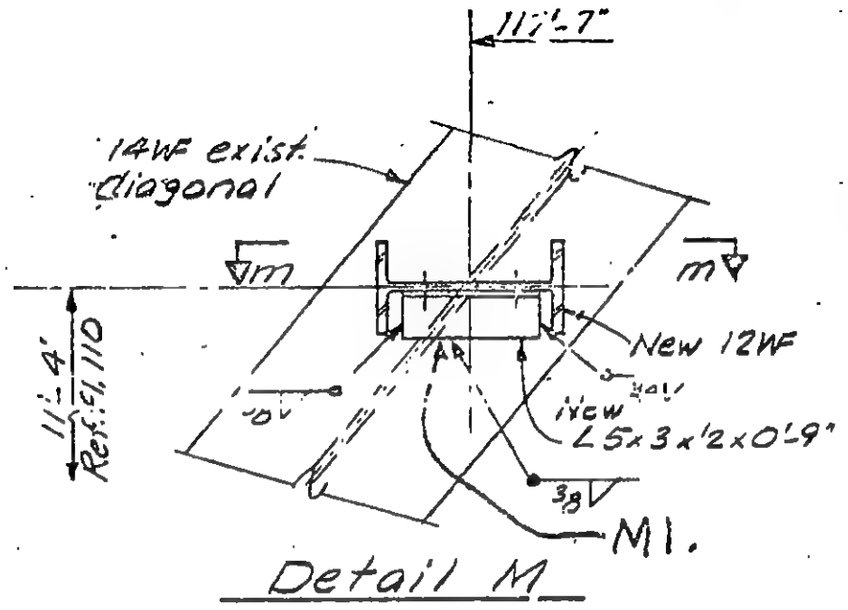

Detail M

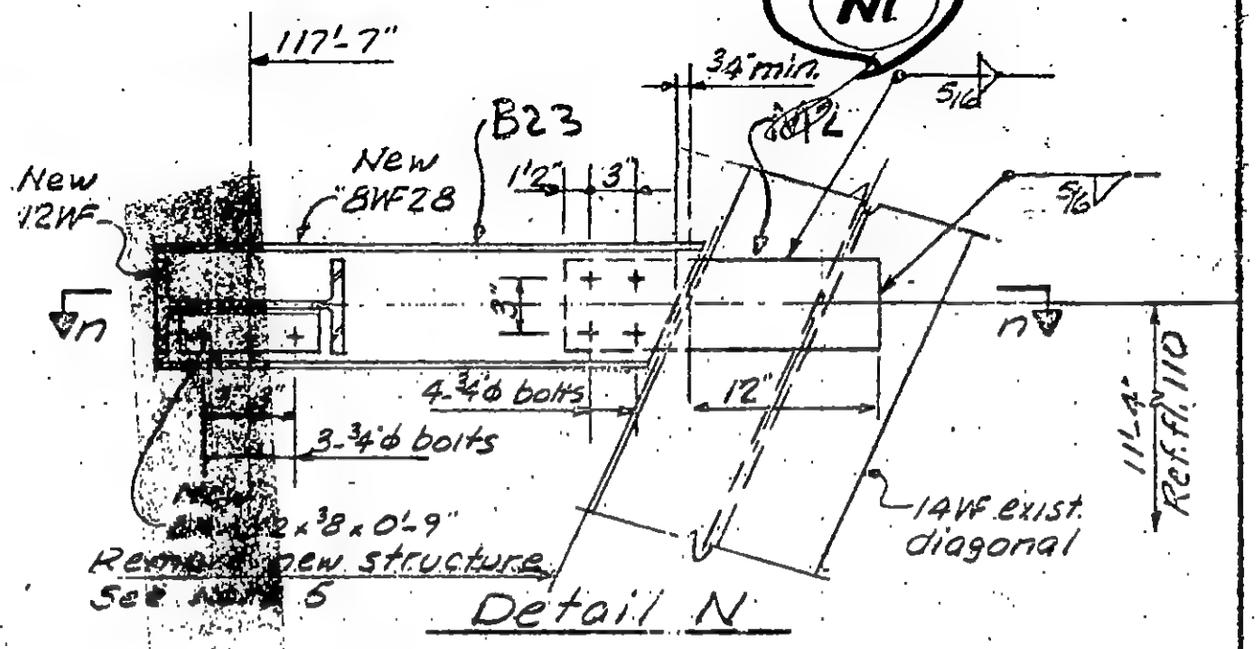

Detail N

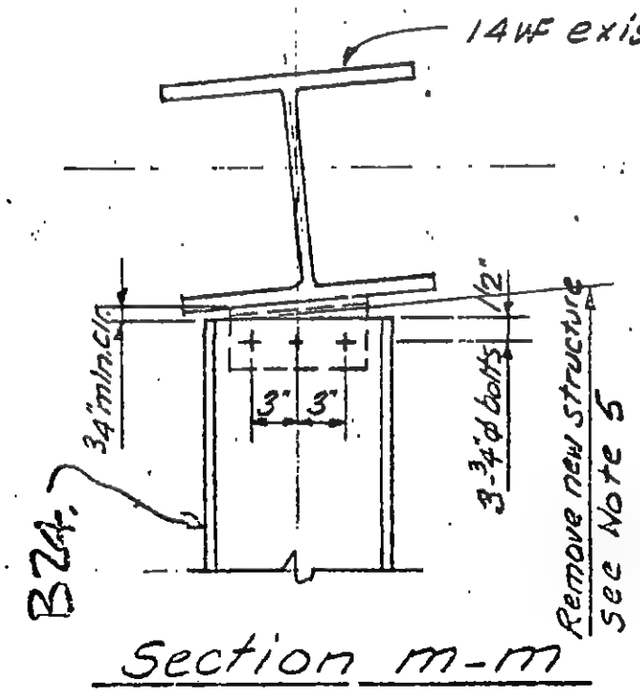

Section m-m

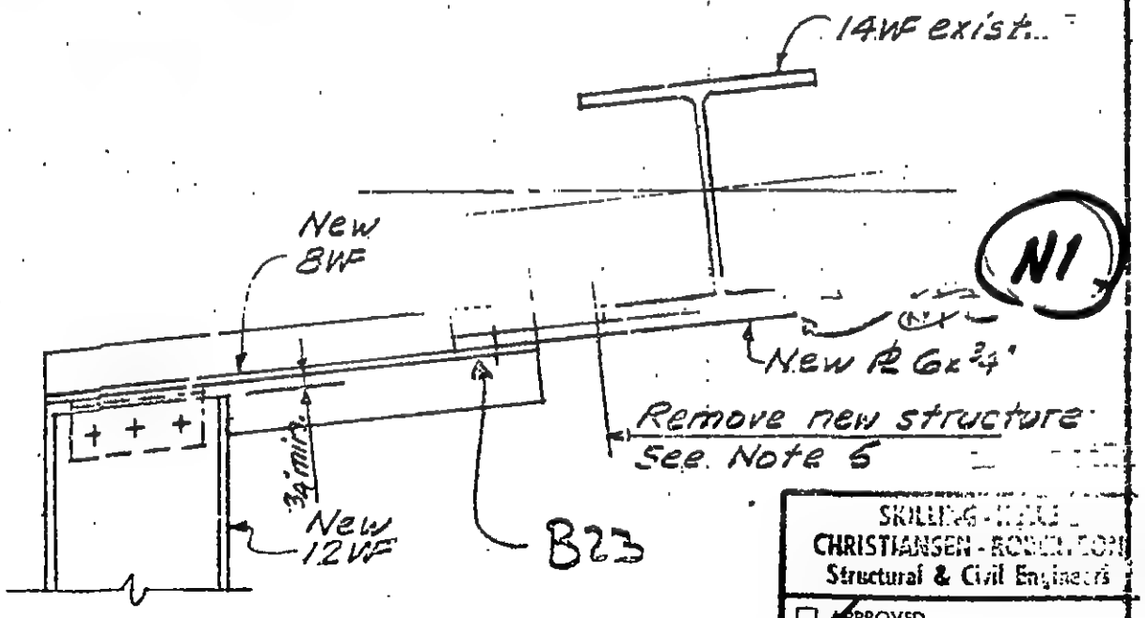

Section n-n

SKILLING - HELLE - CHRISTIANSEN - ROBERTSON
Structural & Civil Engineers

☐ APPROVED
☑ APPROVED AS NOTED
☐ RESUBMIT
☐ REJECTED

Date 3/6/72 By ALR

LICENSED PROFESSIONAL ENGINEER — LESLIE E. ROBERTSON — No 34360 — THE STATE OF NEW YORK

DESIGNED M. RAMANI

DRAWN [illegible]

19-B-1108.10

ERECTION PLAN E7

SKILLING, HELLE, CHRISTIANSEN, ROBERTSON — Structural & Civil Engineers

PROJECT: THE WORLD TRADE CENTER | TITLE: TOWER B-P.H- SHAFT 50 EXTENSION | DATE: 1-10-72

REVISIONS

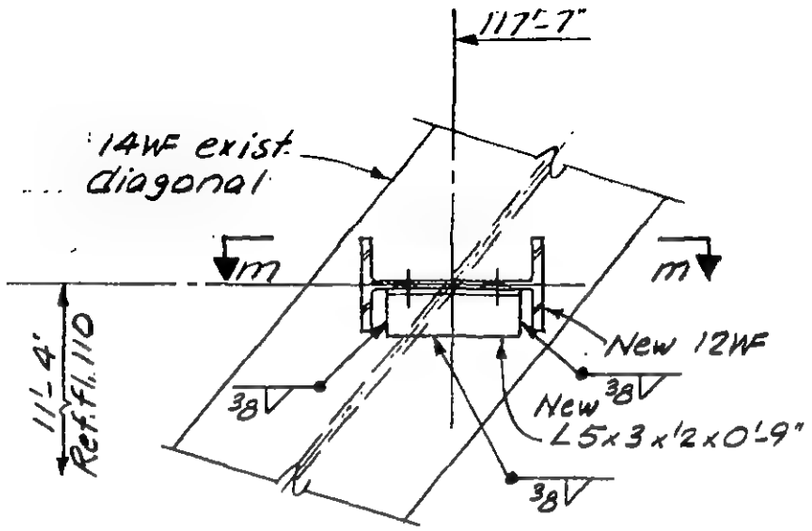

Detail M

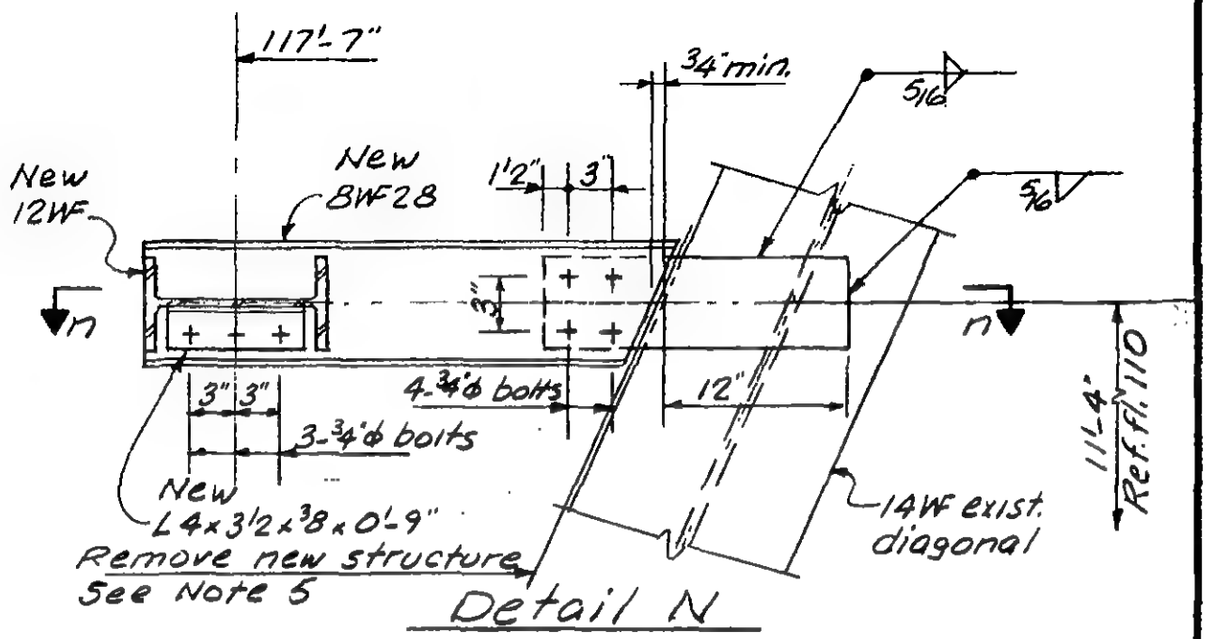

Detail N

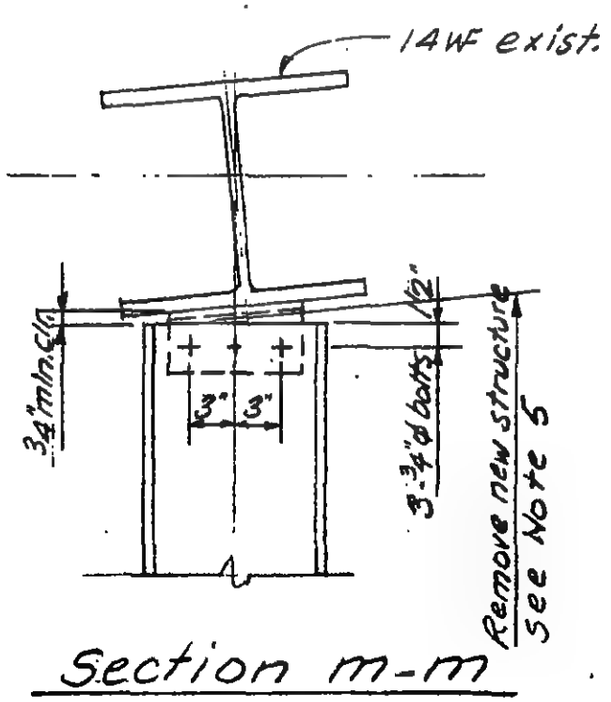

Section m-m

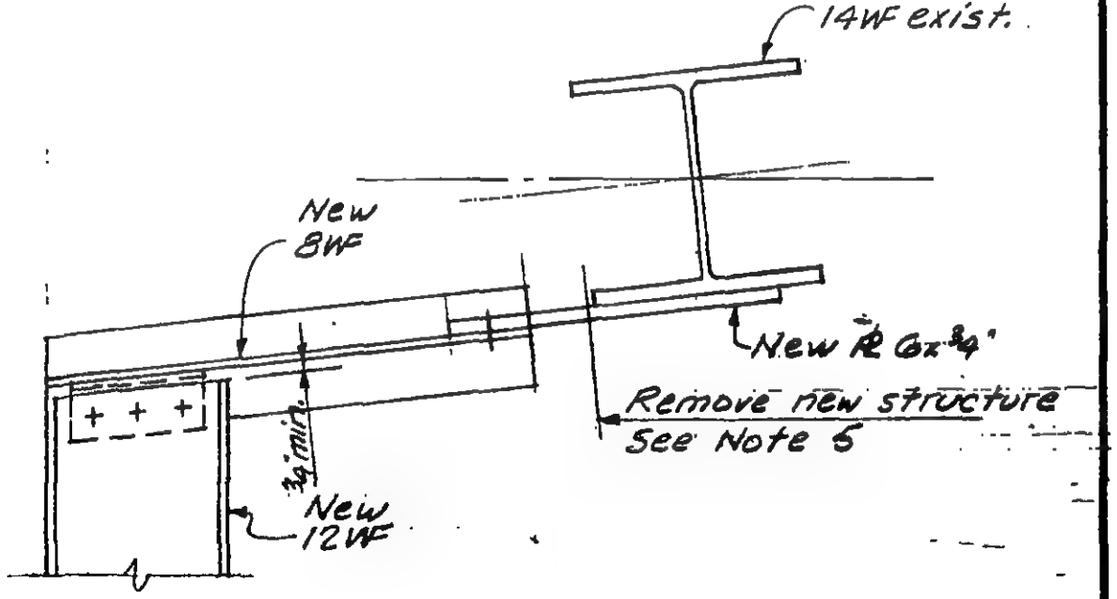

Section n-n

LICENSED PROFESSIONAL ENGINEER — LESLIE E. ROBERTSON — No. 34360 — UNIVERSITY OF THE STATE OF NEW YORK

DESIGNED: M. RAMANI

DRAWN: A. FRANQUI

REVIEWED:

19-B-1108.10

SKILLING, HELLE, CHRISTIANSEN, ROBERTSON — Structural & Civil Engineers

PROJECT: THE WORLD TRADE CENTER | TITLE: TOWER B-P.H.- SHAFT 50 EXTENSION | DATE: 1-10-72

REVISIONS

R

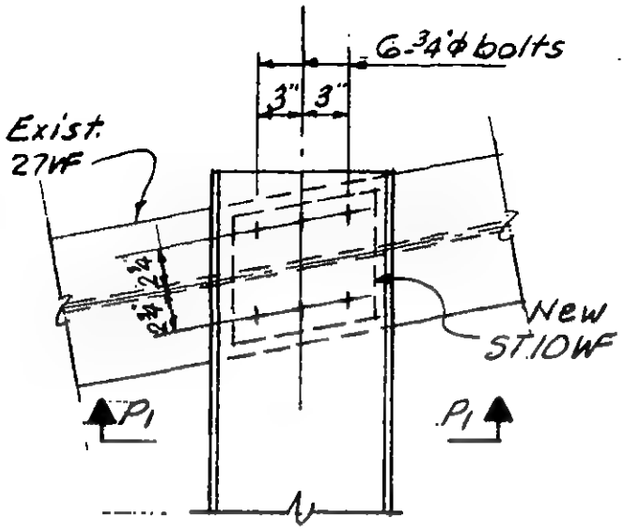

Detail P

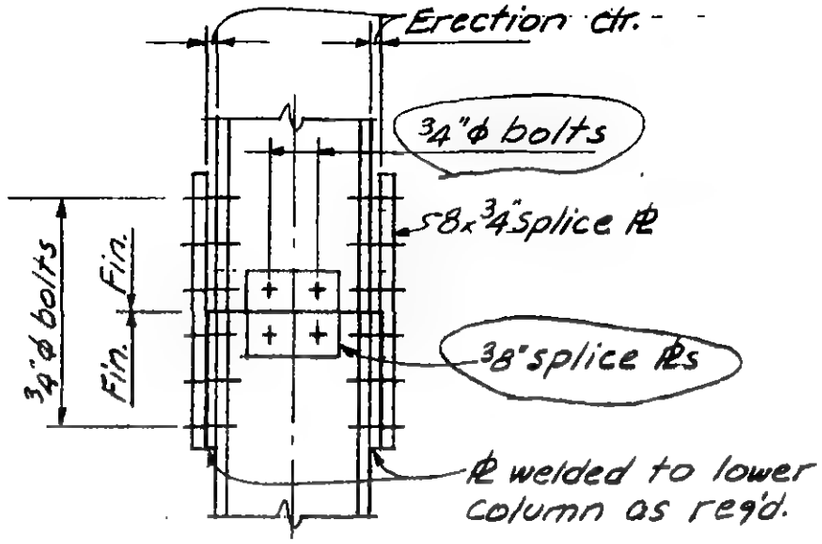

Detail Q
Typical Column Splice Detail

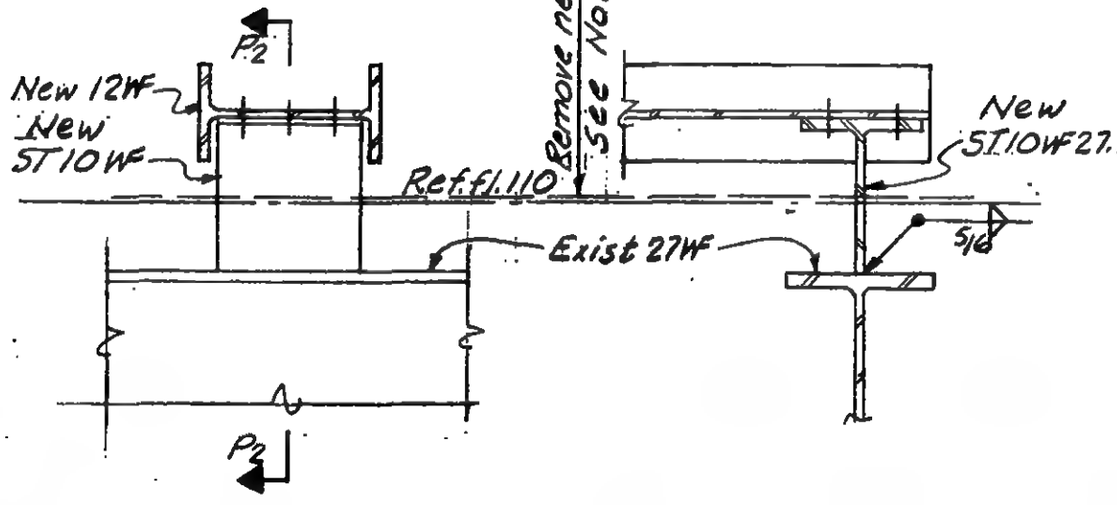

Section P1-P1

Section P2-P2

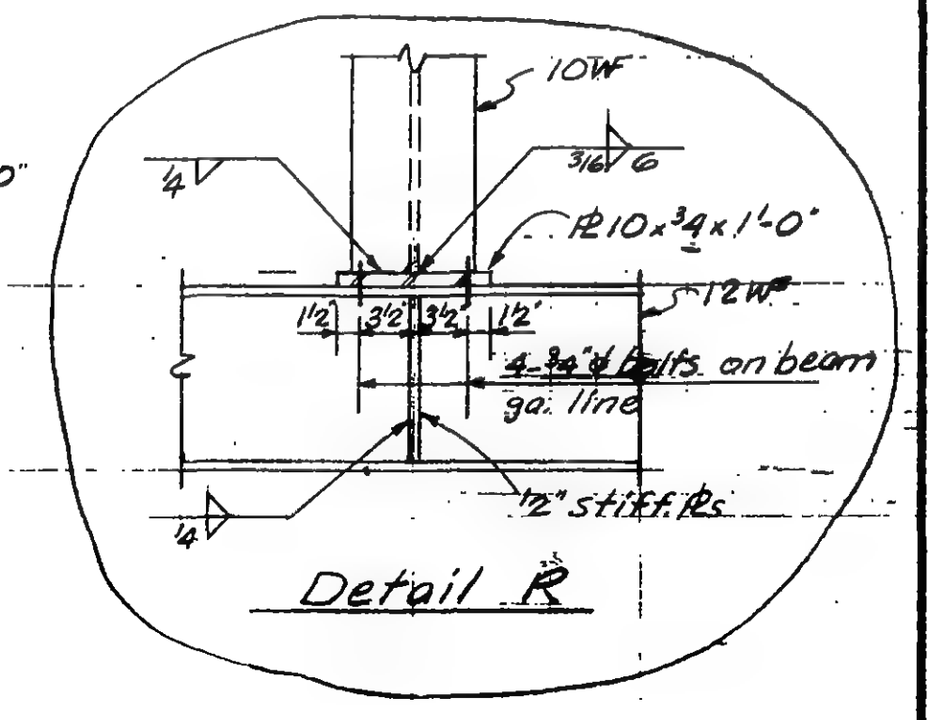

Detail R

LICENSED PROFESSIONAL ENGINEER — LESLIE E. ROBERTSON — No. 34360 — UNIVERSITY OF THE STATE OF NEW YORK

DESIGNED: M. RAMANI

DRAWN: A. PRANQUI

REVIEWED:

19-B-1108.11

SKILLING, HELLE, CHRISTIANSEN, ROBERTSON — Structural & Civil Engineers

PROJECT: THE WORLD TRADE CENTER | TITLE: TOWER 2 - P.H. - SHAFT 50 EXTENSION | DATE: 1-10-72

REVISIONS

R

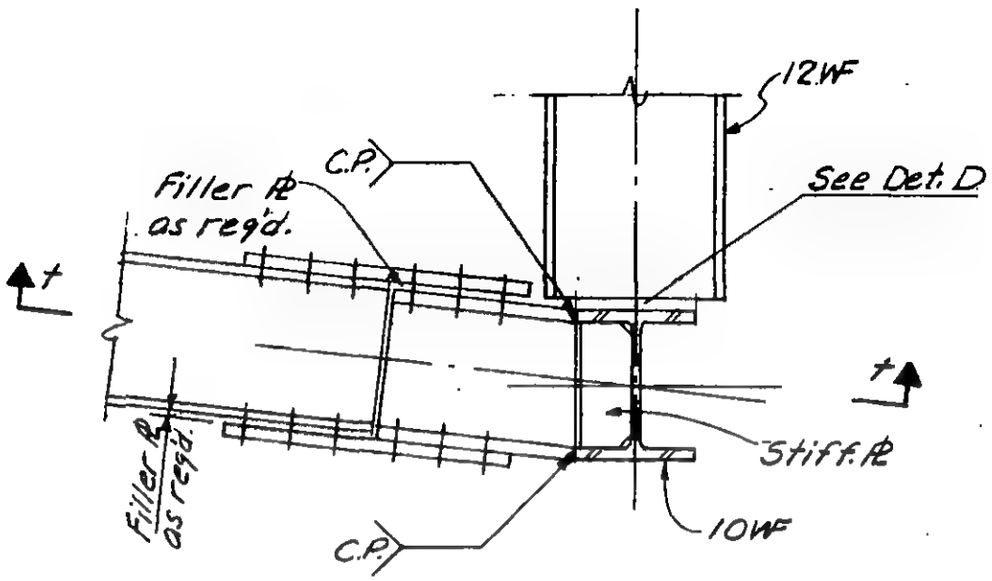

Detail S

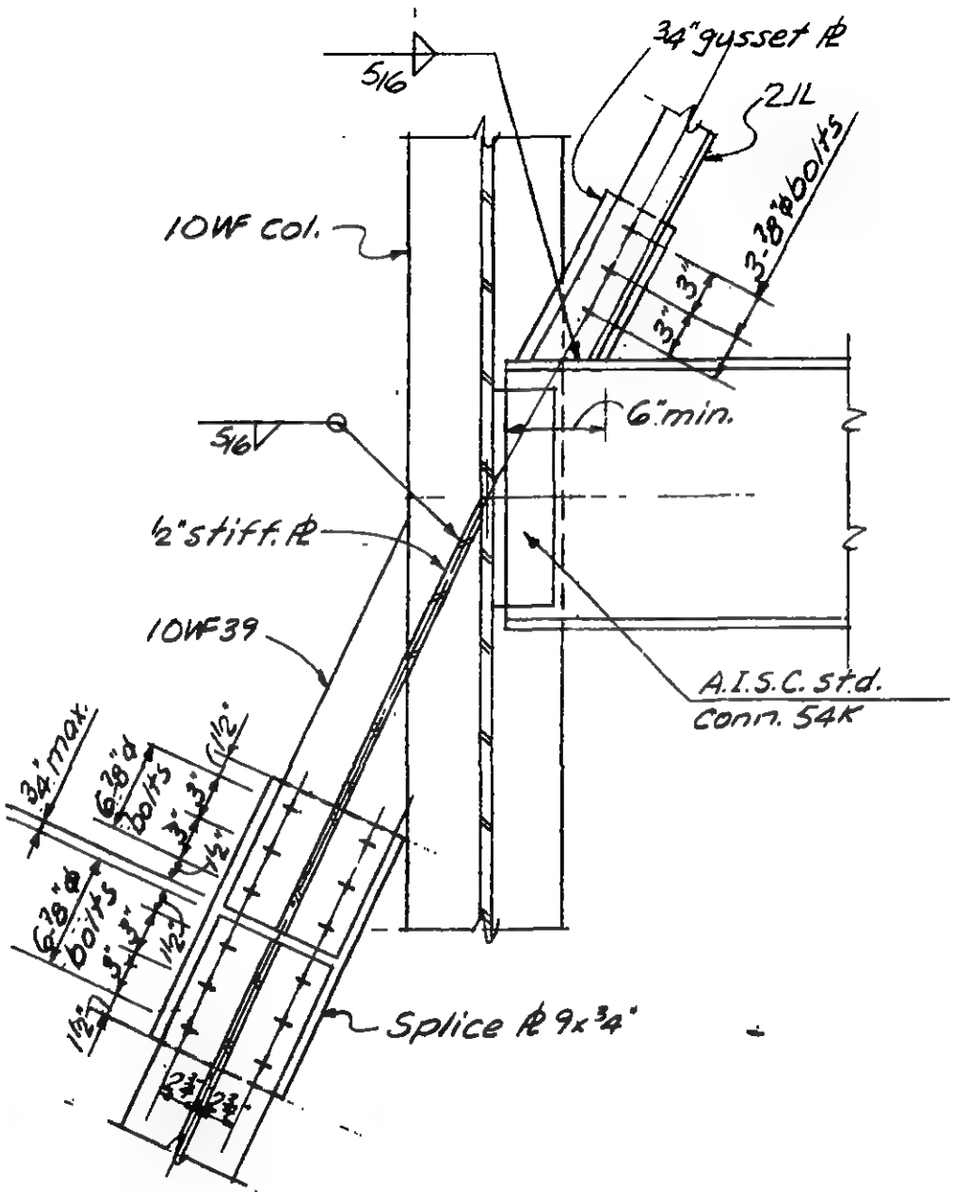

Section t-t

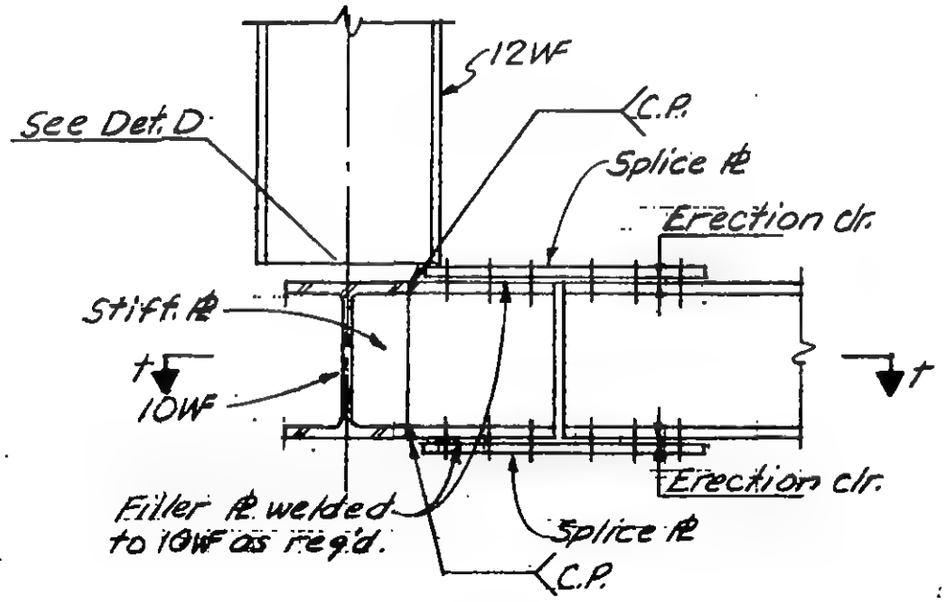

Detail T

LICENSED PROFESSIONAL ENGINEER — LESLIE E. ROBERTSON — UNIVERSITY OF THE STATE OF NEW YORK — NO. 34360

DESIGNED: M. RAMANI

DRAWN: A. FRANQUI

REVIEWED:

19-B-1108.12

SKILLING, HELLE, CHRISTIANSEN, ROBERTSON

PROJECT THE WORLD TRADE CENTER | TITLE TOW[redacted]TENSION | DATE 1-10-72

REVISIONS

R

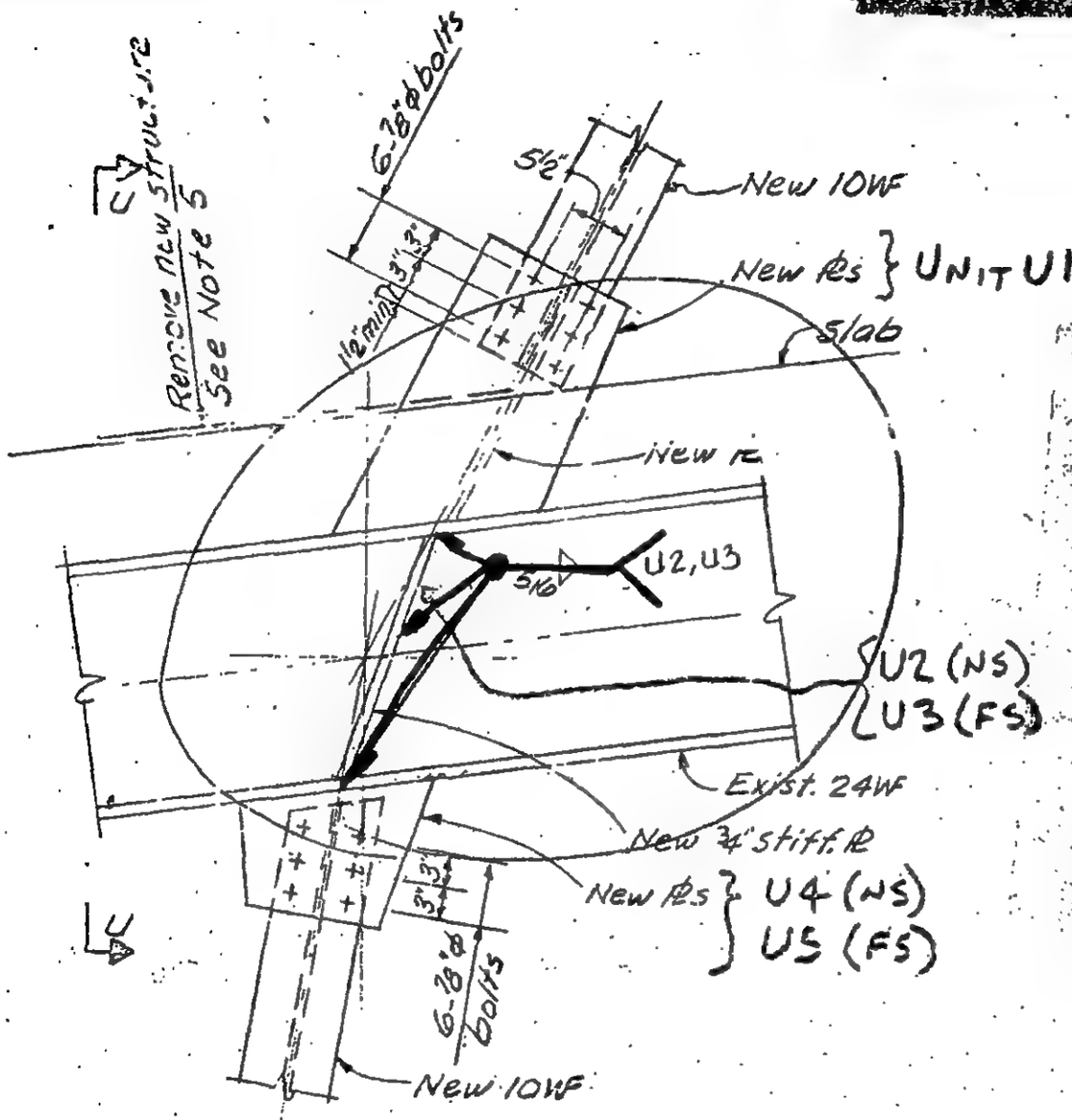

Detail U

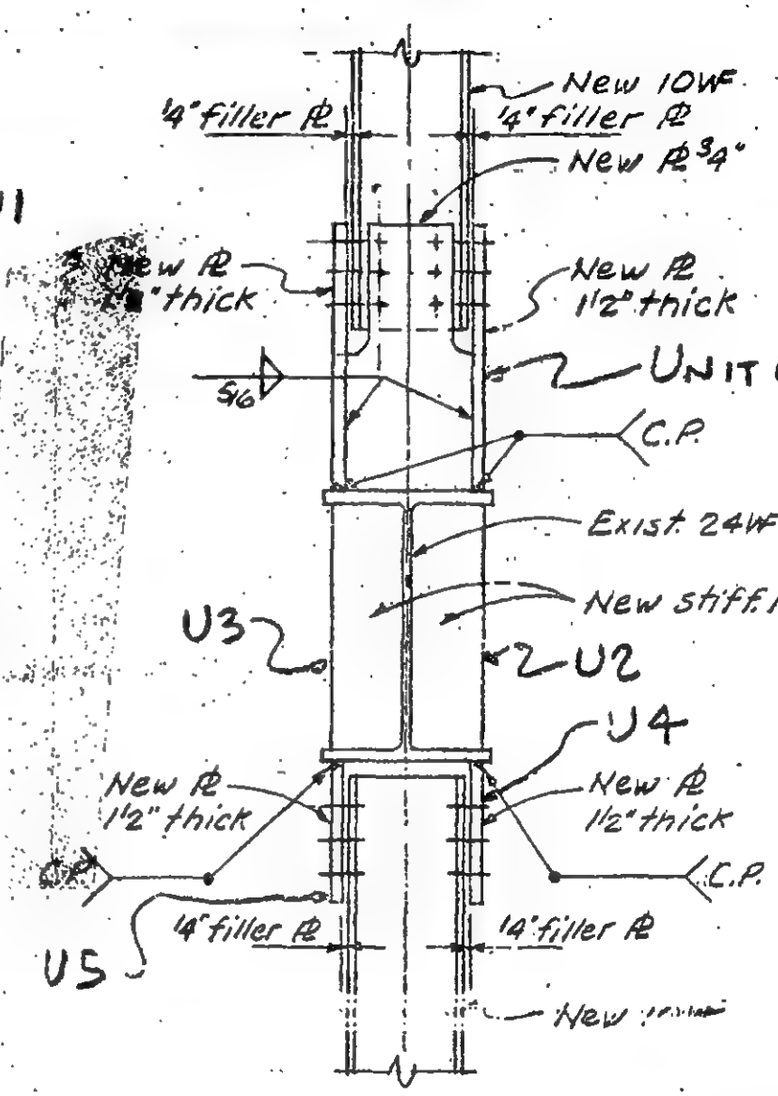

Section U-U

SKILLING - HELLE
CHRISTIANSEN - ROBERTSON
Structural & Civil Engineers

- ☐ APPROVED
- ☑ APPROVED AS NOTED
- ☑ RESUBMIT
- ☐ REJECTED

Date 3/6/72 By ALR

LICENSED PROFESSIONAL ENGINEER
LESLIE E ROBERTSON
NO. 34360
OF THE STATE OF NEW YORK

DESIGNED M.R.AMANI
DRAWN

19-B-1108.13

ERECTION PLAN
E8

SKILLING, HELLE, CHRISTIANSEN, ROBERTSON — Structural & Civil Engineers

PROJECT: THE WORLD TRADE CENTER | TITLE: TOWER B - PH + SHAFT 50 EXTENSION | DATE: 1-10-72

REVISIONS

R

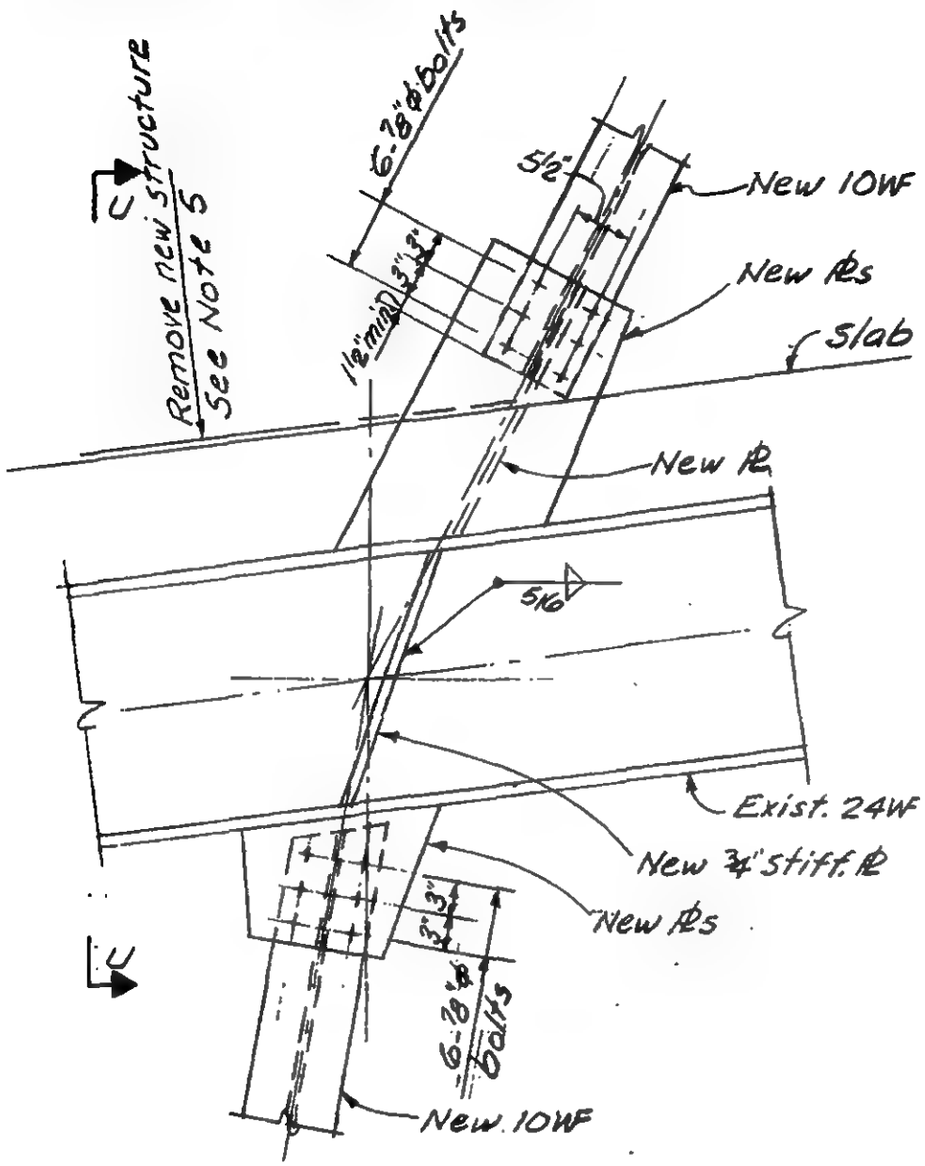

Detail U

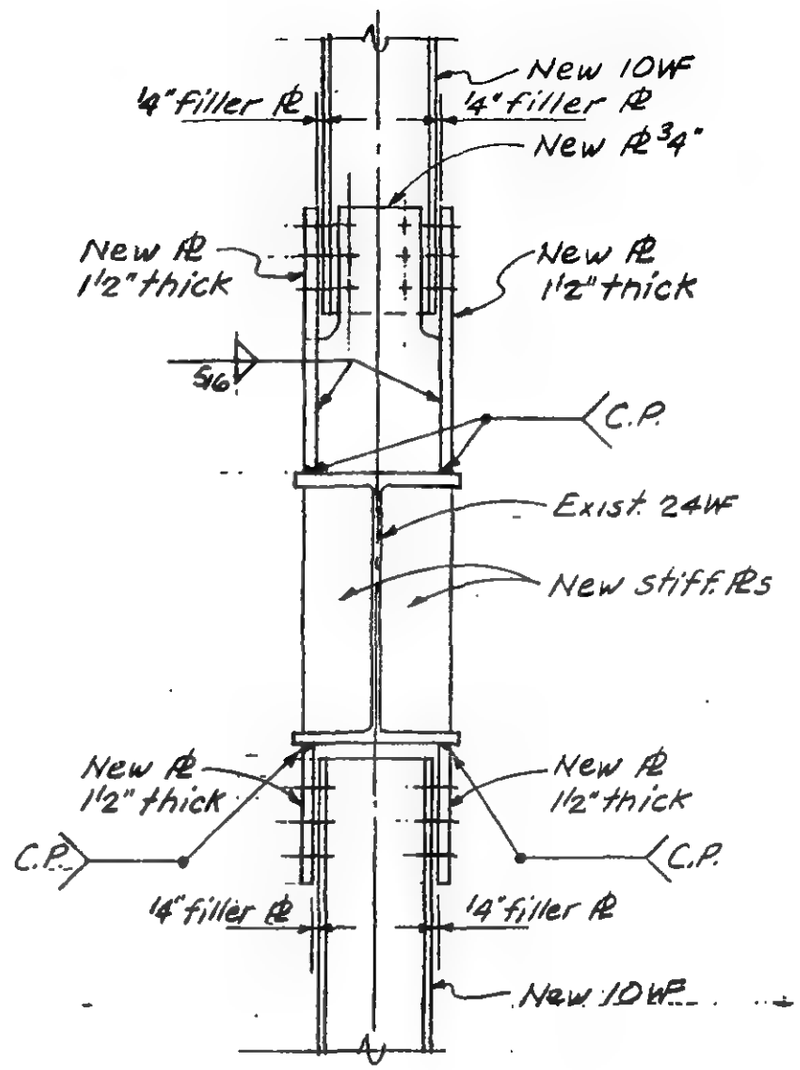

Section U-U

LICENSED PROFESSIONAL ENGINEER — LESLIE E. ROBERTSON — No. 34360 — UNIVERSITY OF THE STATE OF NEW YORK

DESIGNED: M. RAMANI

DRAWN: A. FRANQUI

REVIEWED:

19-B-1108.13

SKILLING, HELLE, CHRISTIANSEN, ROBERTSON

PROJECT THE WORLD TRADE CENTER | TITLE TOWER [redacted] SHAFT 50 EXTENSION | DATE 1-10-72

REVISIONS

R

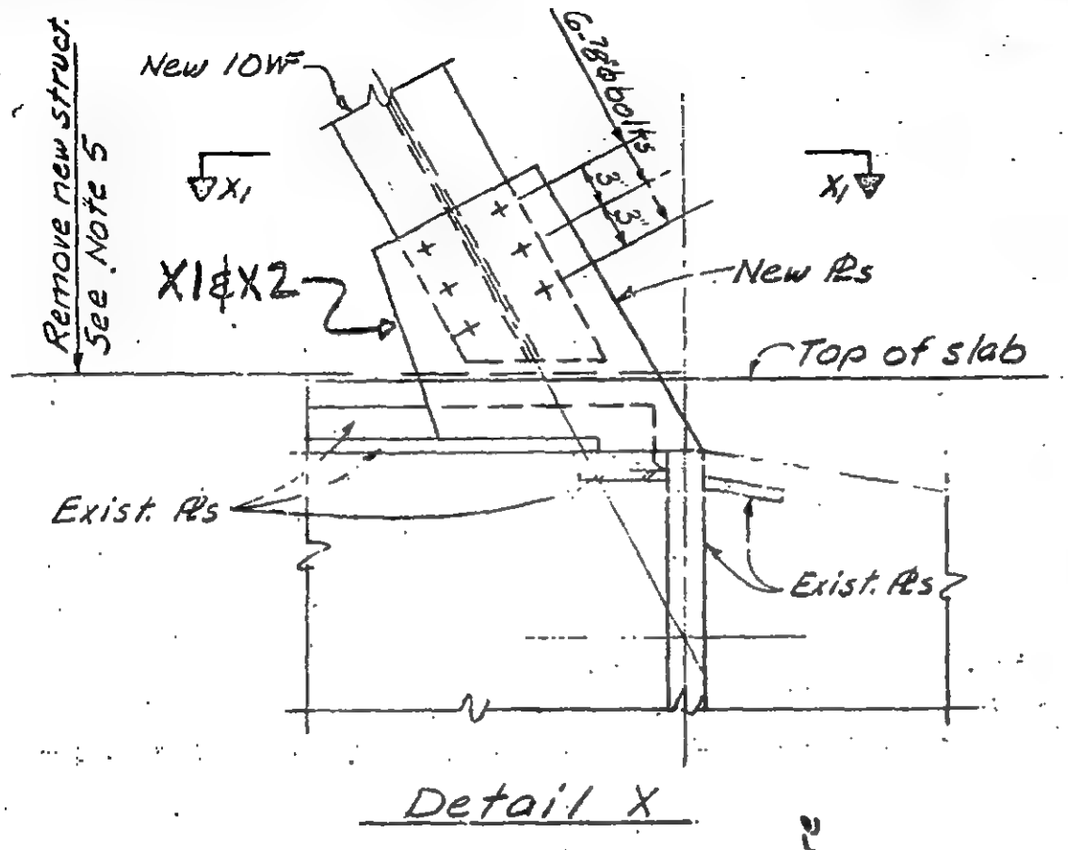

Detail X

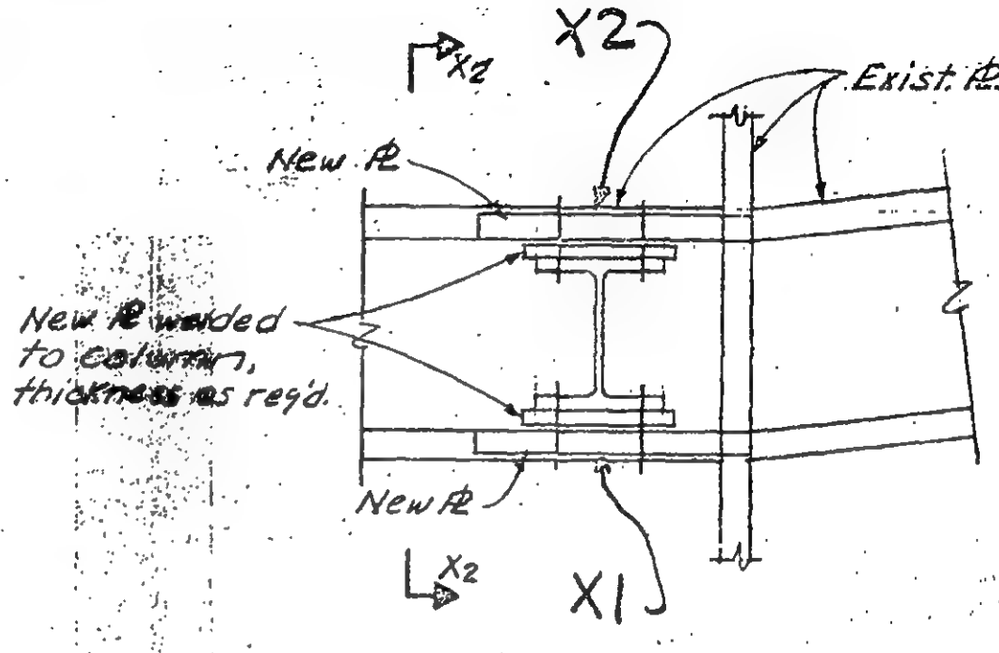

Section X1 - X1

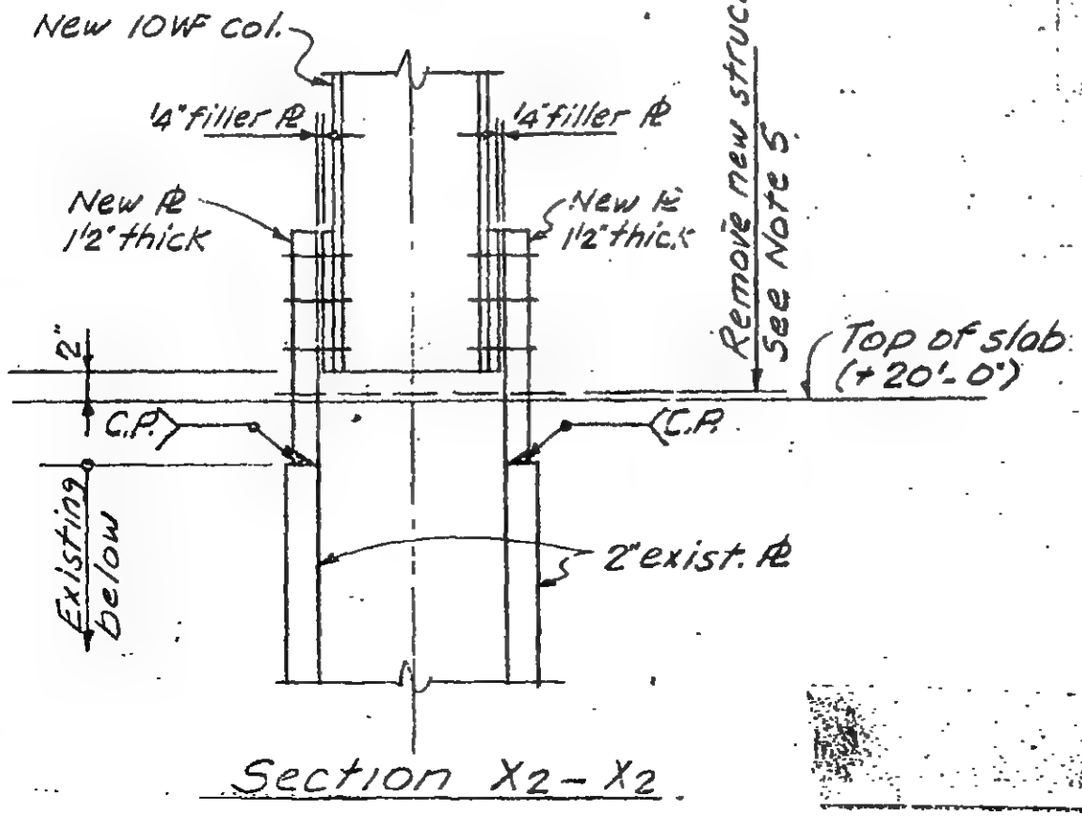

Section X2 - X2

SKILLING - HELLE CHRISTIANSEN - ROBERTSON
Structural & Civil Engineers
☑ APPROVED
☐ APPROVED AS NOTED
☑ RESUBMIT
☐ REJECTED
Date 3/6/72 By A.L.R

LICENSED PROFESSIONAL ENGINEER LESLIE E. ROBERTSON No 34360 OF THE STATE OF NEW YORK

DESIGNED M. RAMANI

19-B-1108.14

ERECTION PLAN E9

SKILLING, HELLE, CHRISTIANSEN, ROBERTSON — Structural & Civil Engineers

PROJECT: THE WORLD TRADE CENTER | TITLE: TOWER B-PH-SHAFT 50 EXTENSION | DATE: 1-10-72

REVISIONS

R

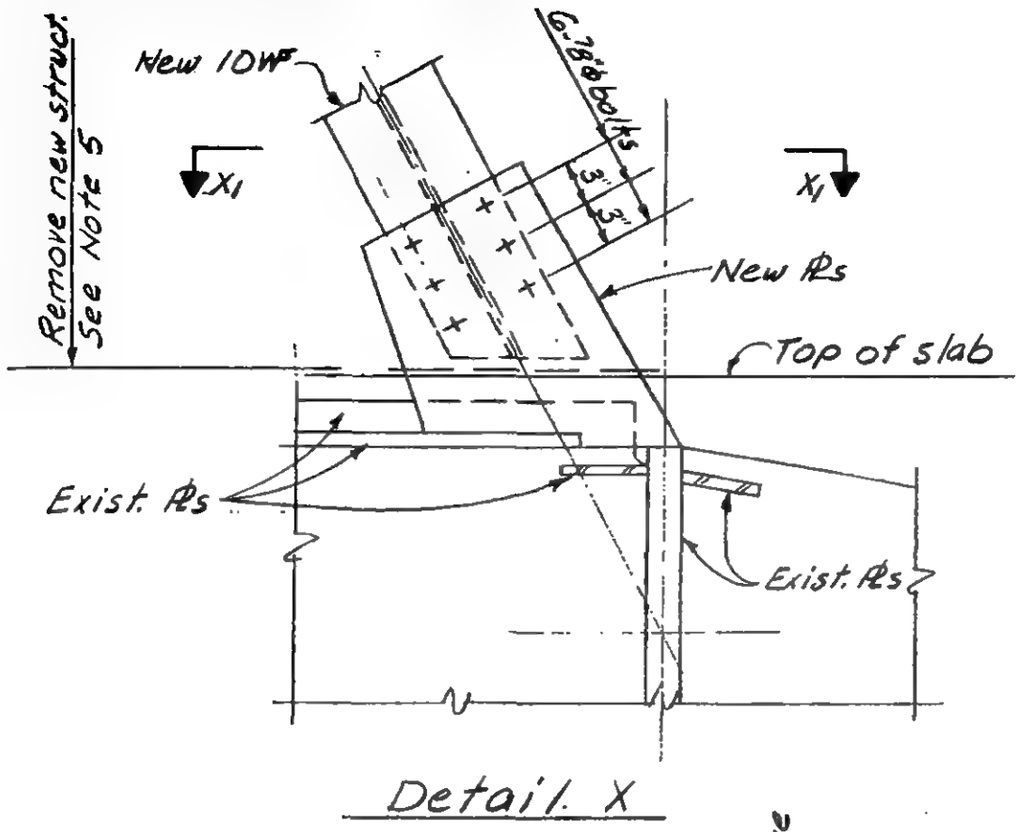

Detail X

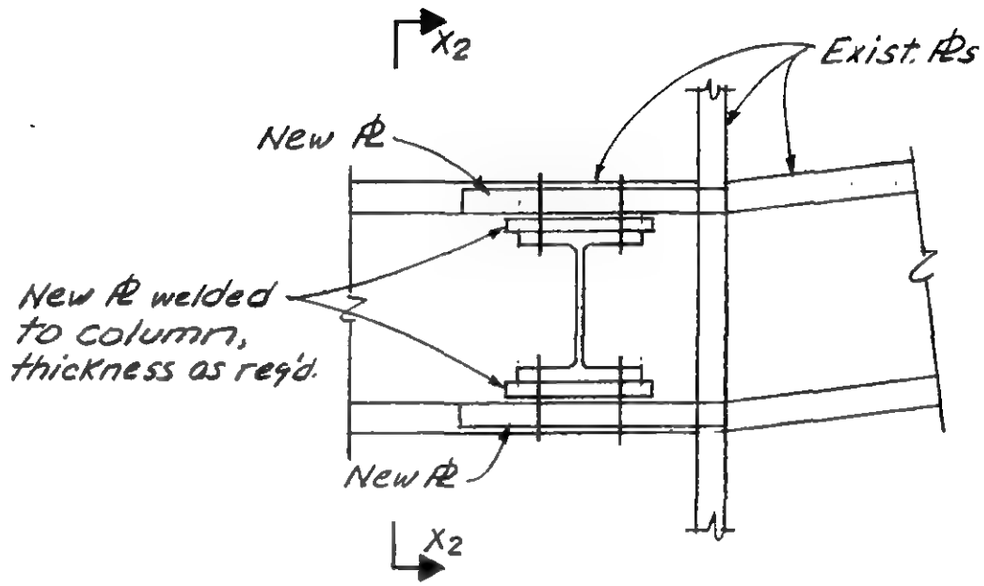

Section X1-X1

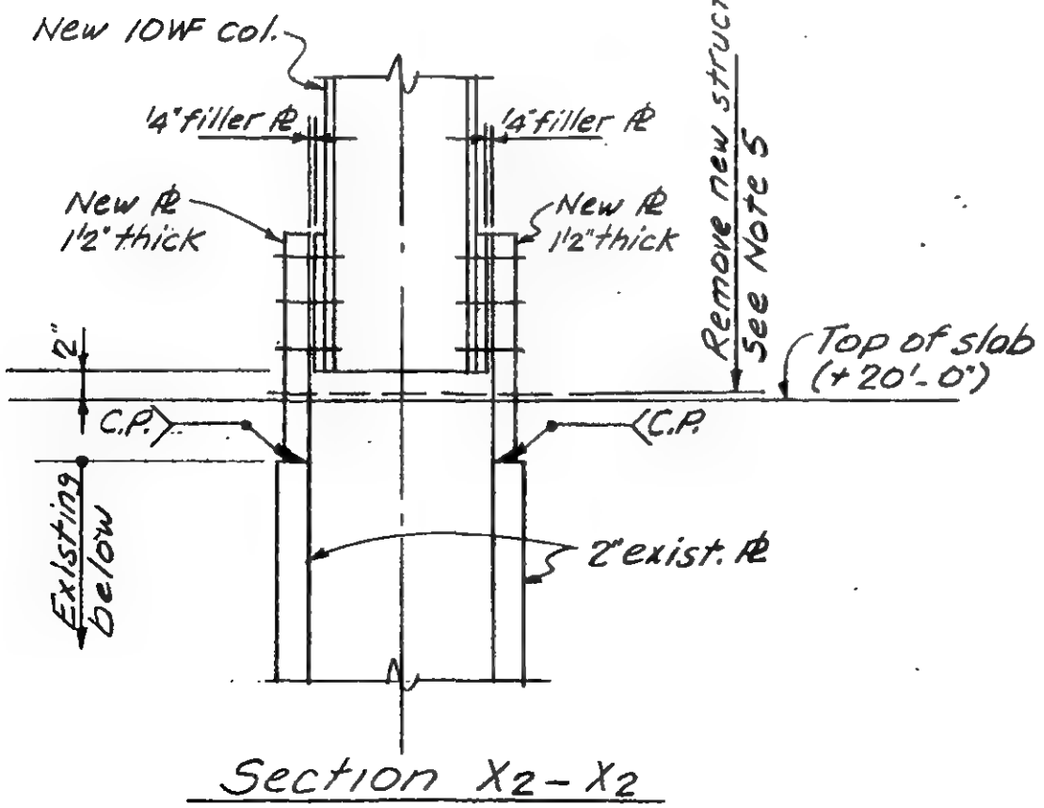

Section X2-X2

LICENSED PROFESSIONAL ENGINEER — LESLIE E. ROBERTSON — No. 34860 — UNIVERSITY OF THE STATE OF NEW YORK

DESIGNED M. RAMANI

DRAWN A. FRANQUI

REVIEWED

19-B-1108.14

SKILLING, HELLE, CHRISTIANSEN, ROBERTSON — Engineers

PROJECT THE WORLD TRADE CENTER | TITLE TOWER [redacted] O EXTENSION | DATE 1-10-72

REVISIONS

R

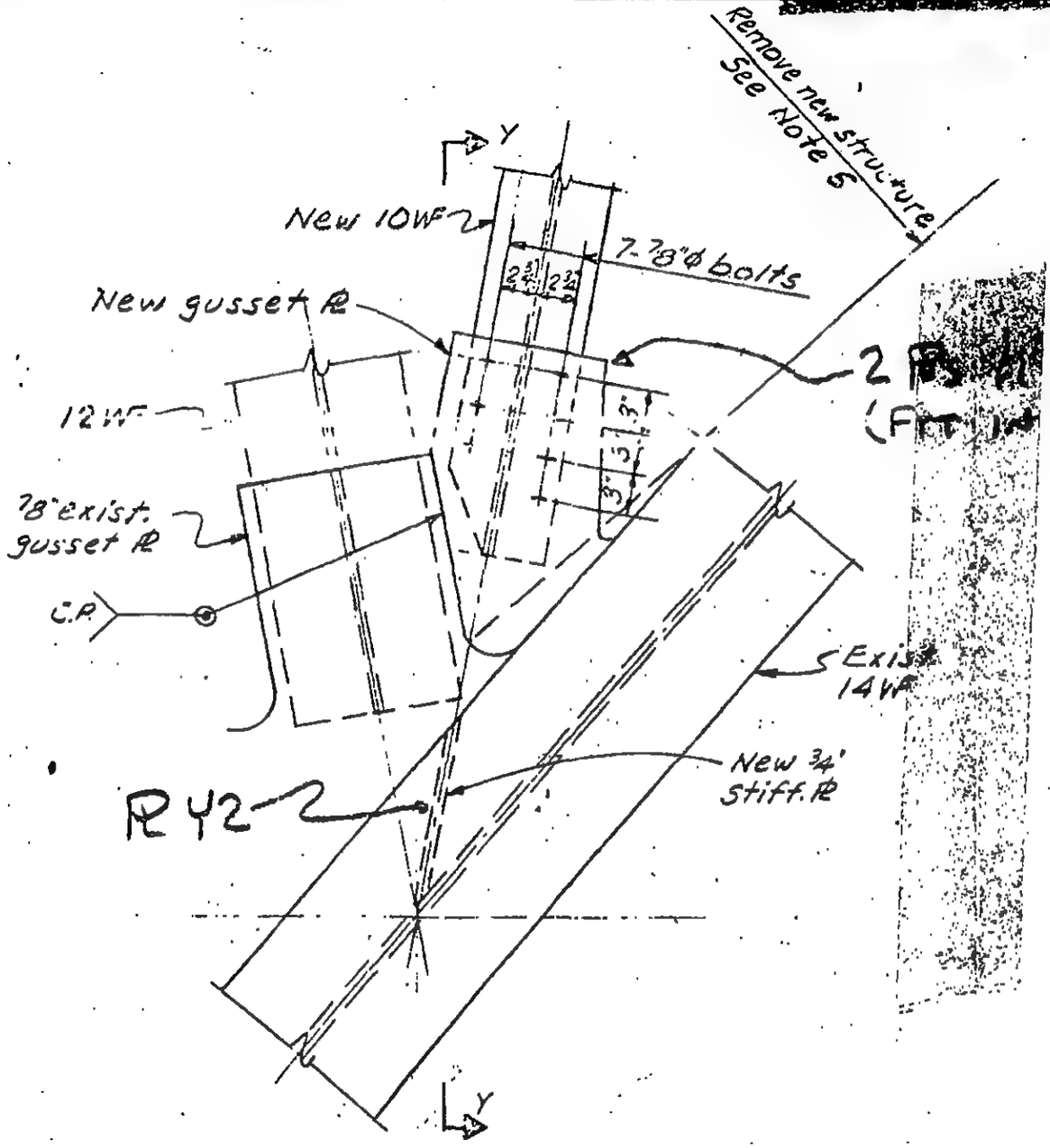

Detail Y

(FIELD)

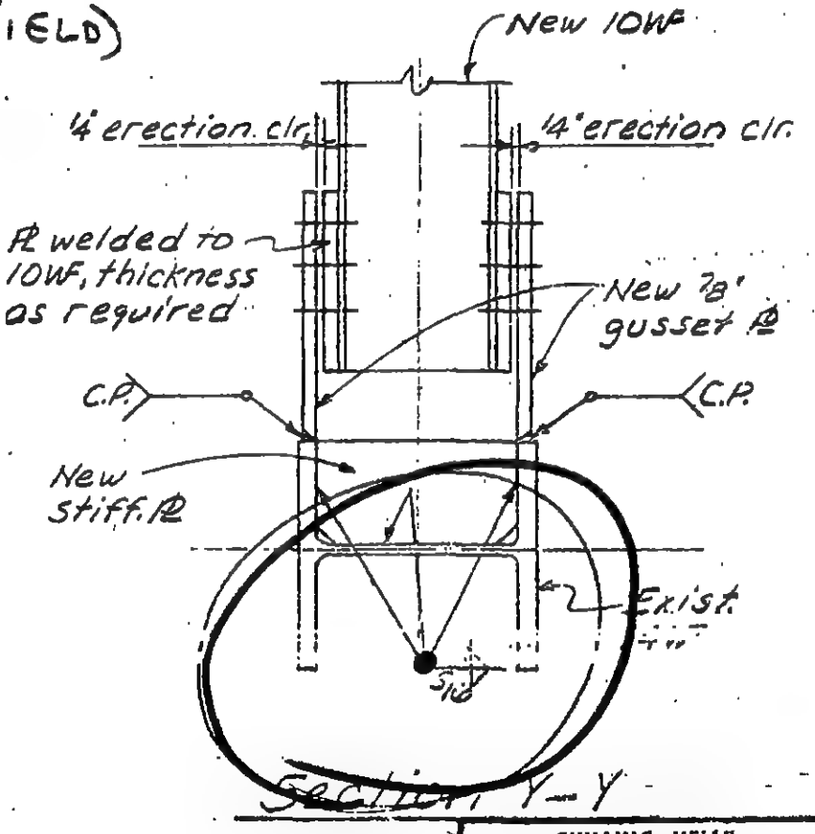

SKILLING - HELLE CHRISTIANSEN - ROBERTSON
Structural & Civil Engineers

- ☐ APPROVED
- ☑ APPROVED AS NOTED
- ☐ RESUBMIT
- ☐ REJECTED

Date 3/6/72 By ALR

19-B-1108.15

ERECTION PLAN

LICENSED PROFESSIONAL ENGINEER LESLIE E. ROBERTSON NO. 34360 THE STATE OF NEW YORK

DESIGNED M. RAMANI

DRAWN

[redacted]

SKILLING, HELLE, CHRISTIANSEN, ROBERTSON — Structural & Civil Engineers

PROJECT: THE WORLD TRADE CENTER | TITLE: TOWER B - PH - SHAFT 50 EXTENSION | DATE: 1-10-72

REVISIONS

R

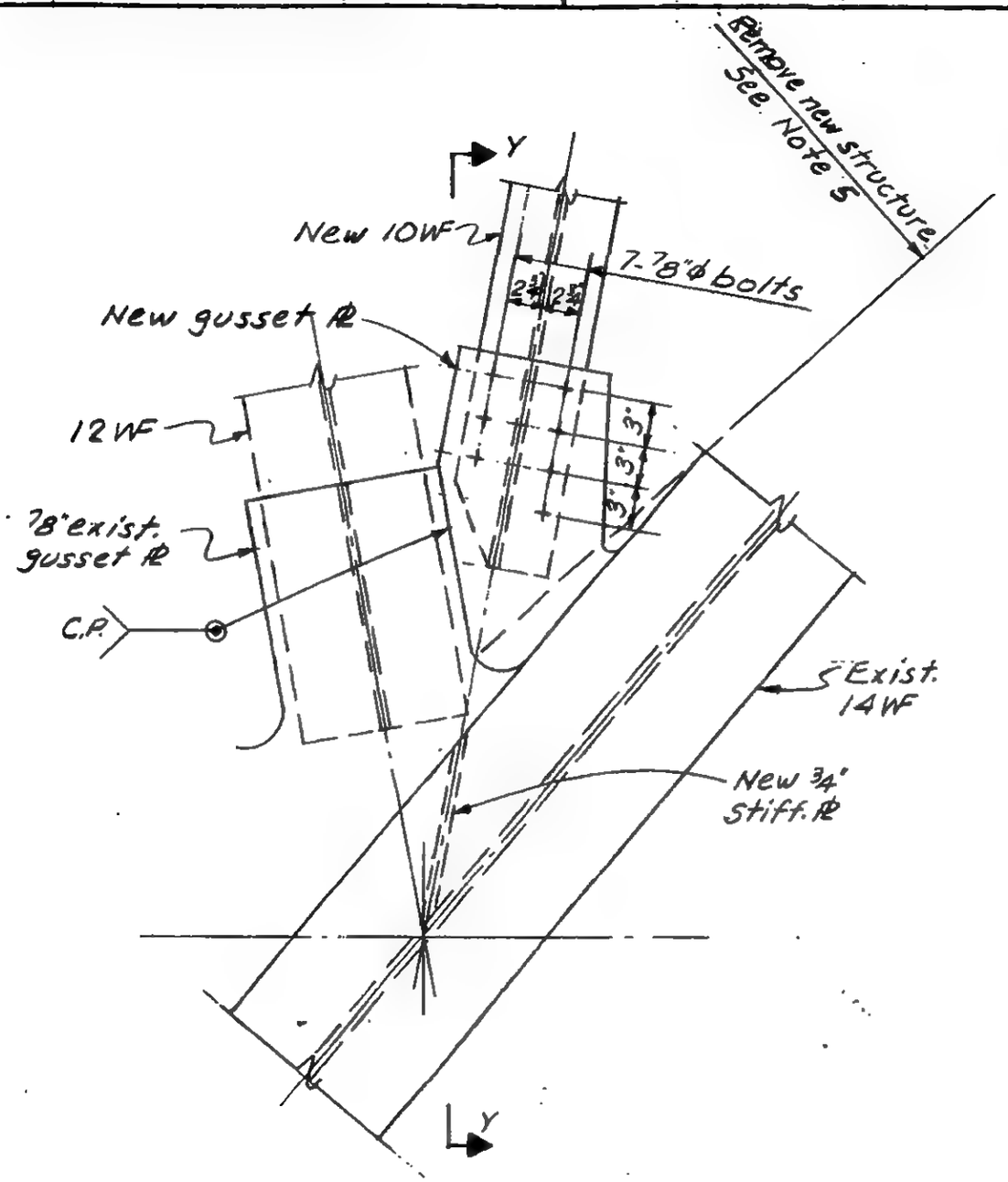

Detail Y

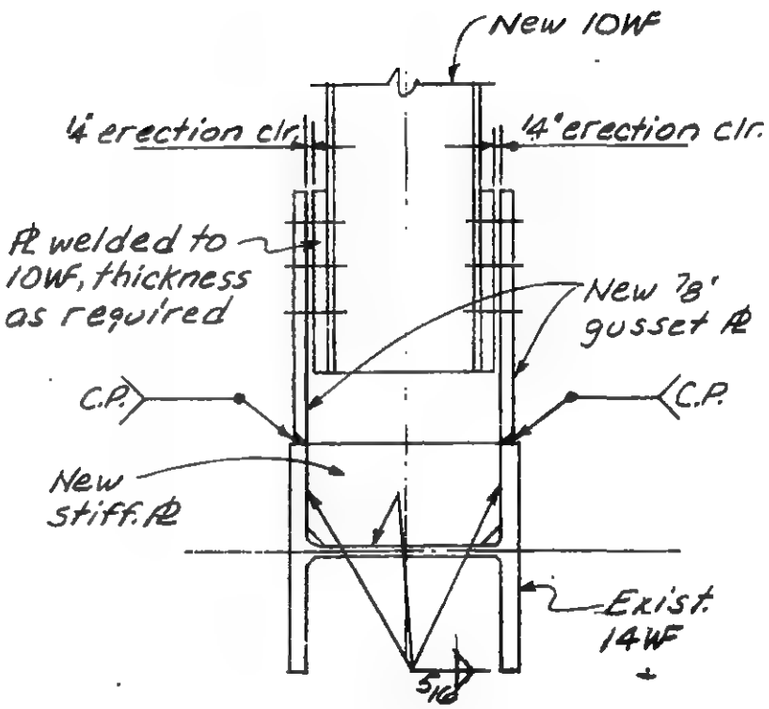

Section Y-Y

LICENSED PROFESSIONAL ENGINEER — LESLIE E. ROBERTSON — No. 34360 — UNIVERSITY OF THE STATE OF NEW YORK

DESIGNED: M. RAMANI

DRAWN: A. FRANQUI

REVIEWED:

19-B-1108.15

SKILLING, HELLE, CHRISTIANSEN, ROBERTSON — Structural & Civil Engineers

PROJECT: THE WORLD TRADE CENTER | TITLE: TEMPORARY RELOCATION OF ELEV. 50 MACHINE | DATE: 2-28-72

REVISIONS

See Drawing
19-B-1108.17 for Sect. EE & FF
.18 for Sect. GG & HH
.19 for Det. AA
.20 for Det. BB
.21 for Det. CC, DD, EE & FF
.22 for Det. GG & HH

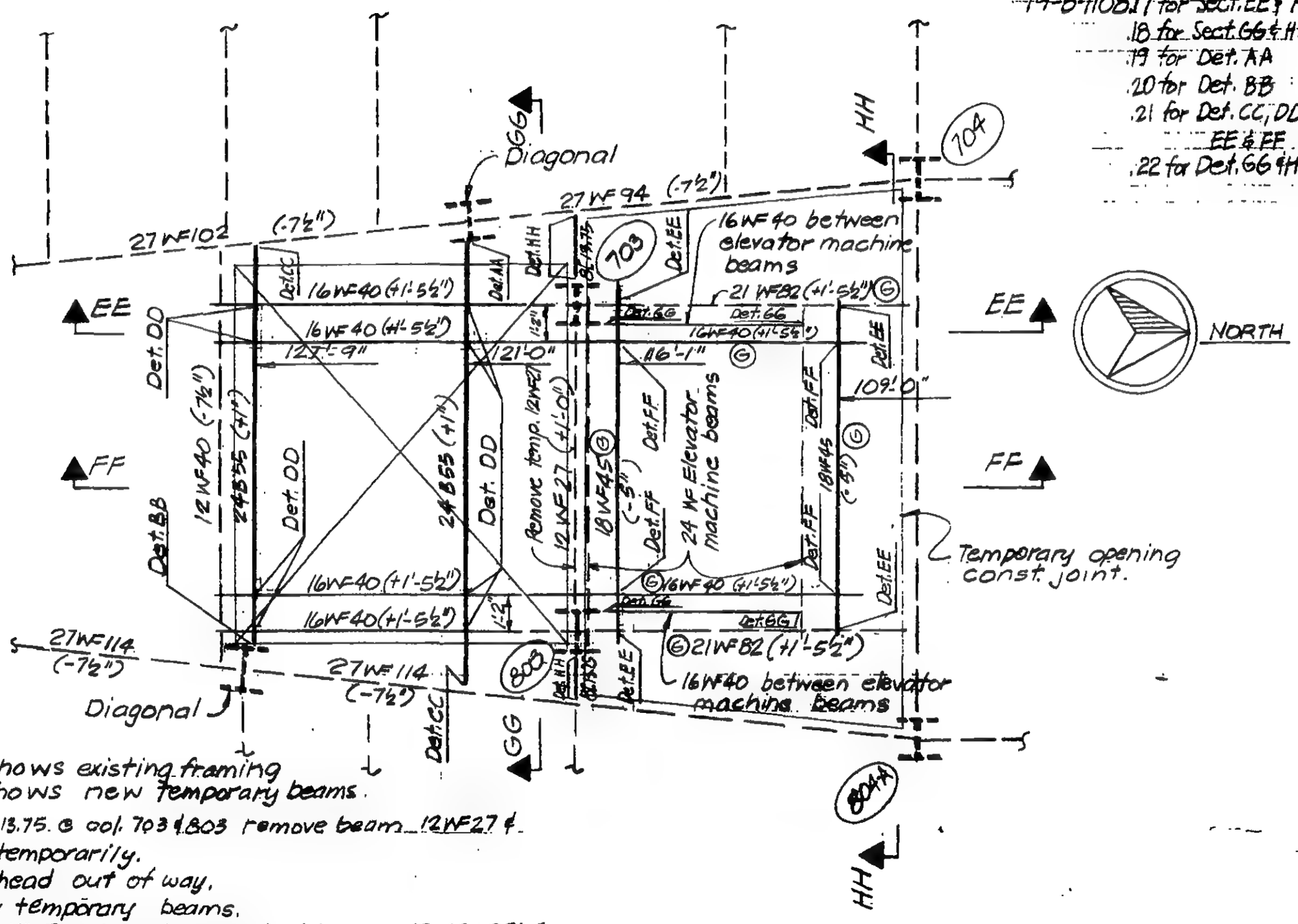

Part Plan 110th Floor

Notes:

----- Shows existing framing
——— Shows new temporary beams.

Ⓐ Install 8 L 13.75. @ col. 703 & 803 remove beam 12 WF 27 & store it temporarily.
Ⓑ Lower cathead out of way.
Ⓒ Install new temporary beams.
Ⓓ Remove Exist Temporary support shown on 19-AB-951.4.
Ⓔ Lower Machine on to rollers.
Ⓕ Roll Machine to temporary location shaft 99
Ⓖ Remove Temporary Members and permanent 21 WF in shaft 50. Store temporarily.
When Machine is to be placed in permanent location.
Ⓗ Replace Temporary & permanent members in shaft 50
Ⓙ Move Machine to permanent location, Remove all temporary members & replace 12 WF 27 Ⓐ, 8 L Ⓐ may be left in place.

LICENSED PROFESSIONAL ENGINEER — LESLIE E. ROBERTSON — No. 34960 — UNIVERSITY OF THE STATE OF NEW YORK

DESIGNED: M. Ramani
DRAWN: P.M. Ozki
REVIEWED: LE Brewer

19-B-1108.16

SKILLING, HELLE, CHRISTIANSEN, ROBERTSON — Structural & Civil Engineers

PROJECT: THE WORLD TRADE CENTER | TITLE: TEMPORARY RELOCATION OF ELEV. 50 MACHINE | DATE: 2-28-72

REVISIONS

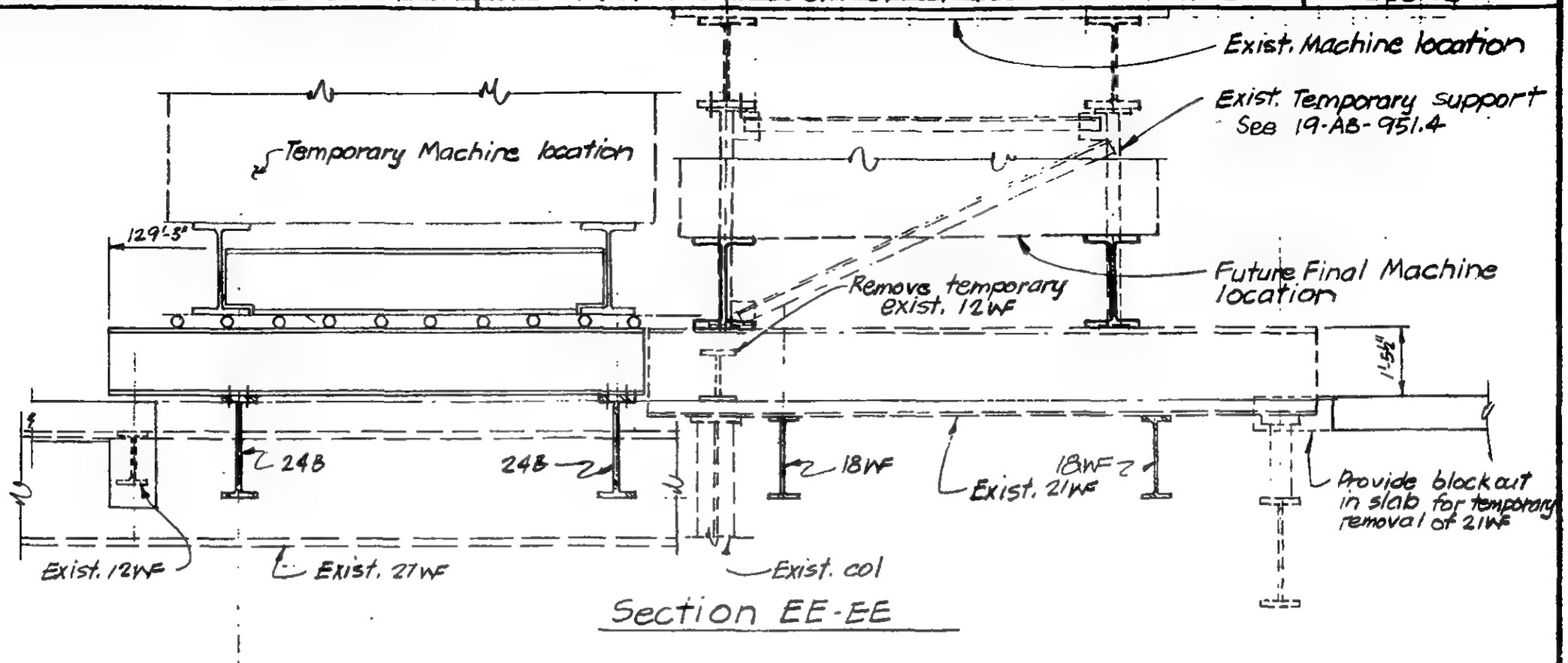

Section EE-EE

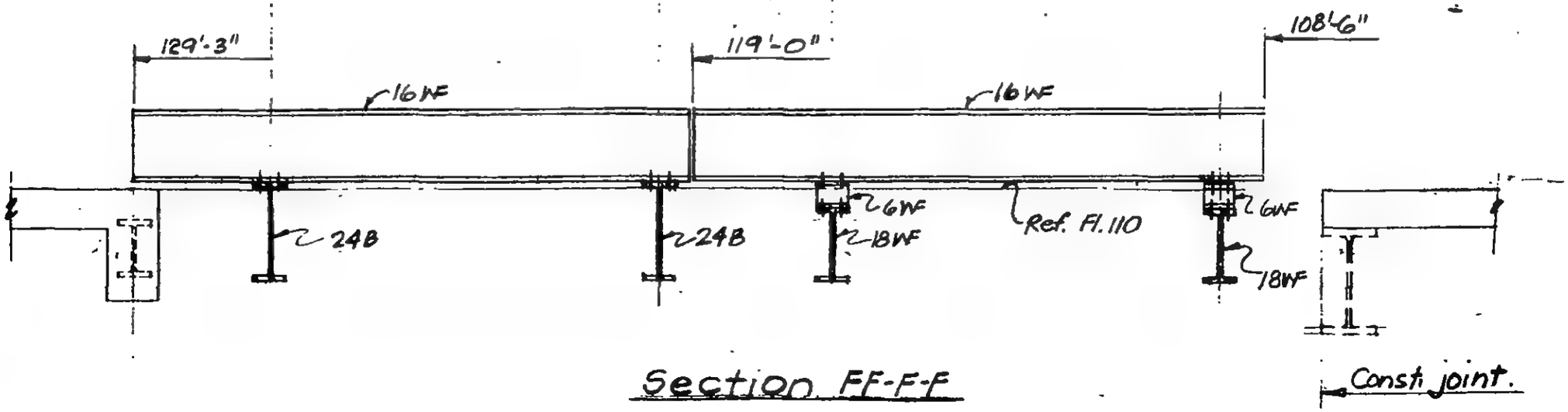

Section FF-F-F

LICENSED PROFESSIONAL ENGINEER — LESLIE E. ROBERTSON — No. 34390 — UNIVERSITY OF THE STATE OF NEW YORK

DESIGNED: M. Ramani
DRAWN: P.M. Ozeki
REVIEWED:

19-B-1108.17

SKILLING, HELLE, CHRISTIANSEN, ROBERTSON — Structural & Civil Engineers

PROJECT: THE WORLD TRADE CENTER | TITLE: TEMPORARY RELOCATION OF ELEV. 60 MACHINE | DATE: 2-28-72

REVISIONS

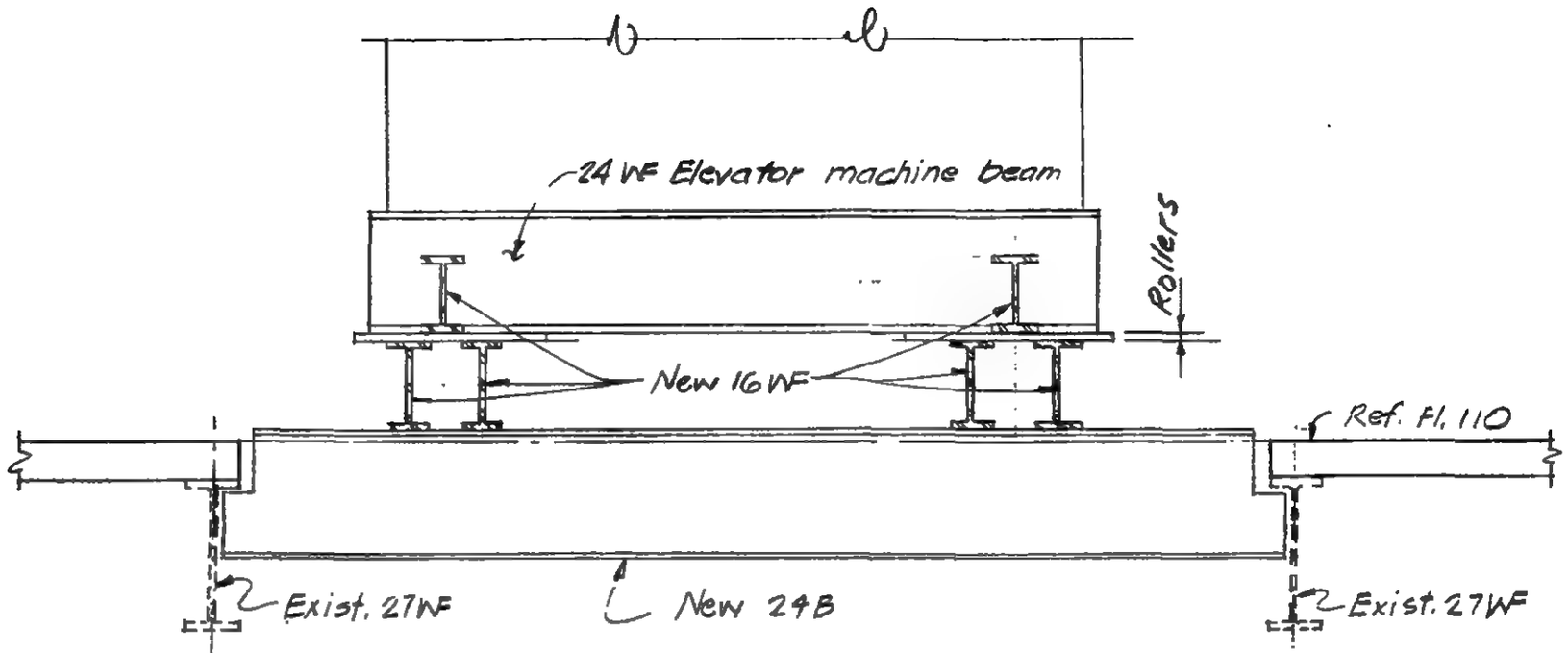

Section GG-GG

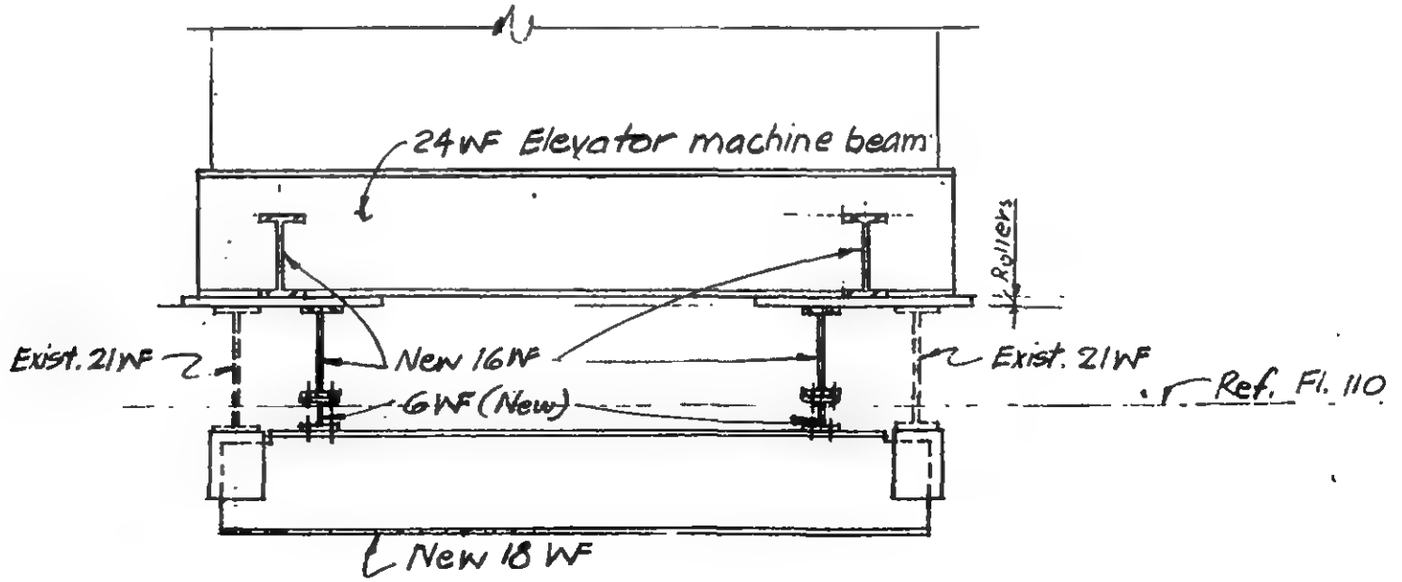

Section HH-HH

LICENSED PROFESSIONAL ENGINEER
LESLIE E. ROBERTSON
No. 34360
UNIVERSITY OF THE STATE OF NEW YORK

DESIGNED: M. Ramani

DRAWN: P.M. Orelli

REVIEWED: [illegible]

19-B-110B..B

SKILLING, HELLE, CHRISTIANSEN, ROBERTSON — Structural & Civil Engineers

PROJECT: THE WORLD TRADE CENTER | TITLE: TEMPORARY ~~RELOCATION~~ OF ELEV. 50 MACHINE | DATE: 2-28-72

REVISIONS

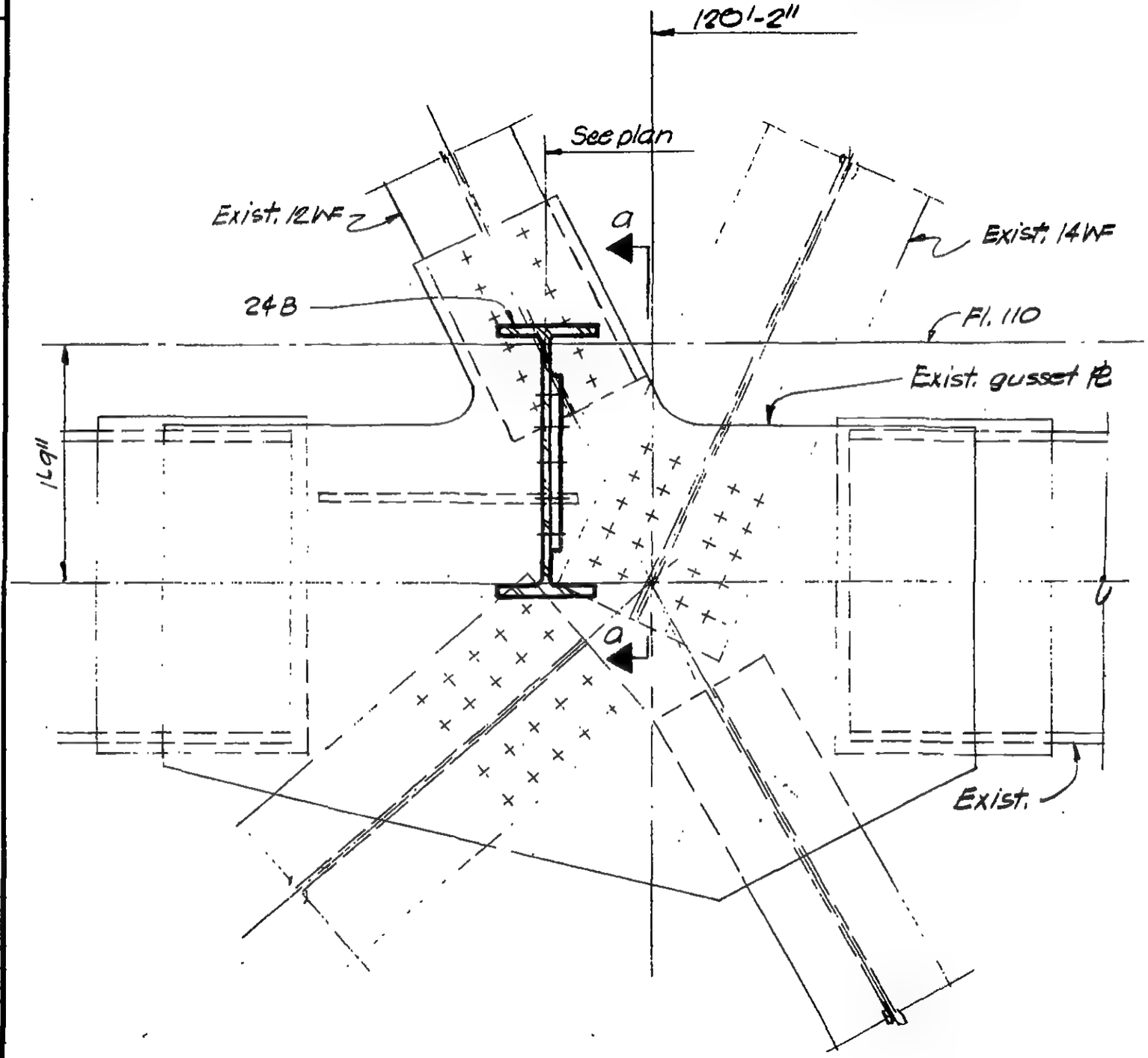

Detail A A

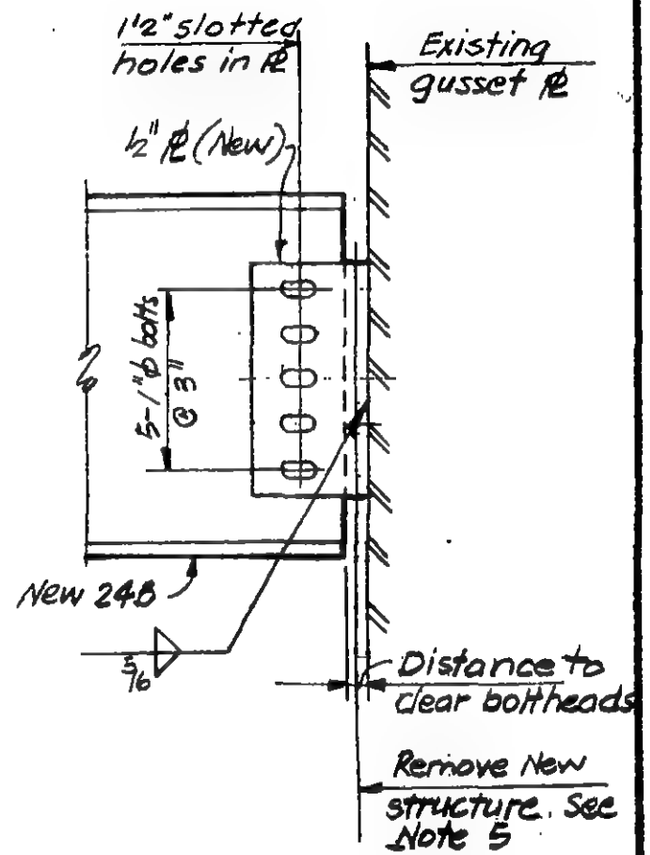

Section a-a

LICENSED PROFESSIONAL ENGINEER
LESLIE E. ROBERTSON
No. 34360
UNIVERSITY OF THE STATE OF NEW YORK

DESIGNED M. Ramoni
DRAWN A.M. Ozbi
REVIEWED

19-B-1108.19

SKILLING, HELLE, CHRISTIANSEN, ROBERTSON — Structural & Civil Engineers

PROJECT ~~THE WORLD TRADE CENTER~~ | TITLE TEMPORARY RELOCATION OF ELEV. 50 MACHINE | DATE 2-28-72

REVISIONS

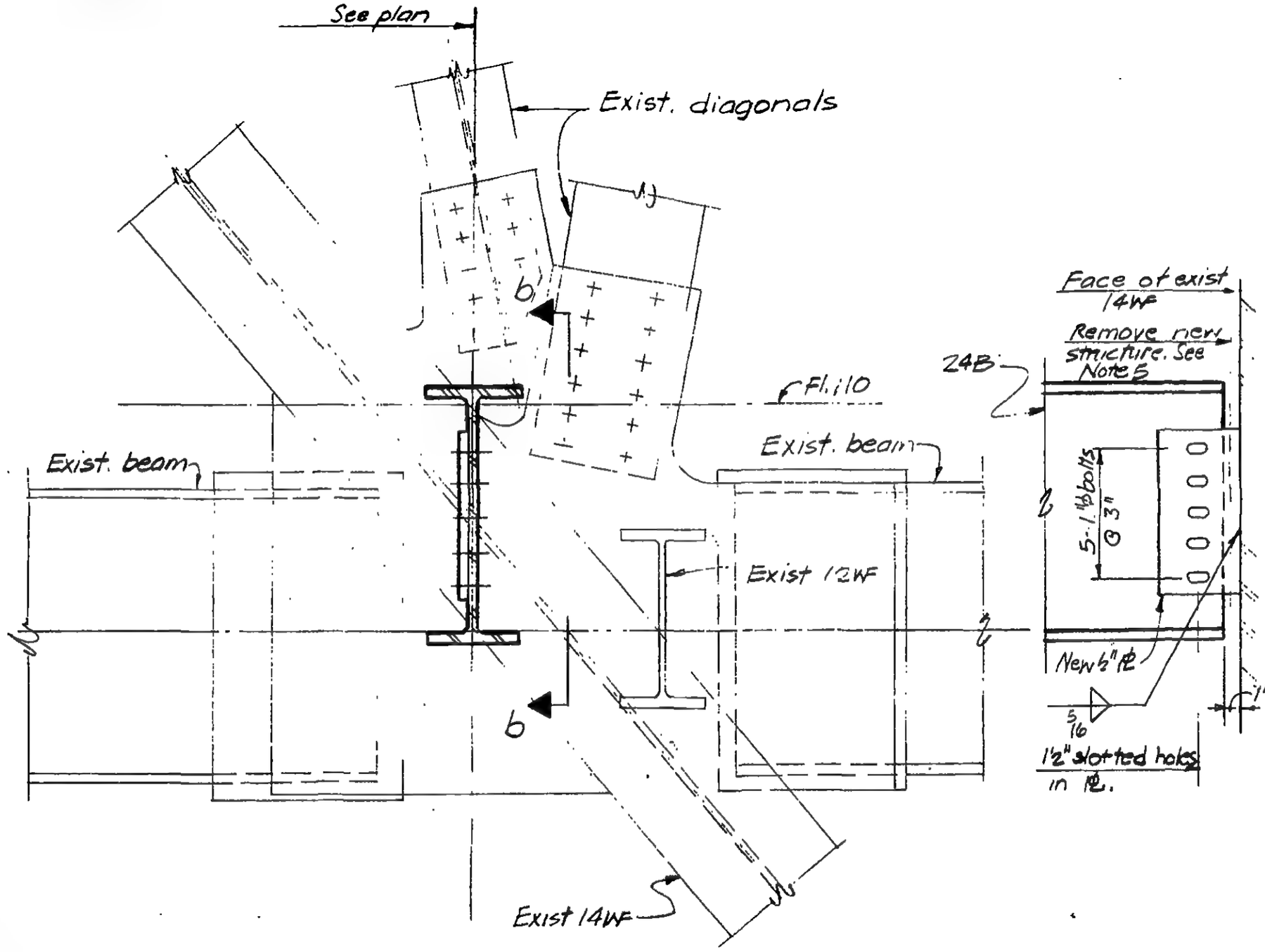

Detail BB

Section b-b

LICENSED PROFESSIONAL ENGINEER
LESLIE E. ROBERTSON
No. 34360
UNIVERSITY OF THE STATE OF NEW YORK

DESIGNED M. Ramani

DRAWN P.M. Ordi

REVIEWED LW Brewer

19-B-1108.20

SKILLING, HELLE, CHRISTIANSEN, ROBERTSON — Structural & Civil Engineers

PROJECT: THE WORLD TRADE CENTER | TITLE: TEMPORARY RELOCATION OF ELEV. 50 MACHINE | DATE: 2-28-72

REVISIONS

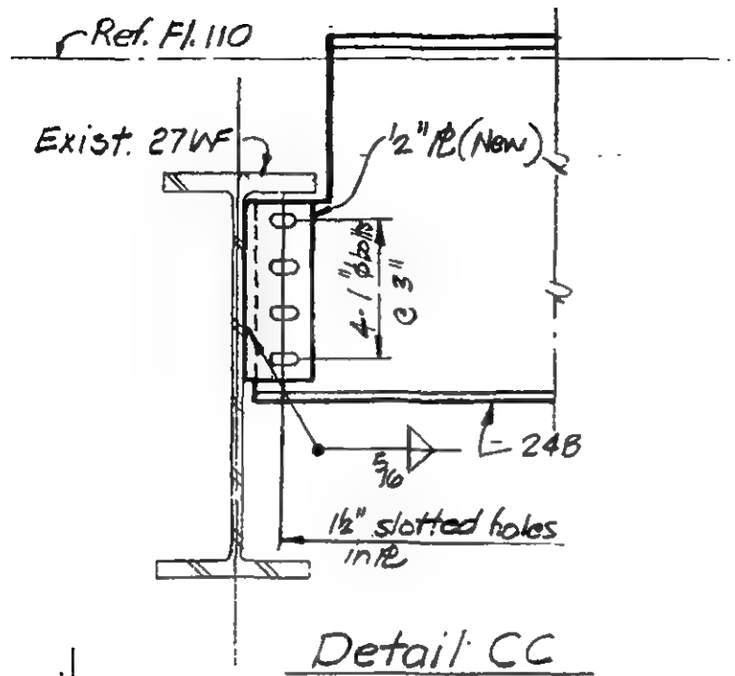

Detail CC

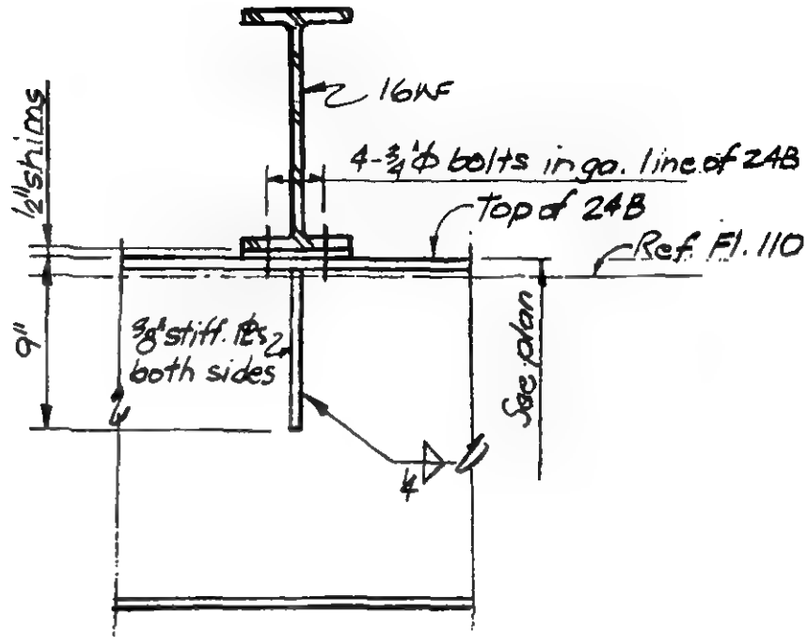

Detail DD

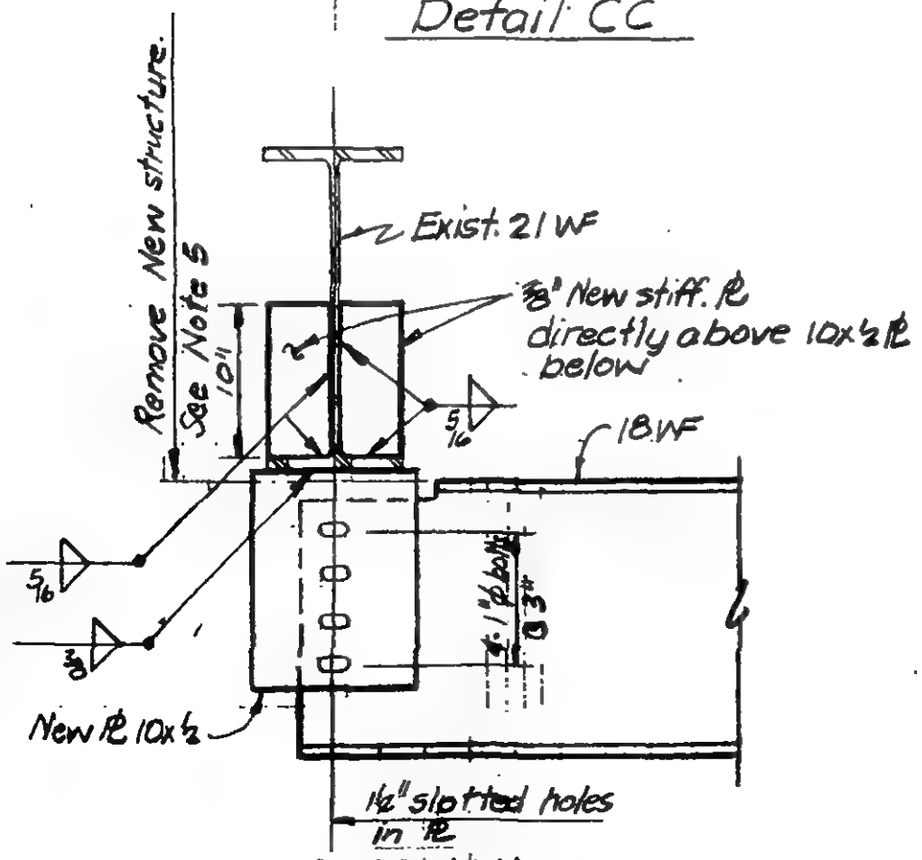

Detail EE

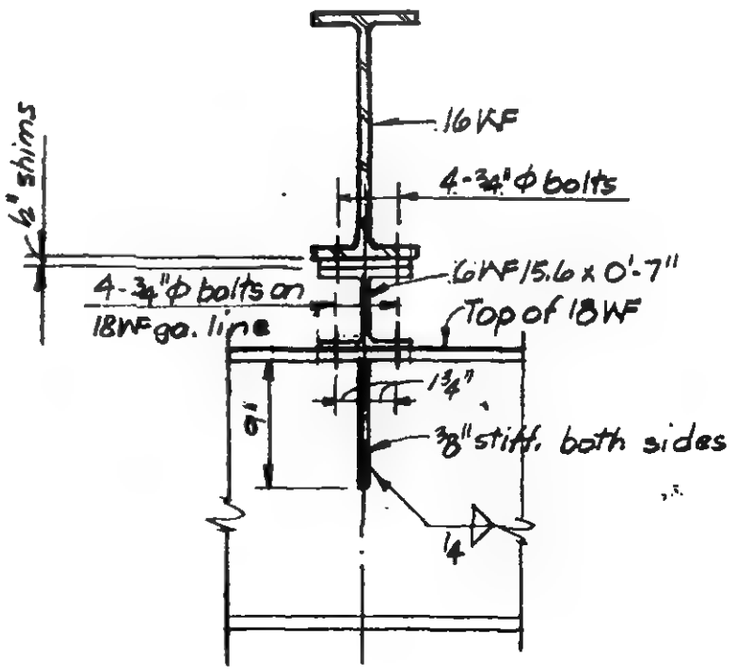

Detail FF

LICENSED PROFESSIONAL ENGINEER — LESLIE E. ROBERTSON — No. 34360 — UNIVERSITY OF THE STATE OF NEW YORK

DESIGNED: M. Ramani
DRAWN: P.M. Orelli
REVIEWED: L.E. Robertson

19-B-1108.21

SKILLING, HELLE, CHRISTIANSEN, ROBERTSON — Structural & Civil Engineers

PROJECT: THE WORLD TRADE CENTER | TITLE: TEMPORARY RELOCATION OF ELEV. 50 MACHINE | DATE: 2-28-72

REVISIONS

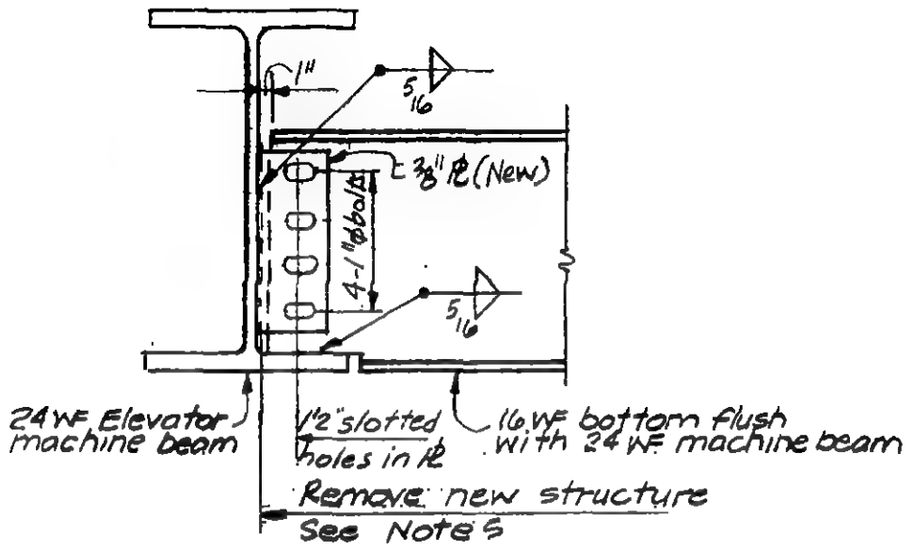

Detail G G

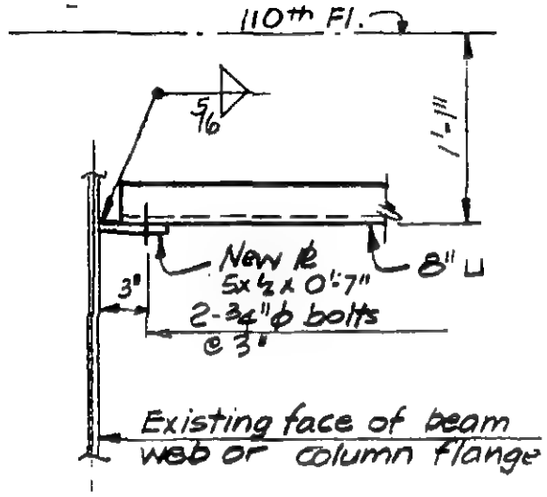

Detail H H

LICENSED PROFESSIONAL ENGINEER
LESLIE E. ROBERTSON
No. 34980
UNIVERSITY OF THE STATE OF NEW YORK

DESIGNED M. Ramani

DRAWN P.M. Orelli

REVIEWED L.E. Brewer

19-B-1108.22

SKILLING, HELLE, CHRISTIANSEN, ROBERTSON — Structural & Civil Engineers

PROJECT THE WORLD TRADE CENTER | TITLE STRAP ANCHORS-KEY PLANS-EL. 264 TOWER B | DATE 1-25-72

REVISIONS

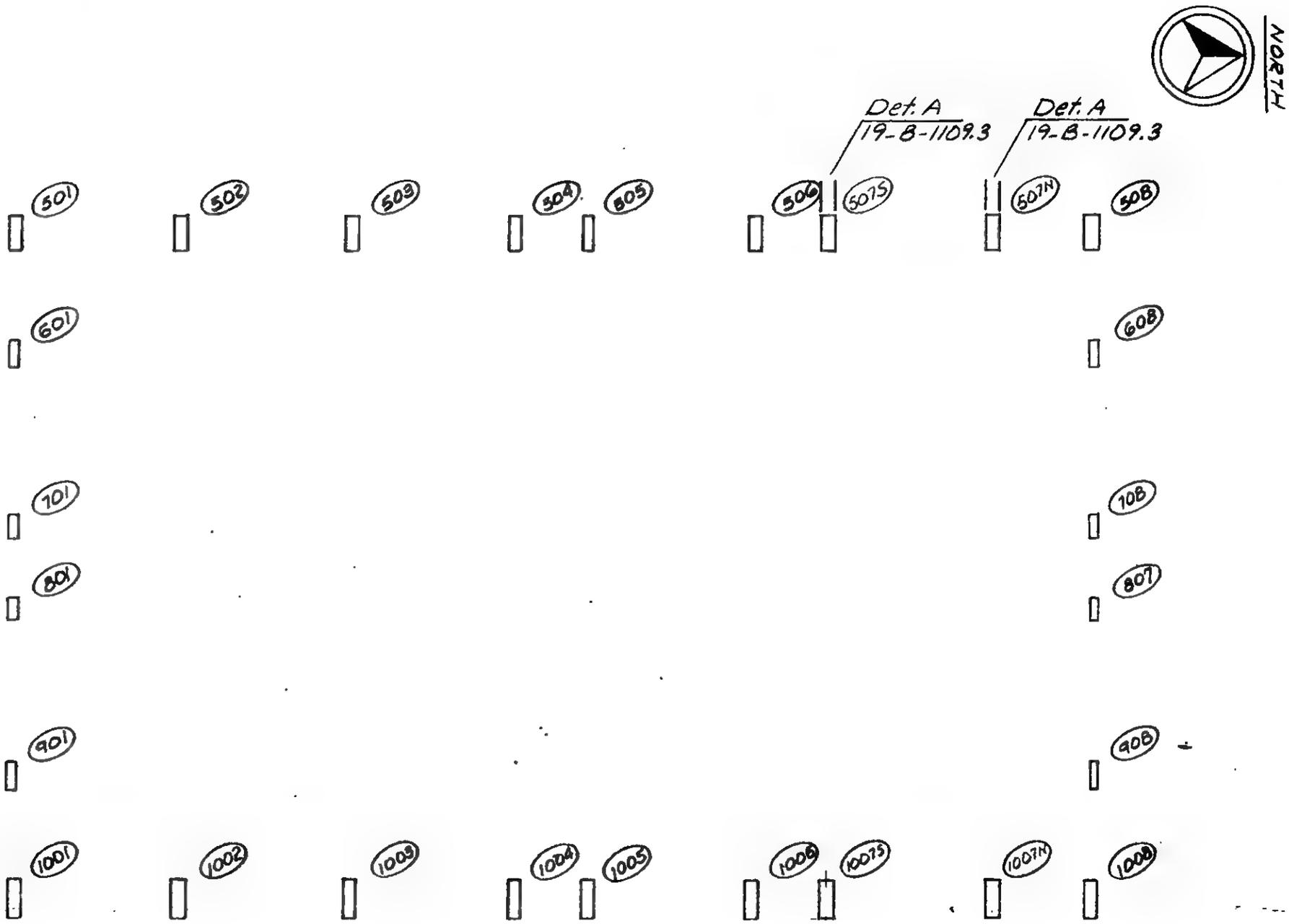

LICENSED PROFESSIONAL ENGINEER
LESLIE E. ROBERTSON
No. 34960
UNIVERSITY OF THE STATE OF NEW YORK

DESIGNED

DRAWN

REVIEWED

19-B-1109.1

SKILLING, HELLE, CHRISTIANSEN, ROBERTSON — Structural & Civil Engineers

PROJECT THE WORLD TRADE CENTER | TITLE STRAP ANCHORS-KEY PLANS-EL.274 TOWER B | DATE 1-25-72

REVISIONS

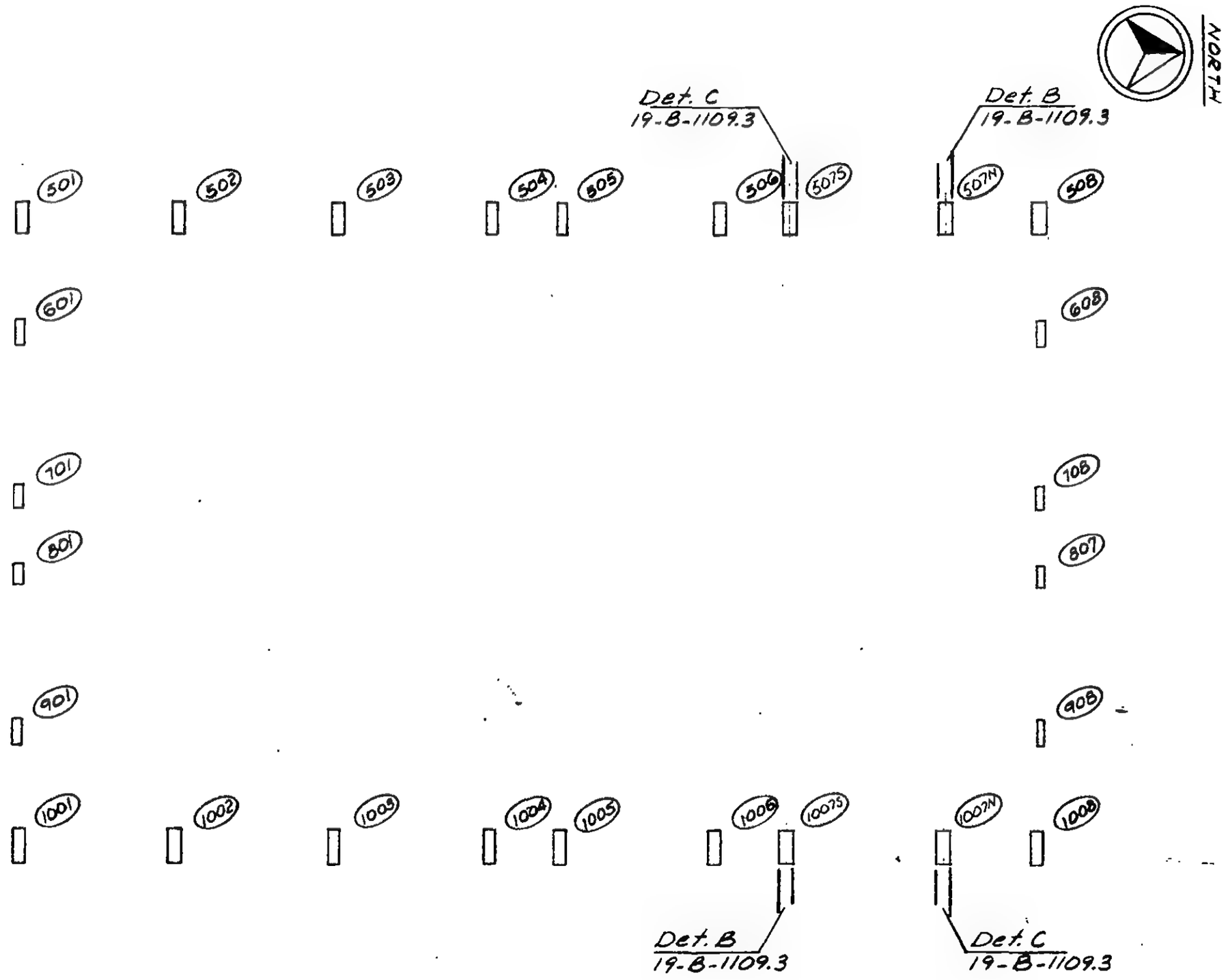

LICENSED PROFESSIONAL ENGINEER — LESLIE E. ROBERTSON — No. 34360 — UNIVERSITY OF THE STATE OF NEW YORK

DESIGNED

DRAWN

REVIEWED MJ Brower

19-B-1109.2

SKILLING, HELLE, CHRISTIANSEN, ROBERTSON — Structural & Civil Engineers

PROJECT: THE WORLD TRADE CENTER

TITLE: STRAP ANCHOR DETAILS EL. 264 & 274 TOWER B

DATE: 1-25-72

REVISIONS

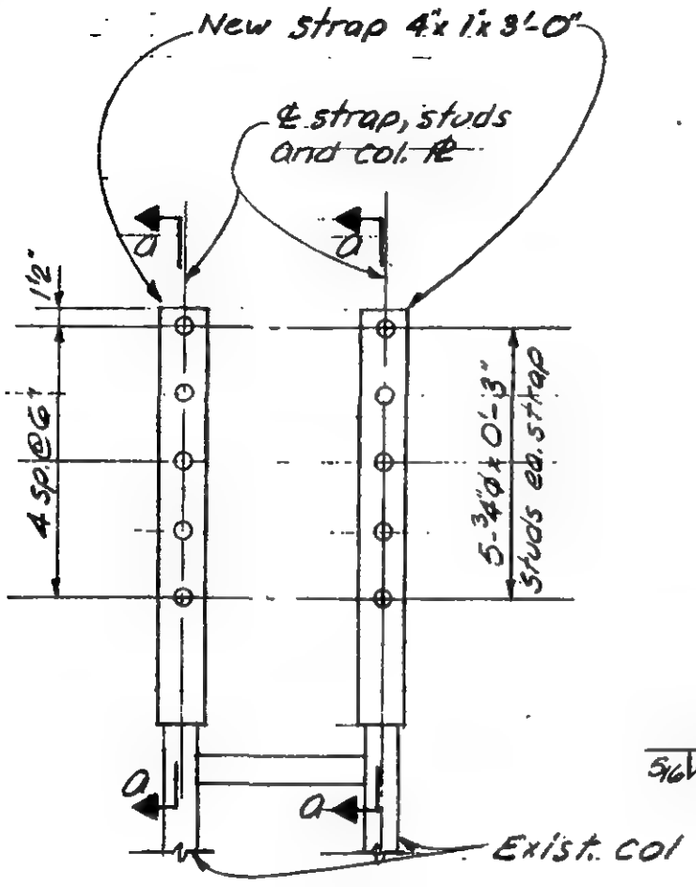

Detail A

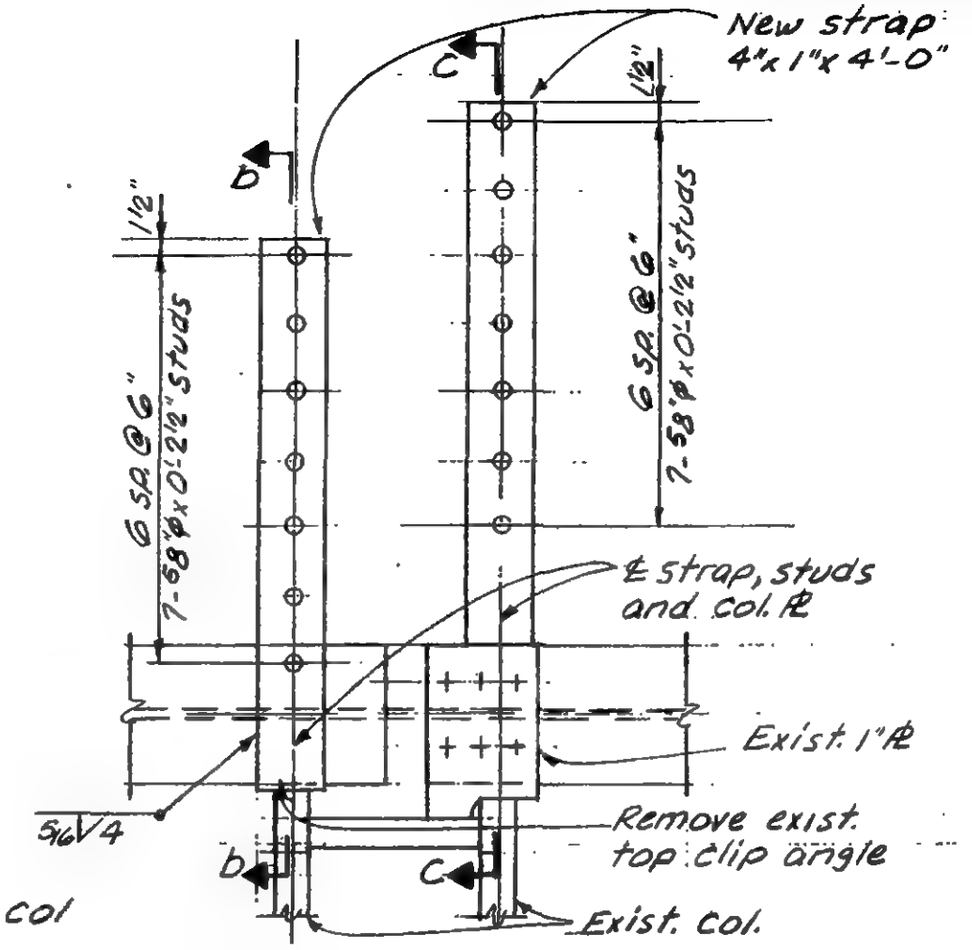

Detail B

Detail C opp. hand

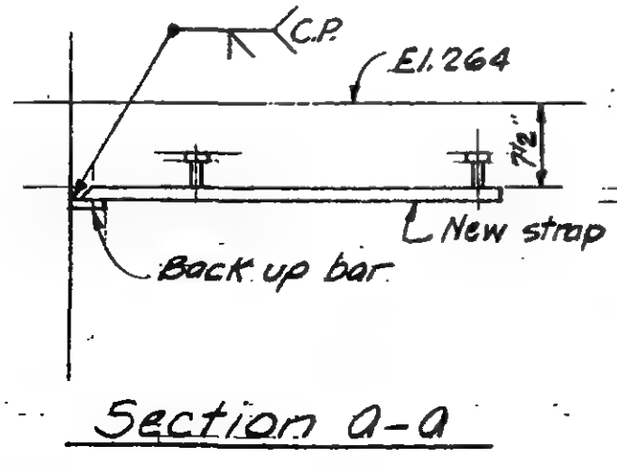

Section a-a

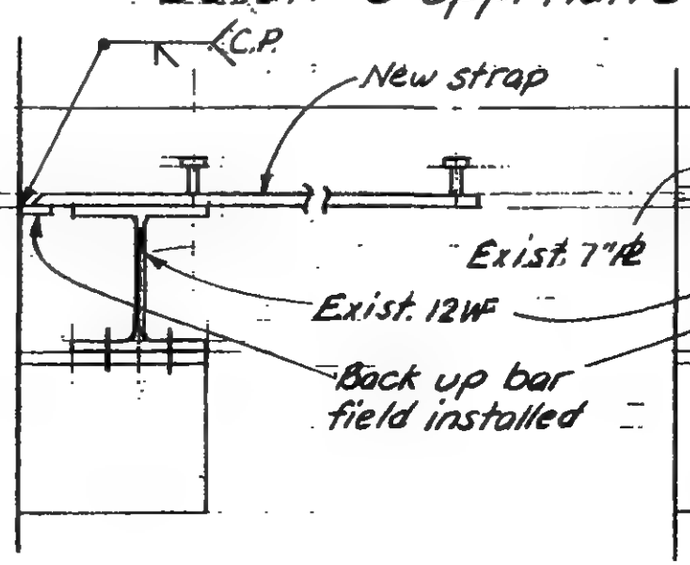

Section b-b

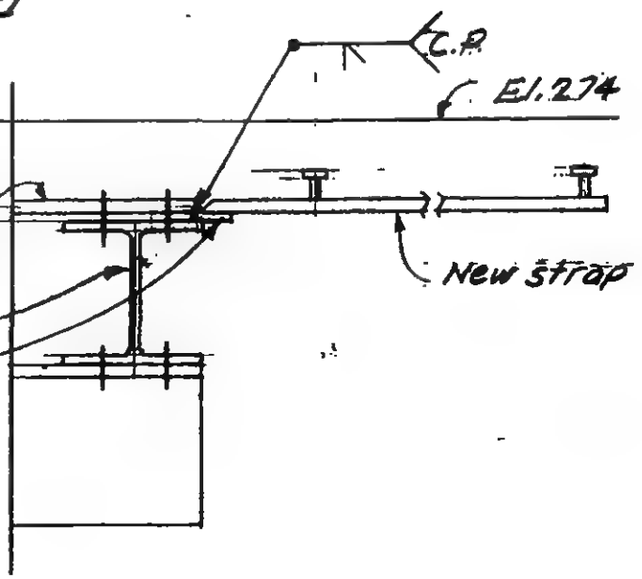

Section C-C

LICENSED PROFESSIONAL ENGINEER · LESLIE E. ROBERTSON · No. 34360 · UNIVERSITY OF THE STATE OF NEW YORK

DESIGNED: WAB

DRAWN: ALF

REVIEWED: LER Brown

19-B-1109.3

SKILLING, HELLE, CHRISTIANSEN, ROBERTSON — Structural & Civil Engineers

PROJECT: THE WORLD TRADE CENTER | TITLE: TEMPORARY DETAIL AT BASE @ TOWER B - COL. 607 & 907 | DATE: 1-25-72

REVISIONS

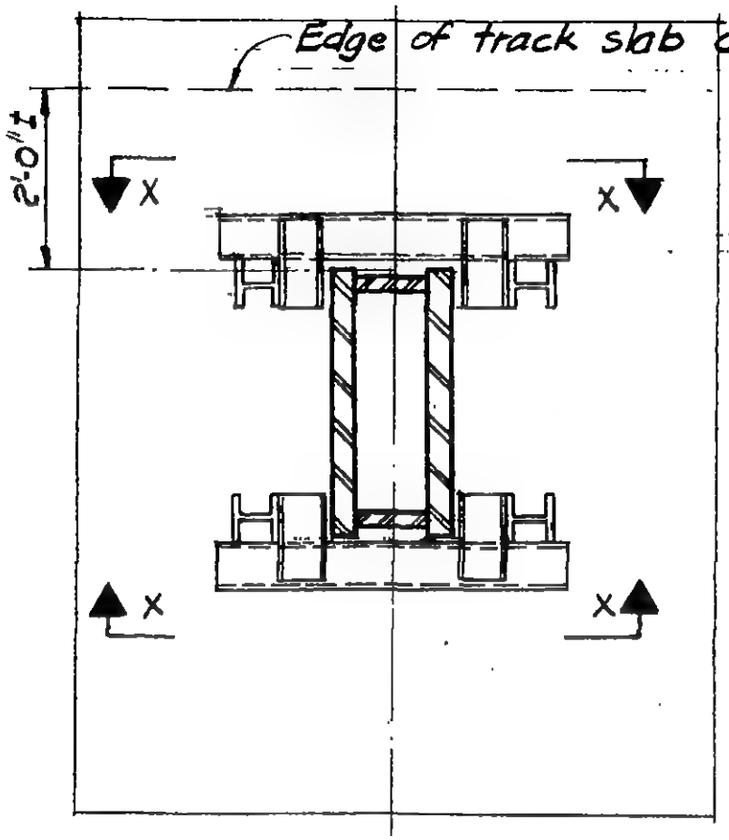

Plan at Base ℄
Col. 607B & 907B
½" = 1'-0"

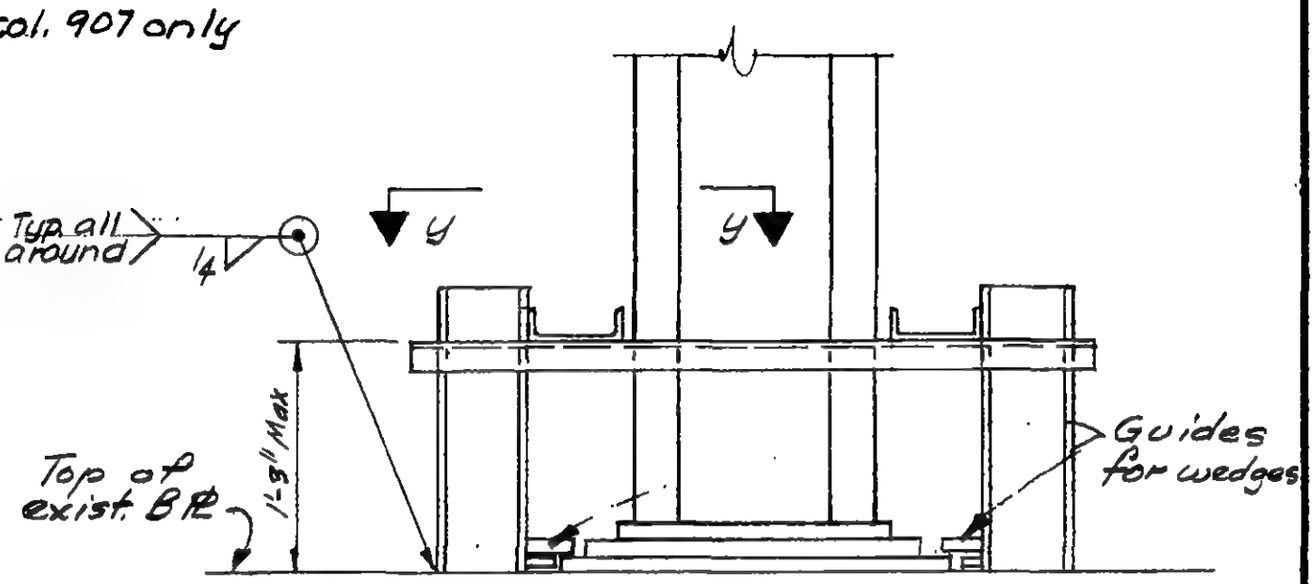

Section x-x
1" = 1'-0"

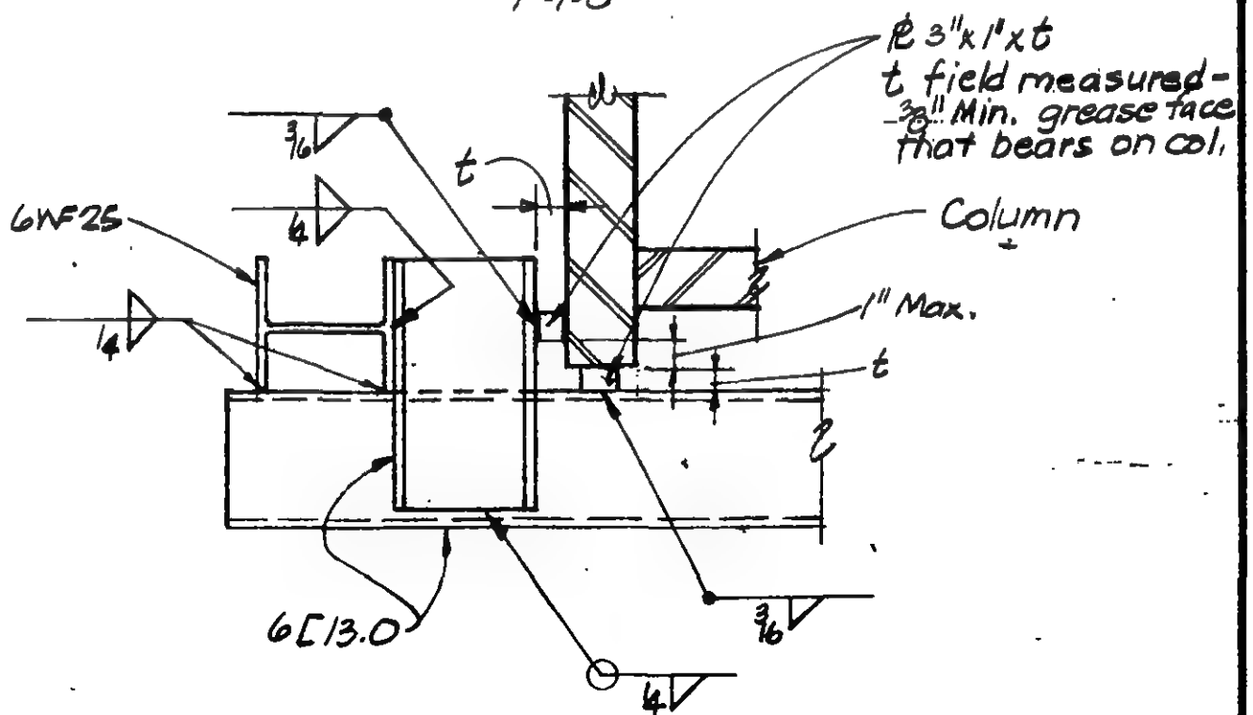

Section y-y
1½" = 1'-0"

LICENSED PROFESSIONAL ENGINEER — LESLIE E. ROBERTSON — No. 34360 — UNIVERSITY OF THE STATE OF NEW YORK

DESIGNED

DRAWN P. Ordi

REVIEWED W. Brewer

19-B-1110

SKILLING, HELLE, CHRISTIANSEN, ROBERTSON — Structural & Civil Engineers

PROJECT: THE WORLD TRADE CENTER | TITLE: TEMPORARY BRACING TOWER B - EL. 277'-0" & 260'-9" | DATE: 1-25-72

REVISIONS

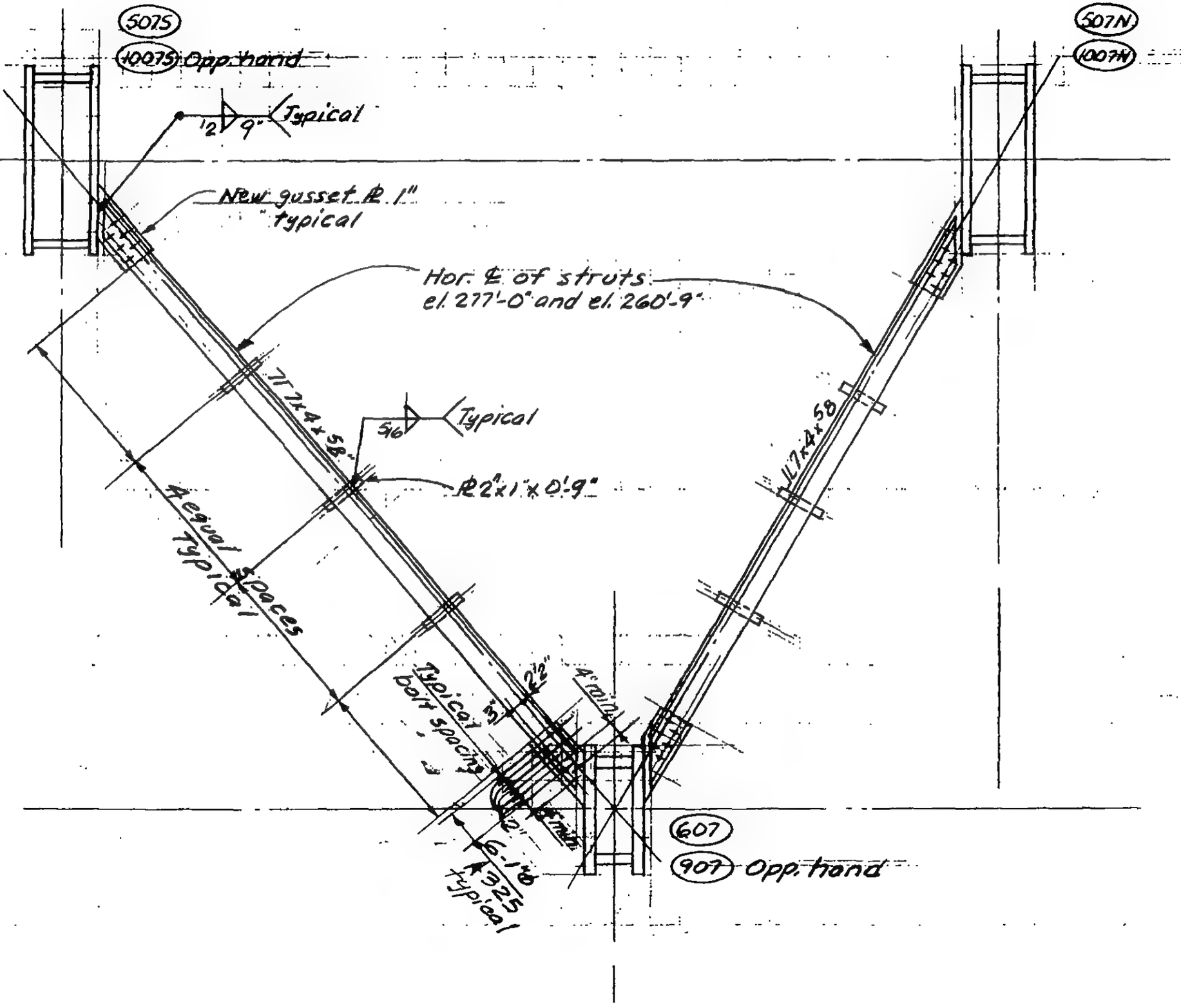

LICENSED PROFESSIONAL ENGINEER — LESLIE E. ROBERTSON — No. 34360 — UNIVERSITY OF THE STATE OF NEW YORK

DESIGNED

DRAWN A. Franqui

REVIEWED W Brewer

19-B-1111

SKILLING, HELLE, CHRISTIANSEN, ROBERTSON — Structural & Civil Engineers

PROJECT: THE WORLD TRADE CENTER | TITLE: TOWER B-FLOOR 106 PLAN | DATE: 3-3-72

REVISIONS

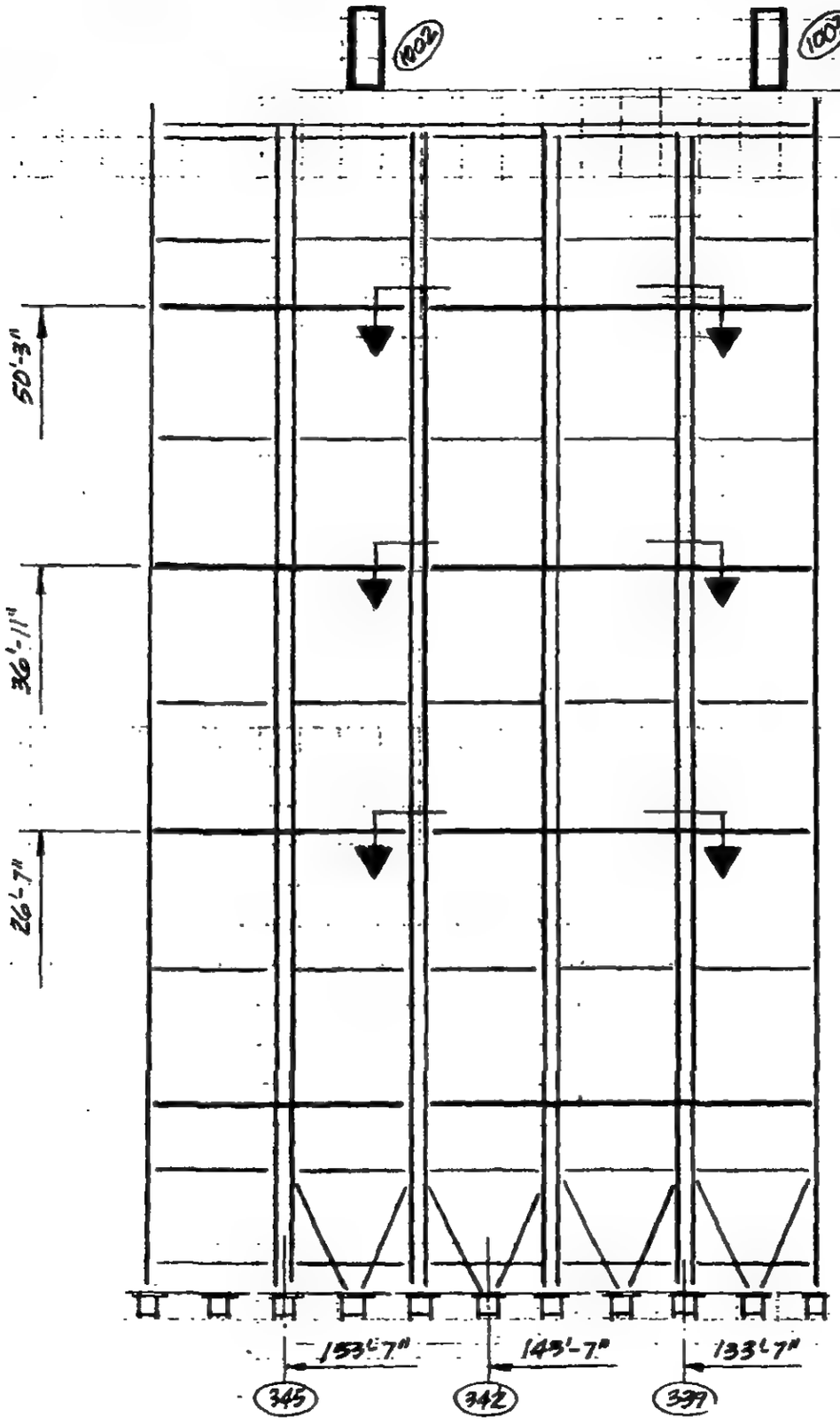

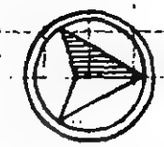

NOTES:

1. All work to be accomplished in accordance with project specification.
2. All new structural steel to be ASTM A36
3. All new welds to be made using E70xx. low hydrogen electrode.
4. Remove exist spray fireproofing as required to accomplish new work then replace on existing and fireproof new work.
5. ~~Where gap exists, increase~~ fillet weld size ~~by amount of gap.~~

DESIGNED

DRAWN PMOreli

REVIEWED

19-B-1112.1

SKILLING, HELLE, CHRISTIANSEN, ROBERTSON — Structural & Civil Engineers

PROJECT: THE WORLD TRADE CENTER | TITLE: TOWER 6 FLOOR 106 - SECTION | DATE: 3-3-72

REVISIONS

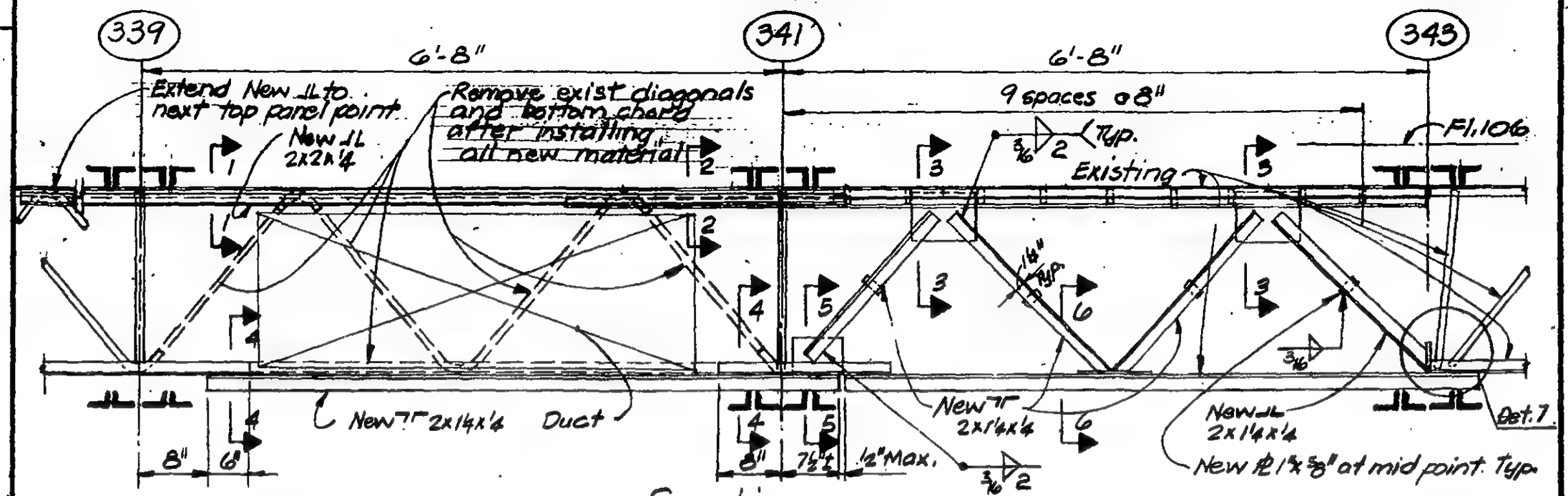

Section

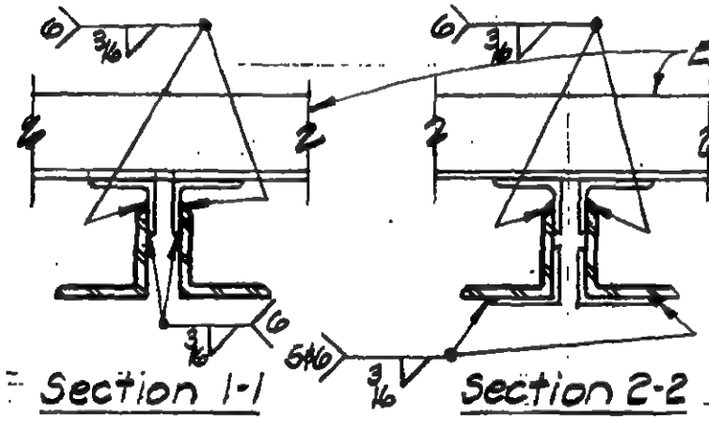

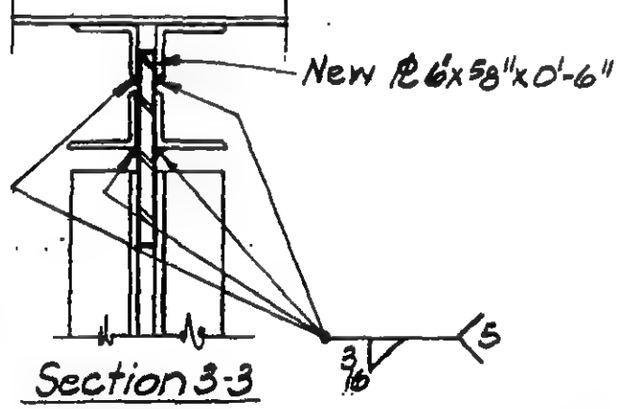

Note 6. 6" at ends then 3" @ 12".

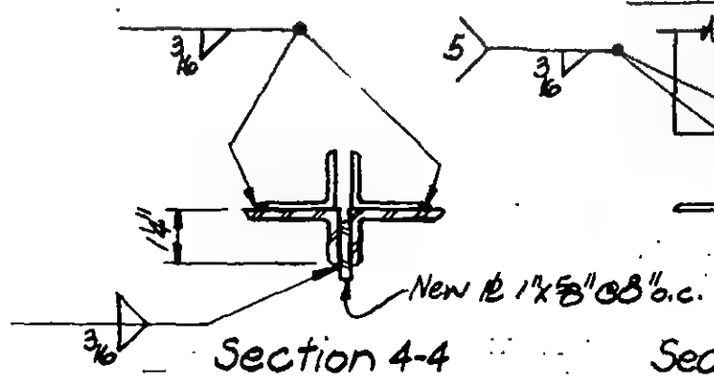

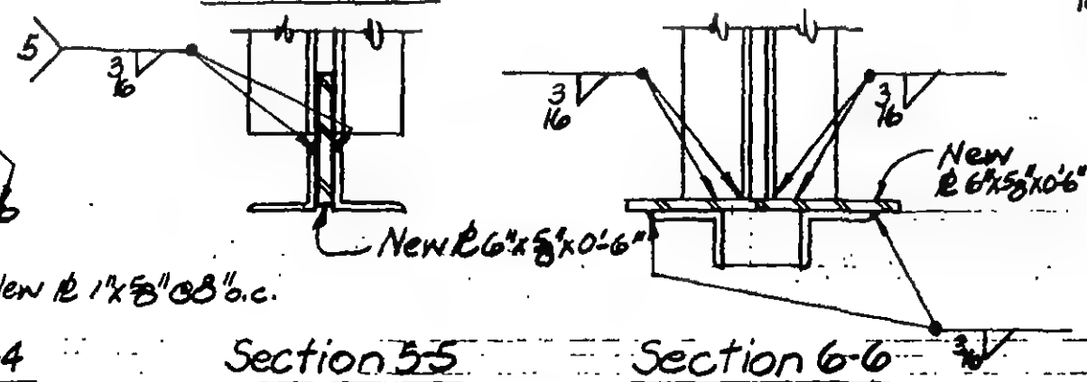

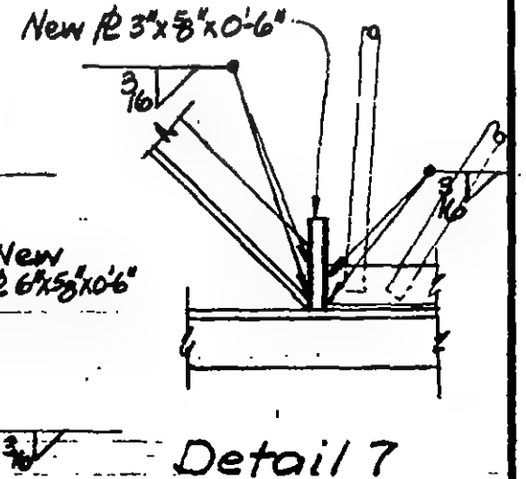

LICENSED PROFESSIONAL ENGINEER — LESLIE E. ROBERTSON — No 34360 — UNIVERSITY OF THE STATE OF NEW YORK

DESIGNED WAB

DRAWN PMO'Cali

REVIEWED

19-8-1112.2

SKILLING, HELLE, CHRISTIANSEN, ROBERTSON — Structural & Civil Engineers

PROJECT: THE WORLD TRADE CENTER | TITLE: WINDOW WASHER RAIL SUPPORT | DATE: 4-19-72

REVISIONS

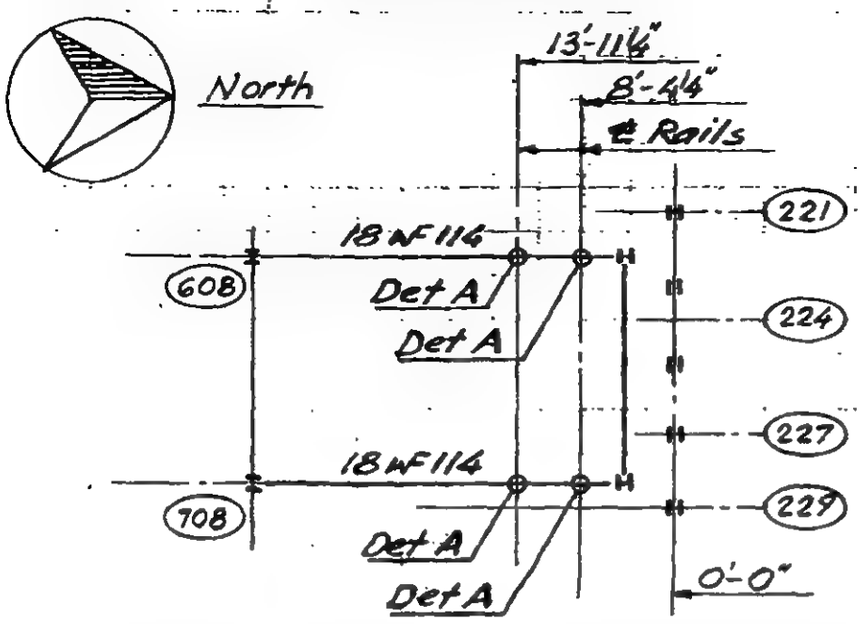

PART PLAN P.H. LOW ROOF

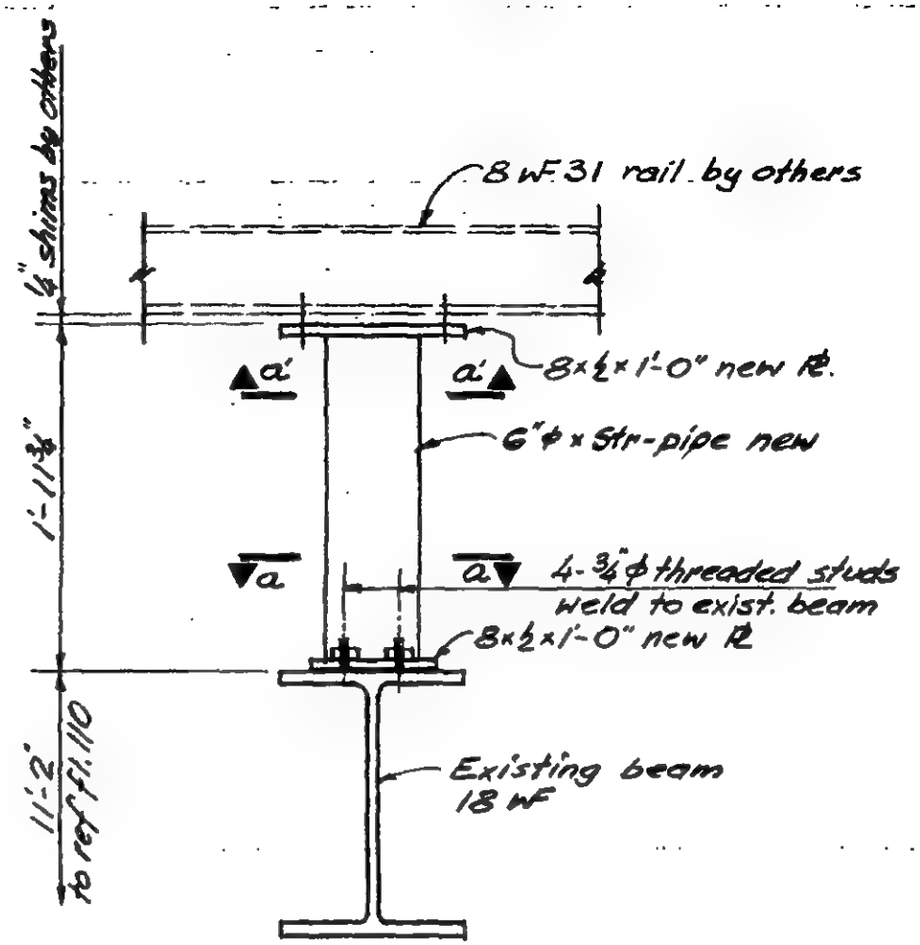

Detail A

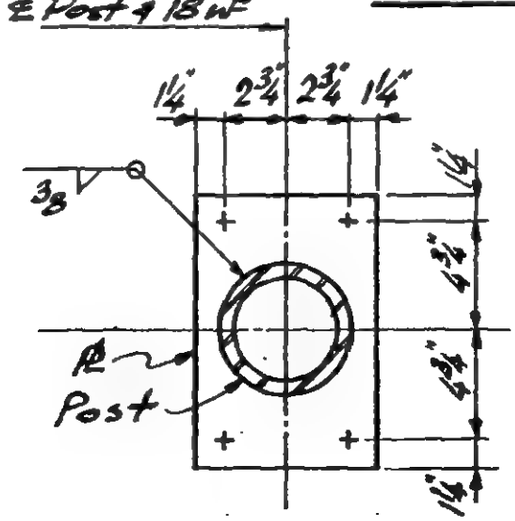

Section a-a

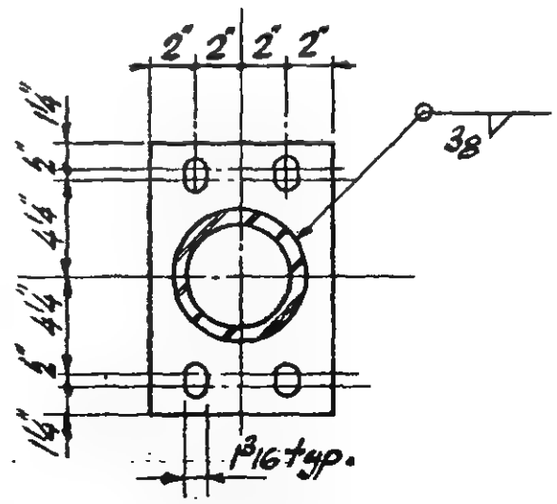

Section a'-a'

LICENSED PROFESSIONAL ENGINEER — LESLIE E. ROBERTSON — No. 34360 — UNIVERSITY OF THE STATE OF NEW YORK

DESIGNED

DRAWN

REVIEWED

19-B-1113

SKILLING, HELLE, CHRISTIANSEN, ROBERTSON — Structural & Civil Engineers

PROJECT: THE WORLD TRADE CENTER | TITLE: TOWER B - FLOOR 10 NEW SLAB OPENING | DATE: 4-20-72

REVISIONS

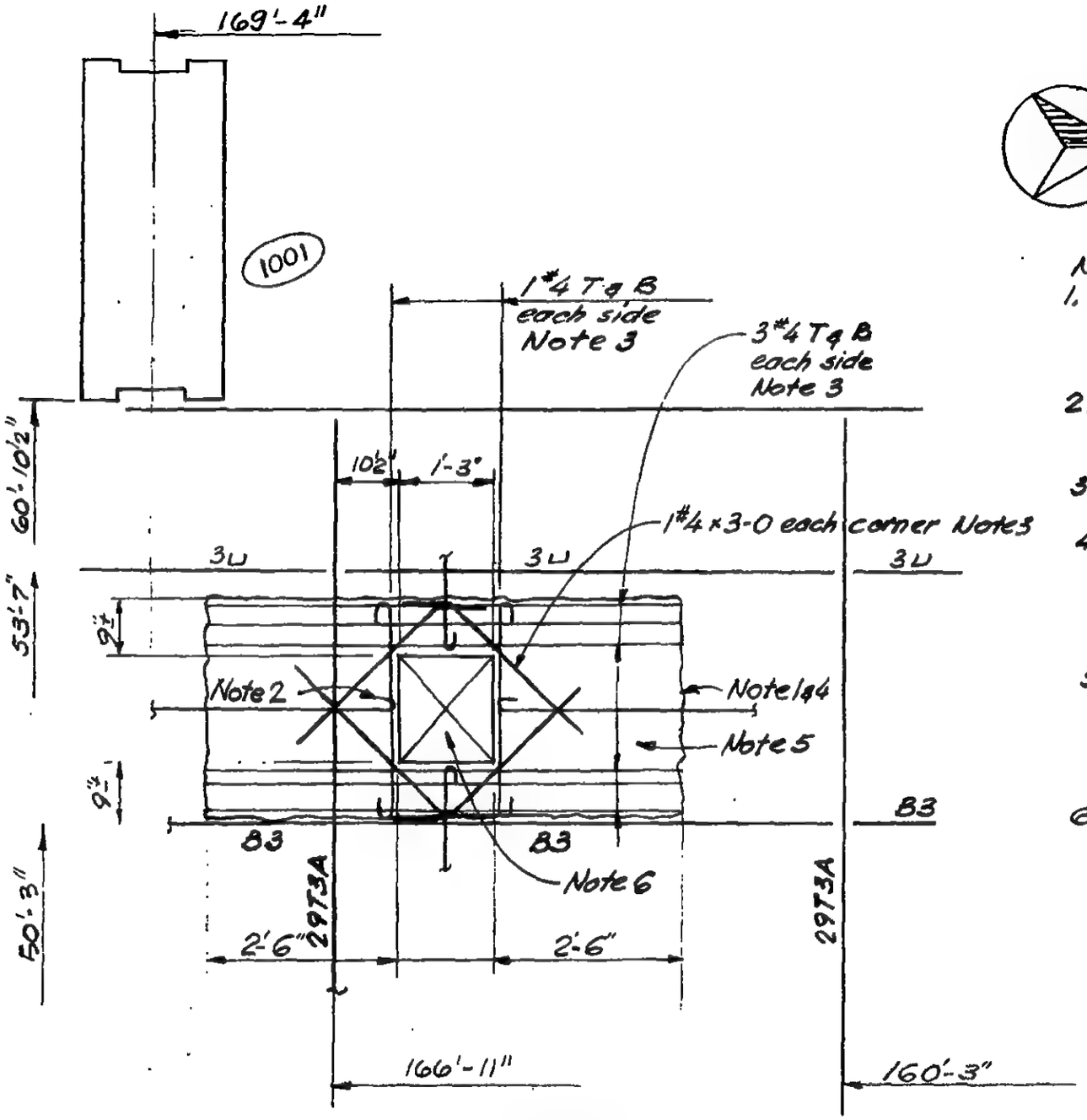

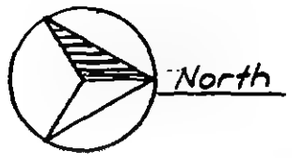

Notes:

1. Remove existing concrete to line indicated without damaging existing reinf. or exist. steel deck.
2. Cut existing reinf. and hook at edge of opening.
3. Add new reinf. as indicated
4. Clean face of exist. concrete and thoroughly coat entire surface with epoxy bonding compound.
5. Cast slab to edge of new opening using approved "non-shrink" f'c = 4000 psi concrete.
6. Remove steel deck after new concrete has been cast & cured.

Part Plan

See JBB drawing MB-23 Bull. B-152

LICENSED PROFESSIONAL ENGINEER — LESLIE E. ROBERTSON — No. 34360 — UNIVERSITY OF THE STATE OF NEW YORK

DESIGNED

DRAWN PMOrelli

REVIEWED

19-B-1114

File WTC 11700

SKILLING, HELLE, CHRISTIANSEN, ROBERTSON — Structural & Civil Engineers

PROJECT	TITLE	DATE
THE WORLD TRADE CENTER	TOWER B EL. 284 - NEW SLAB OPENING	6-12-72

REVISIONS

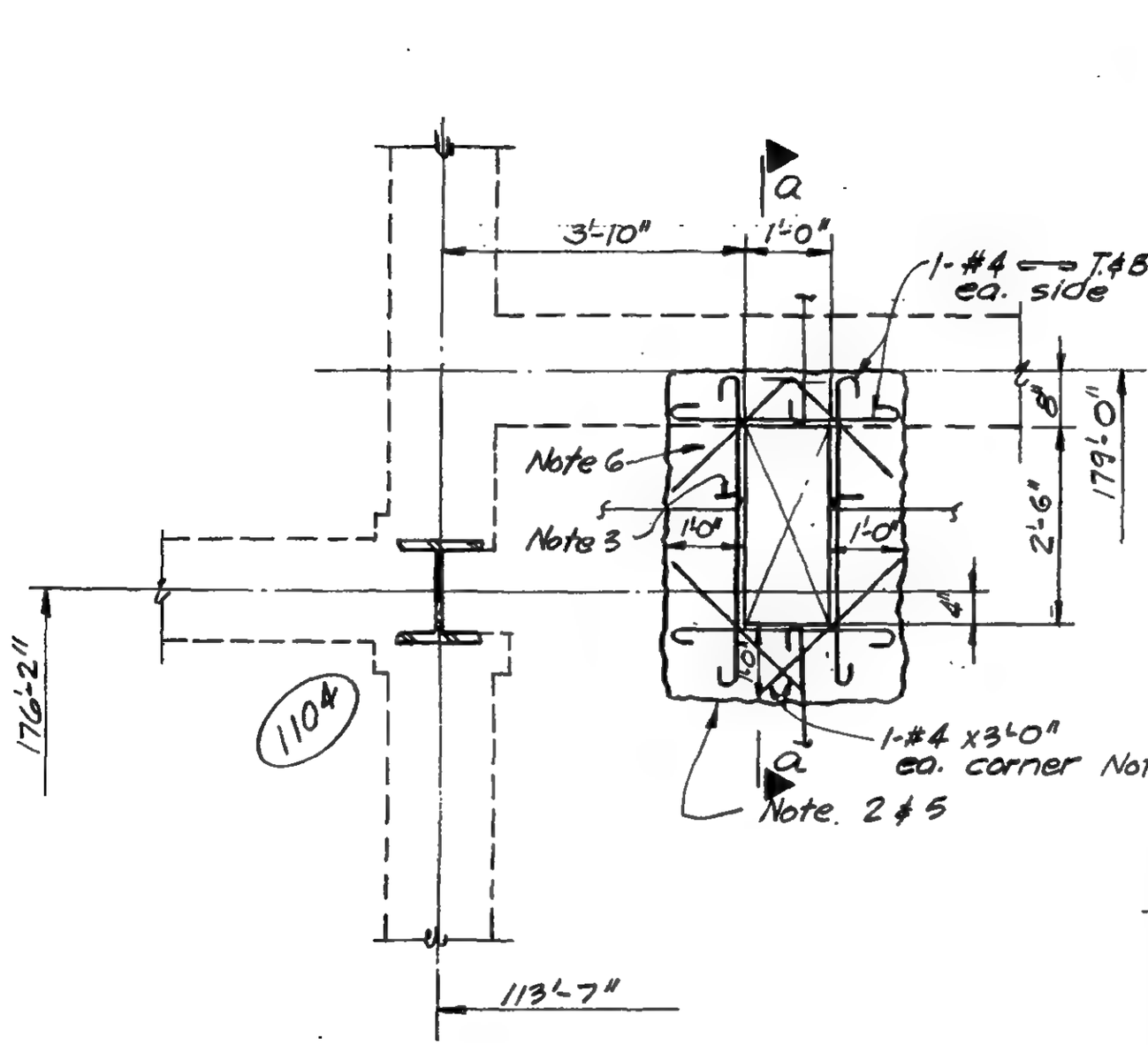

Part Plan

See M-B-10 dated 6-1-72 Bul. No. B-163

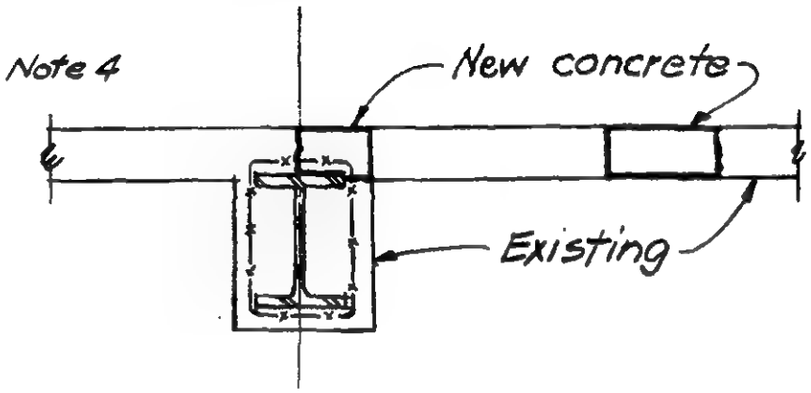

Section a-a

Notes:

1. Slabs to be shored as required before removing exist. concrete.
2. Remove existing concrete to line indicated without damaging existing reinf.
3. Cut existing reinf. and hook at edge of opening.
4. Add new reinf. as indicated.
5. Clean face of existing concrete and thoroughly coat entire surface with epoxy bonding compound.
6. Cast slab to edge of new opening using approved "non-shrink" f'c = 4000 psi concrete.

LICENSED PROFESSIONAL ENGINEER — LESLIE E. ROBERTSON — No. 34360 — UNIVERSITY OF THE STATE OF NEW YORK

DESIGNED

DRAWN P.M.Drake

REVIEWED

19-B-1115.1

File WTC 117.00

SKILLING, HELLE, CHRISTIANSEN, ROBERTSON — Structural & Civil Engineers

PROJECT THE WORLD TRADE CENTER | TITLE TOWER B. EL. 294 - NEW SLAB OPENING | DATE 6-12-72

REVISIONS

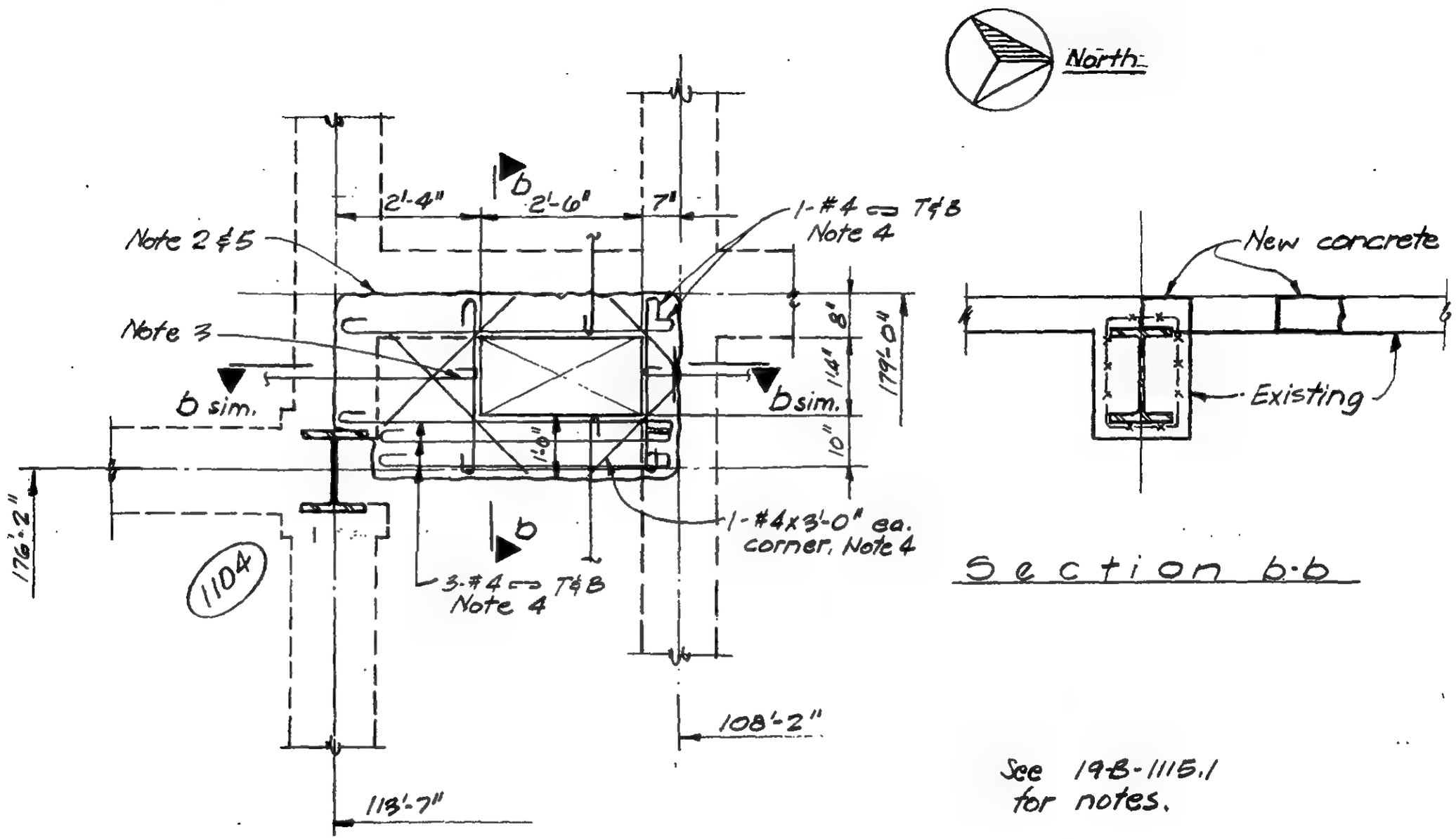

Section b-b

See 19-B-1115.1 for notes.

Part Plan

See M-B-11 dated 6-1-72 Bul. No B-163

LICENSED PROFESSIONAL ENGINEER LESLIE E. ROBERTSON No. 34360 UNIVERSITY OF THE STATE OF NEW YORK

DESIGNED

DRAWN PNOrdei

REVIEWED

19-B-1115.2

SKILLING, HELLE, CHRISTIANSEN, ROBERTSON — Structural & Civil Engineers

PROJECT: THE WORLD TRADE CENTER | TITLE: NEW OPENING PATH K-E | DATE: 6-5-72

REVISIONS

12-21-72

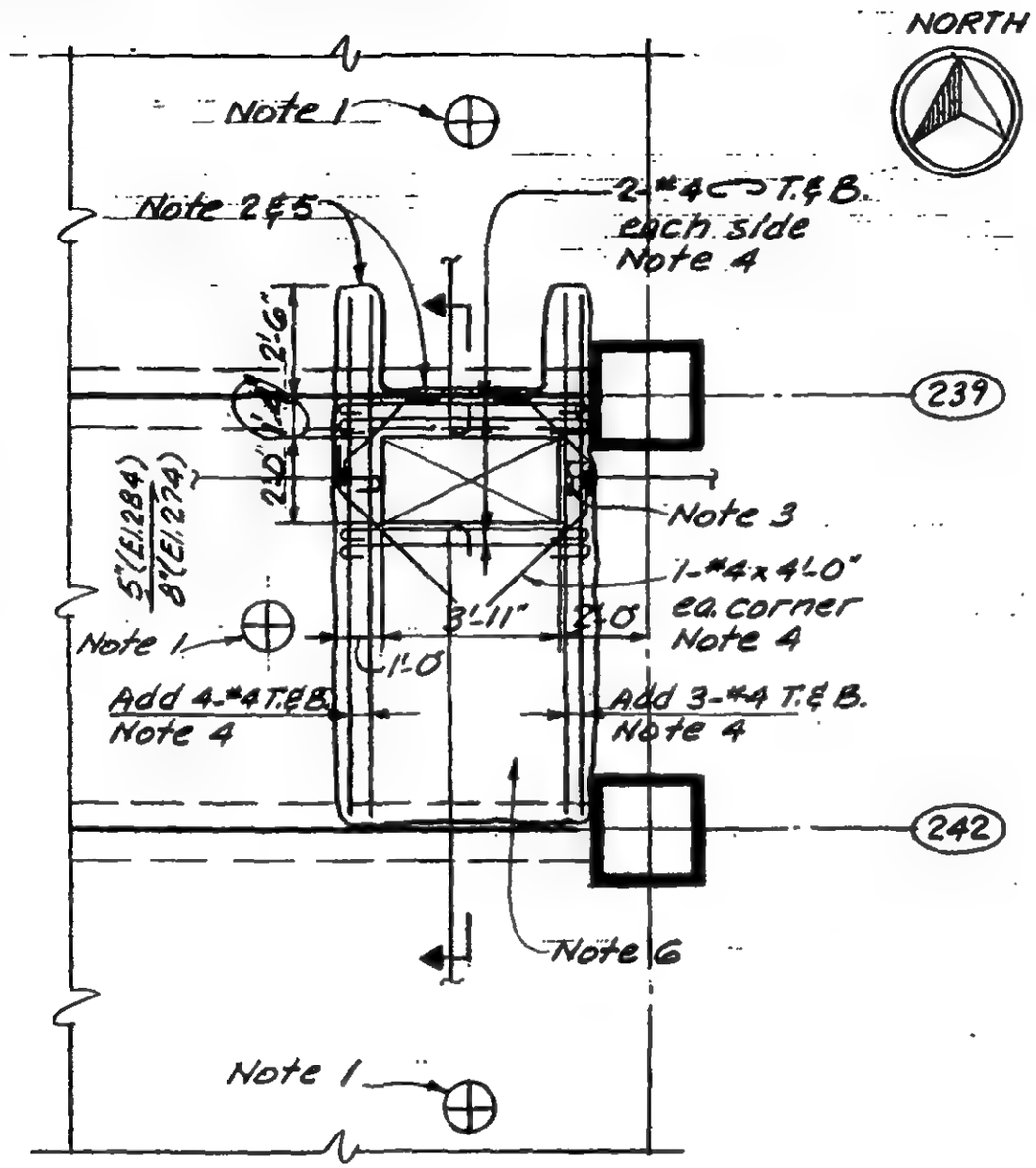

Part Plan El. 274 & 284

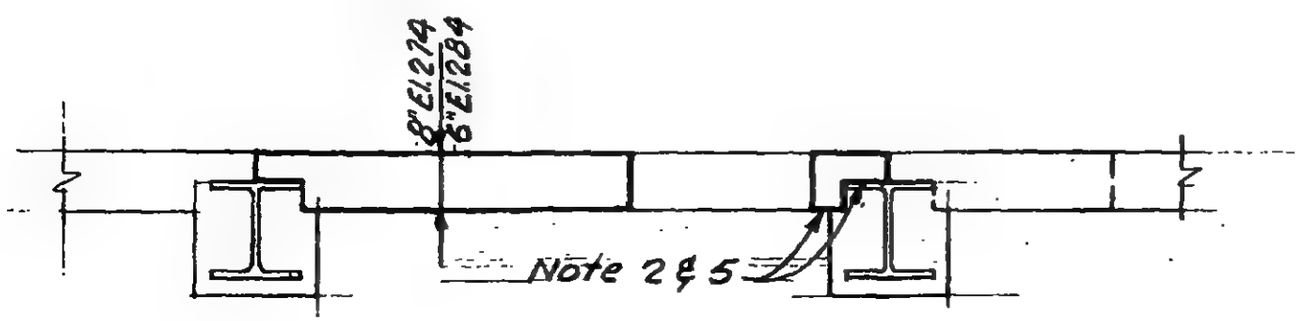

Section

Notes:

1. Slabs to be shored as required before removing exist. concrete.
2. Remove existing concrete to line indicated without damaging exist. reinf.
3. Cut exist. reinf. and hook at edge of opng.
4. Add new reinf. as indicated.
5. Clean face of exist. concrete and thoroughly coat entire surface with epoxy bonding compound.
6. Cast slab to edge of new opening using approved "non-shrink" f'c = 4000 psi concrete.

LICENSED PROFESSIONAL ENGINEER — LESLIE E. ROBERTSON — No. 34360 — UNIVERSITY OF THE STATE OF NEW YORK

DESIGNED: WAB

DRAWN: A. Franqui

REVIEWED:

19-AK-1116

SKILLING, HELLE, CHRISTIANSEN, ROBERTSON — Structural & Civil Engineers

PROJECT: THE WORLD TRADE CENTER | TITLE: NEW OPENINGS - PATH KE | DATE: 6-5-72

REVISIONS

12-21-72

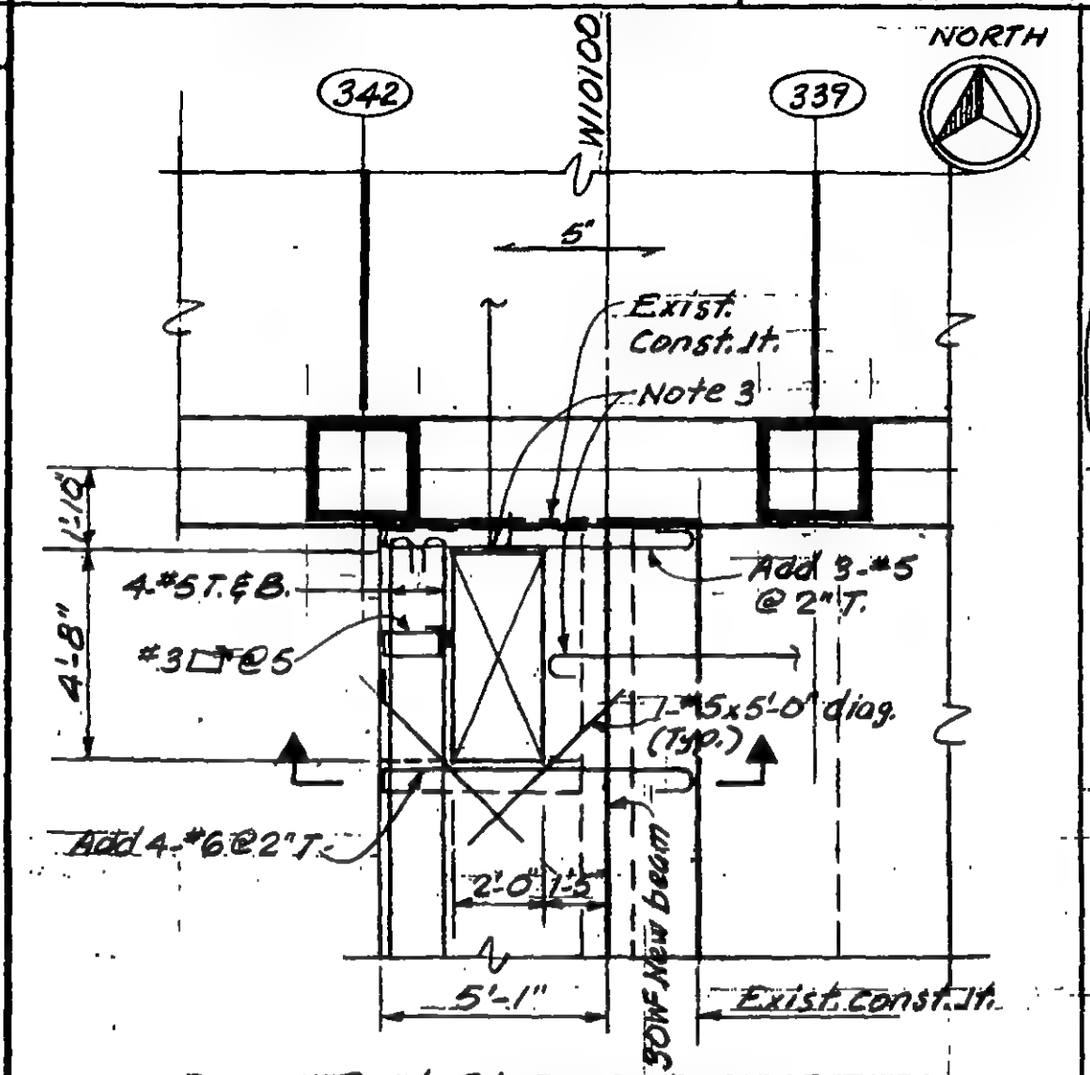

Part Plan El. 310

Opening to be installed in slab cast after new beam has been installed.

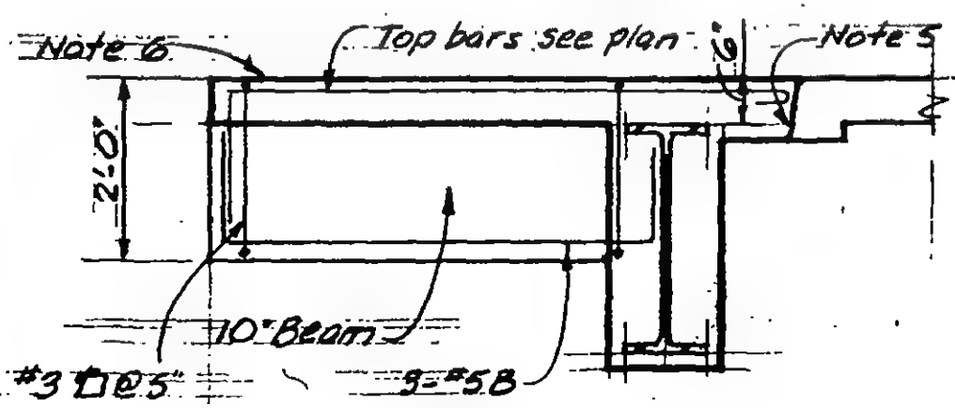

Section

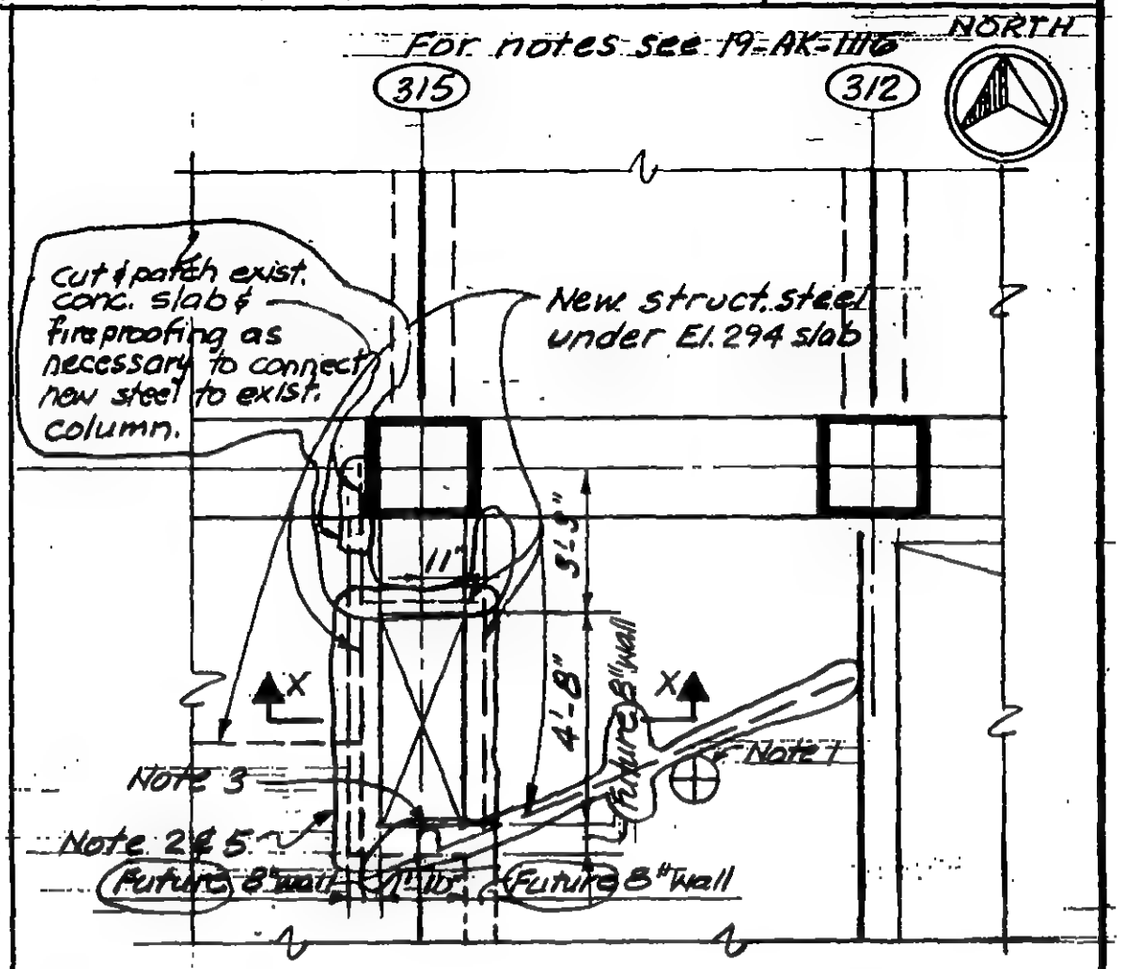

Part Plan El. 294

Opening shall be installed only after new structural steel under El. 294 slab has been installed.

See 19-AK-1117.2 & 3 for details of steel.

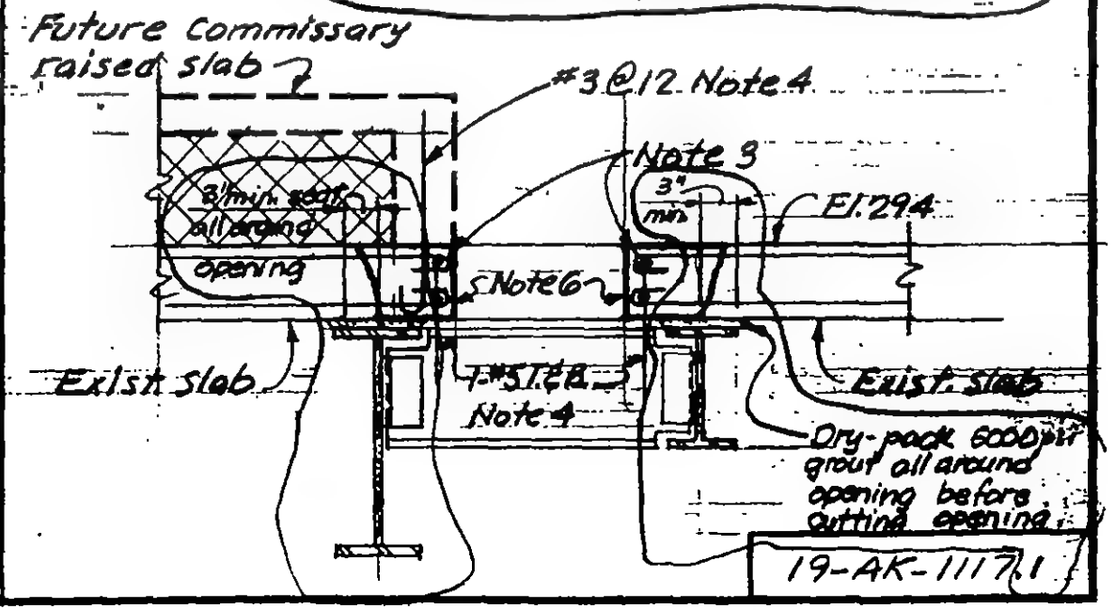

19-AK-1117.1

LICENSED PROFESSIONAL ENGINEER — LESLIE E. ROBERTSON — No. 34960 — UNIVERSITY OF THE STATE OF NEW YORK

DESIGNED: WAB

DRAWN: A. Franqui

REVIEWED:

SKILLING, HELLE, CHRISTIANSEN, ROBERTSON — Structural & Civil Engineers

PROJECT: THE WORLD TRADE CENTER | TITLE: NEW OPENINGS - PATH KE | DATE: 12-21-72

REVISIONS

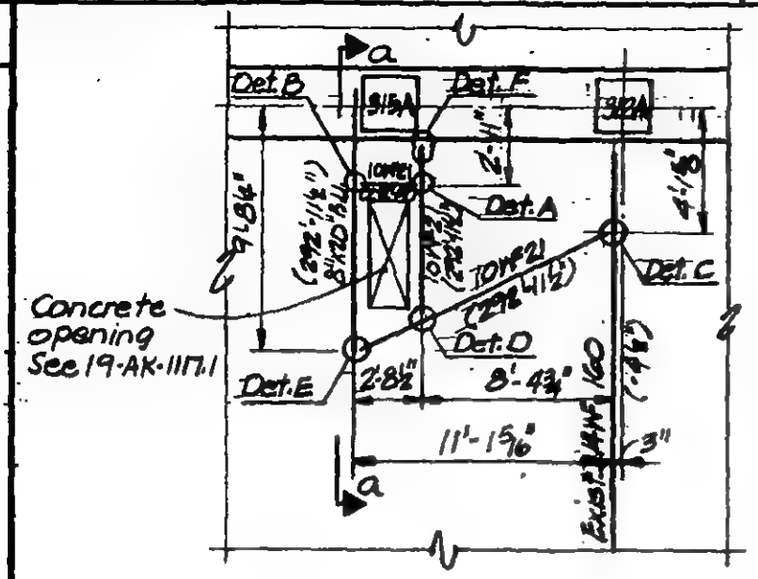

Part Plan - El. 294

NORTH

Notes:

1. Use proper preheat before welding on exist. col. & spandrel beam.
2. All welding E7018 (low hydrogen).
3. All steel A36.
4. Verify all field dimensions before fabrication.

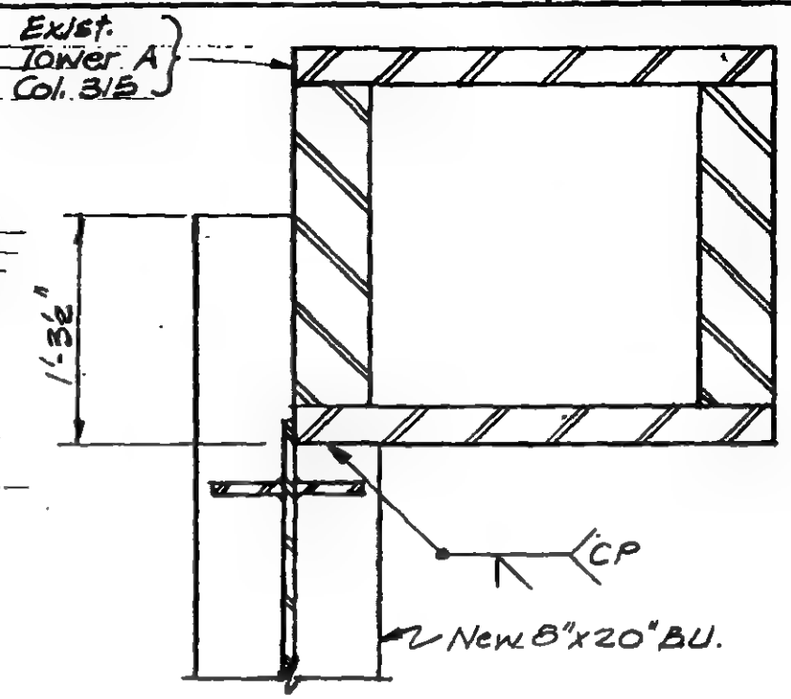

Section b-b

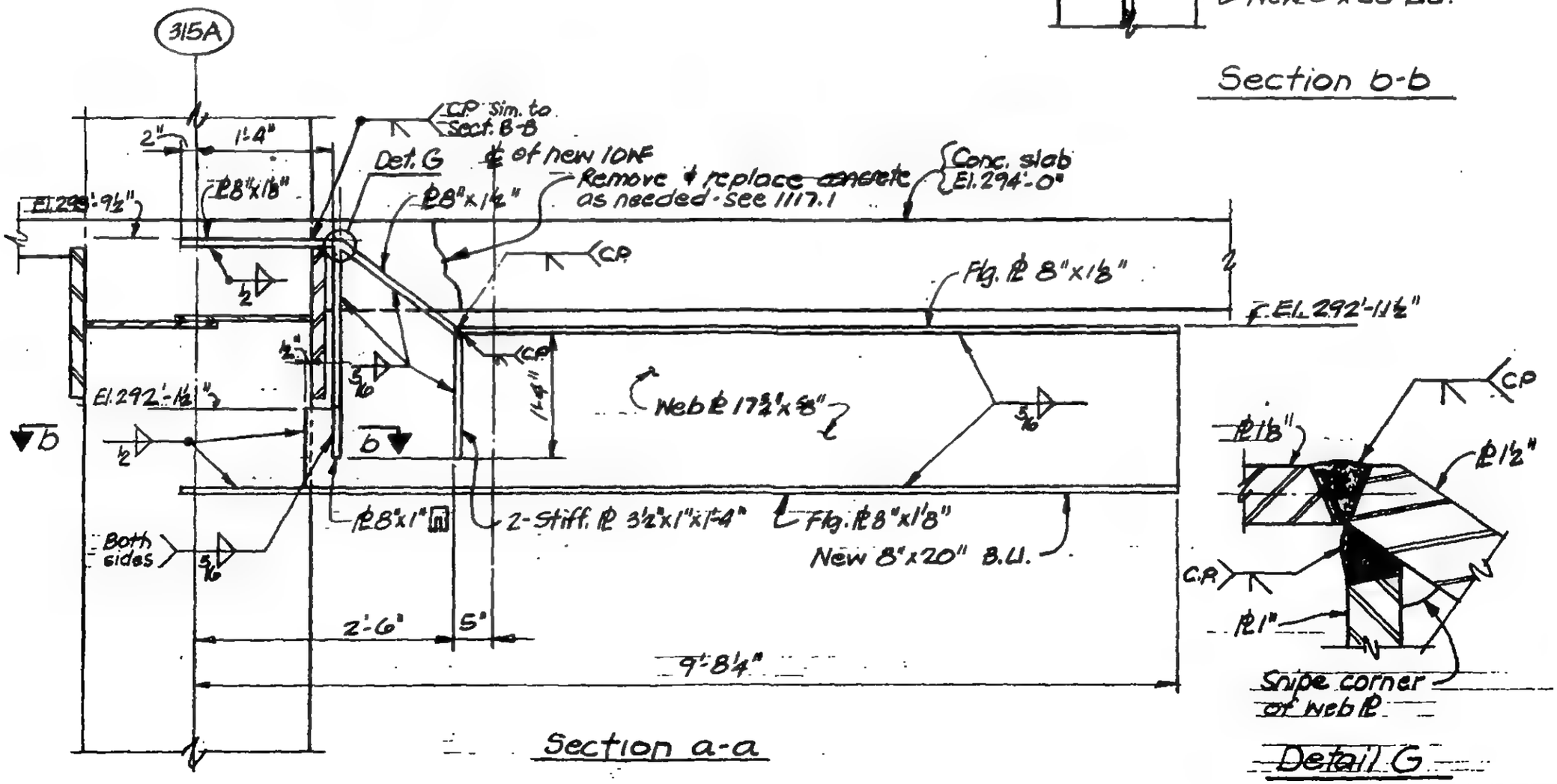

Section a-a

Detail G

LICENSED PROFESSIONAL ENGINEER — LESLIE E. ROBERTSON — No. 34360 — UNIVERSITY OF THE STATE OF NEW YORK

DESIGNED JTM
DRAWN
REVIEWED

19-AK-1117.2

SKILLING, HELLE, CHRISTIANSEN, ROBERTSON — Structural & Civil Engineers

PROJECT: THE WORLD TRADE CENTER | TITLE: NEW OPENINGS - PATH KE | DATE: 12-21-72

REVISIONS

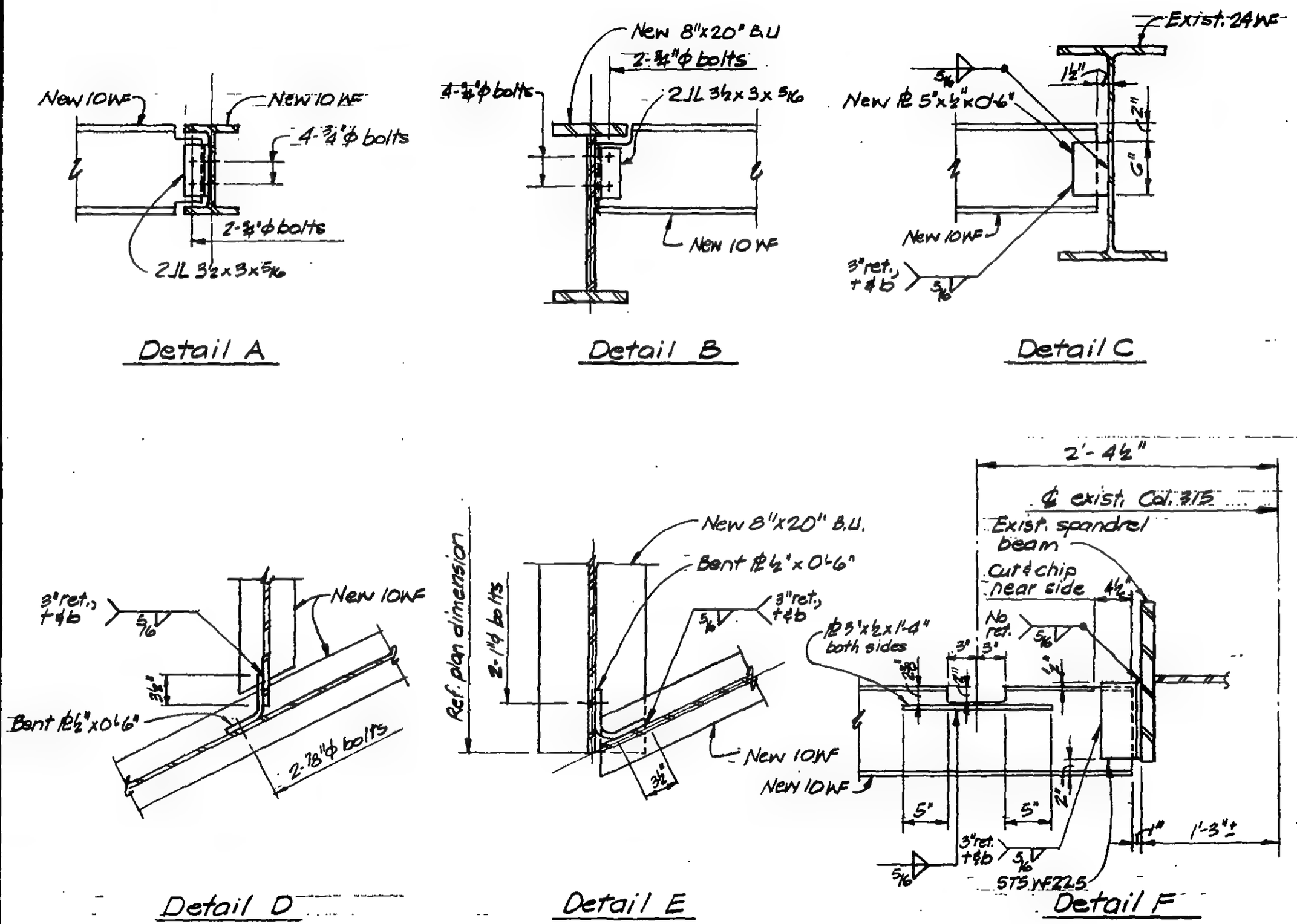

LICENSED PROFESSIONAL ENGINEER
LESLIE E. ROBERTSON
No 34360
UNIVERSITY OF THE STATE OF NEW YORK

DESIGNED: JTM

DRAWN: [signature]

REVIEWED

19-AK-1117.3

File WTC 117.00

SKILLING, HELLE, CHRISTIANSEN, ROBERTSON — Structural & Civil Engineers

PROJECT: THE WORLD TRADE CENTER | TITLE: NEW SLAB - TOWER A, FLOOR 48 | DATE: 5-5-72

REVISIONS

Notes:

1. Remove existing wall and spray fireproofing as required to construct new slab.
2. Clean face of existing concrete and thoroughly coat entire surface with epoxy bonding compound.

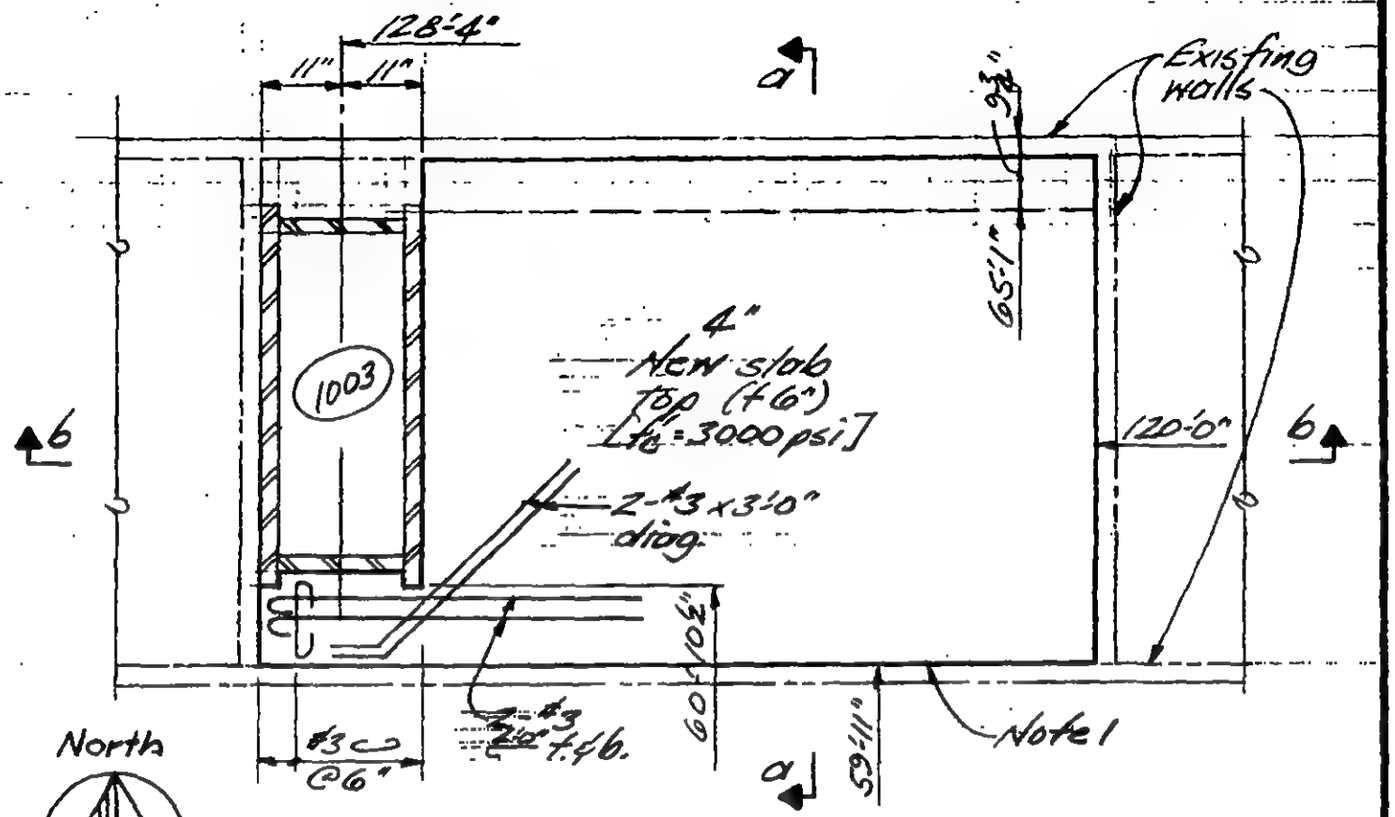

Part Plan - Tower A, Floor 48

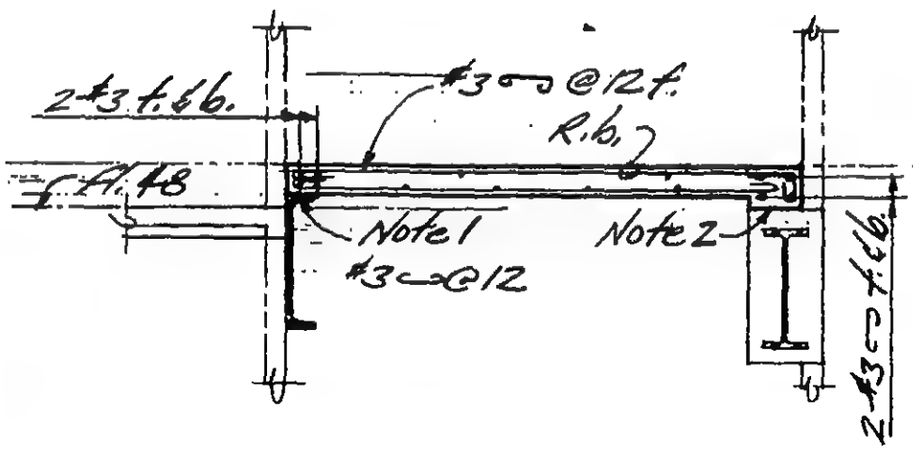

Section a-a

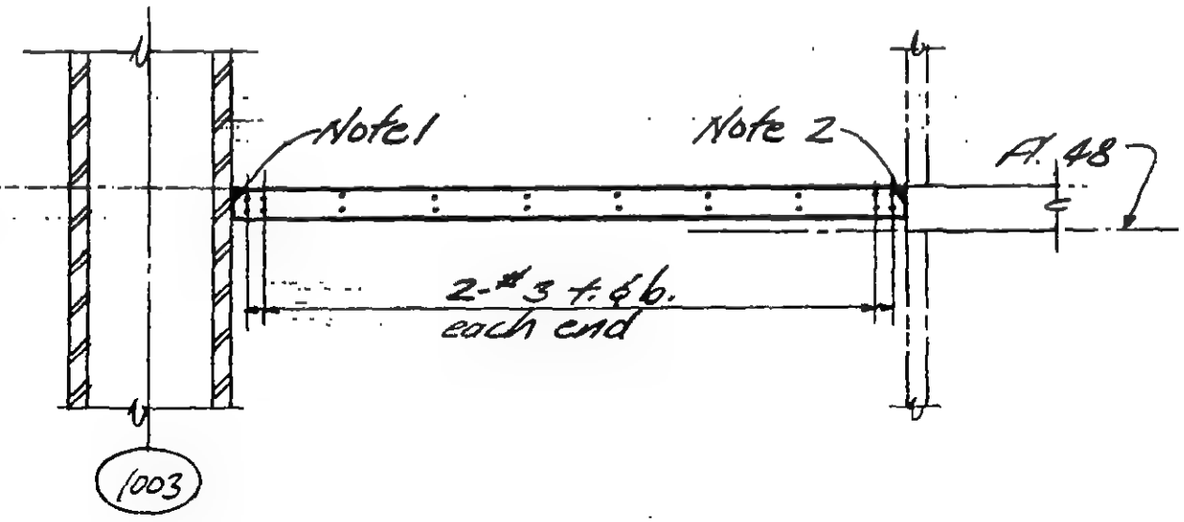

Section b-b

LICENSED PROFESSIONAL ENGINEER — LESLIE E. ROBERTSON — No. 34360 — UNIVERSITY OF THE STATE OF NEW YORK

DESIGNED

DRAWN

REVIEWED

19-A-1119

SKILLING, HELLE, CHRISTIANSEN, ROBERTSON — Structural & Civil Engineers

PROJECT: THE WORLD TRADE CENTER | TITLE: P.H. ROOF - UPPER PERIMETER BEAM | DATE: 6-23-72

REVISIONS

7-17-72

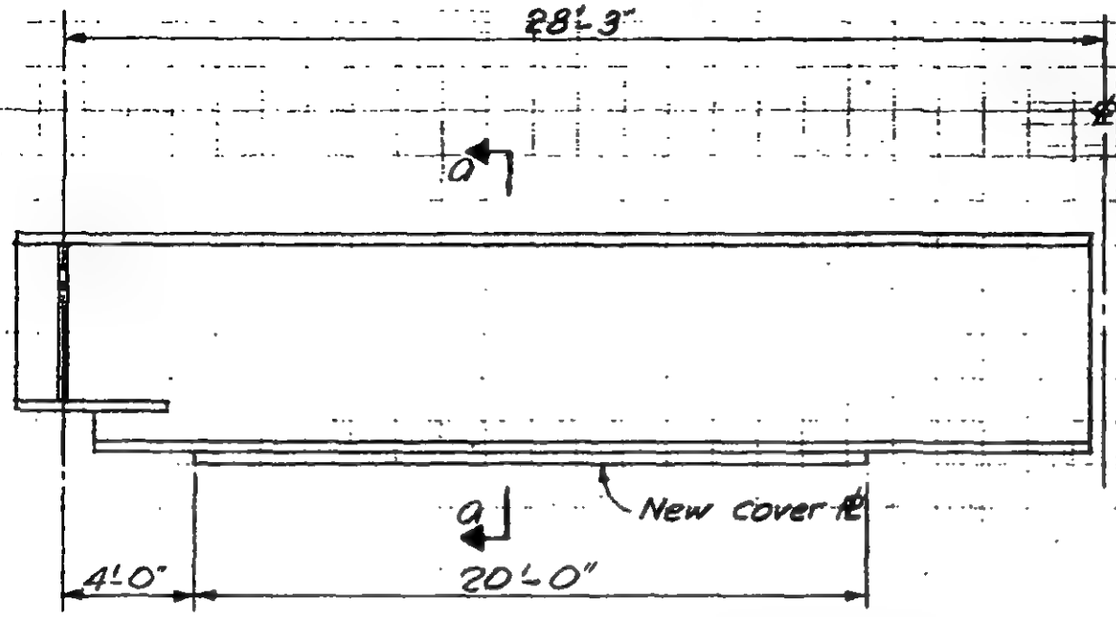

Beam No. 503 & 548 as marked on Shop Drawing.

Elevation A-A

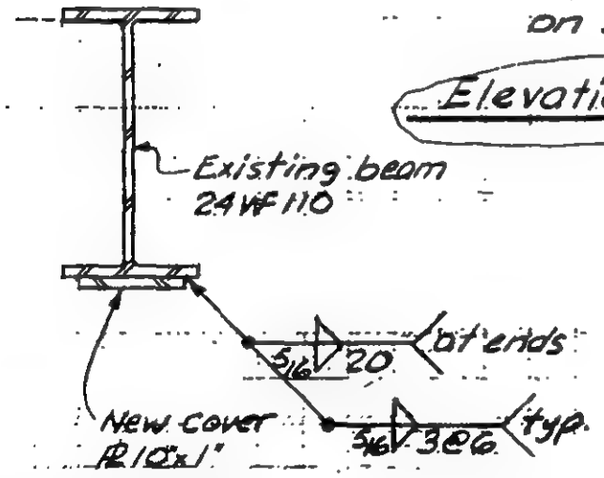

Section a-a

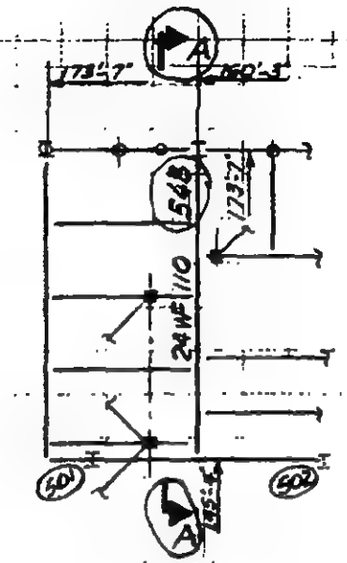

Part Plan

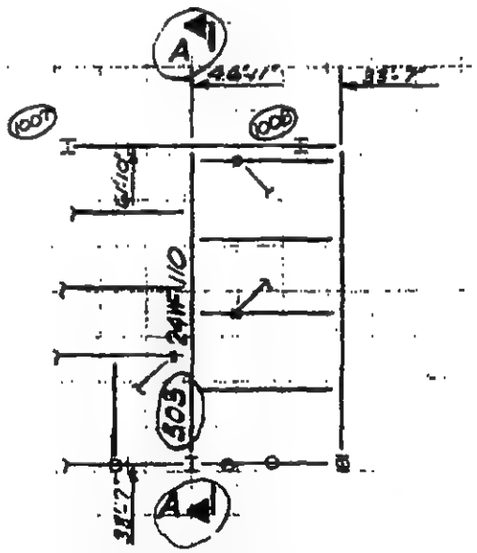

Part Plan

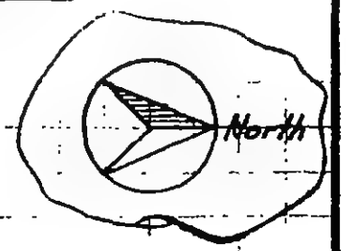

LICENSED PROFESSIONAL ENGINEER — LESLIE E. ROBERTSON — No. 34960 — UNIVERSITY OF THE STATE OF NEW YORK

DESIGNED M. RAMANI

DRAWN A. FRANQUI

REVIEWED LEAR

19-B-1121

SKILLING, HELLE, CHRISTIANSEN, ROBERTSON — Structural & Civil Engineers

PROJECT: THE WORLD TRADE CENTER | TITLE: ENLARGED OPENING AT TV TRANSMISSION LINE SHAFT - TOWER A | DATE: 5-15-72

REVISIONS

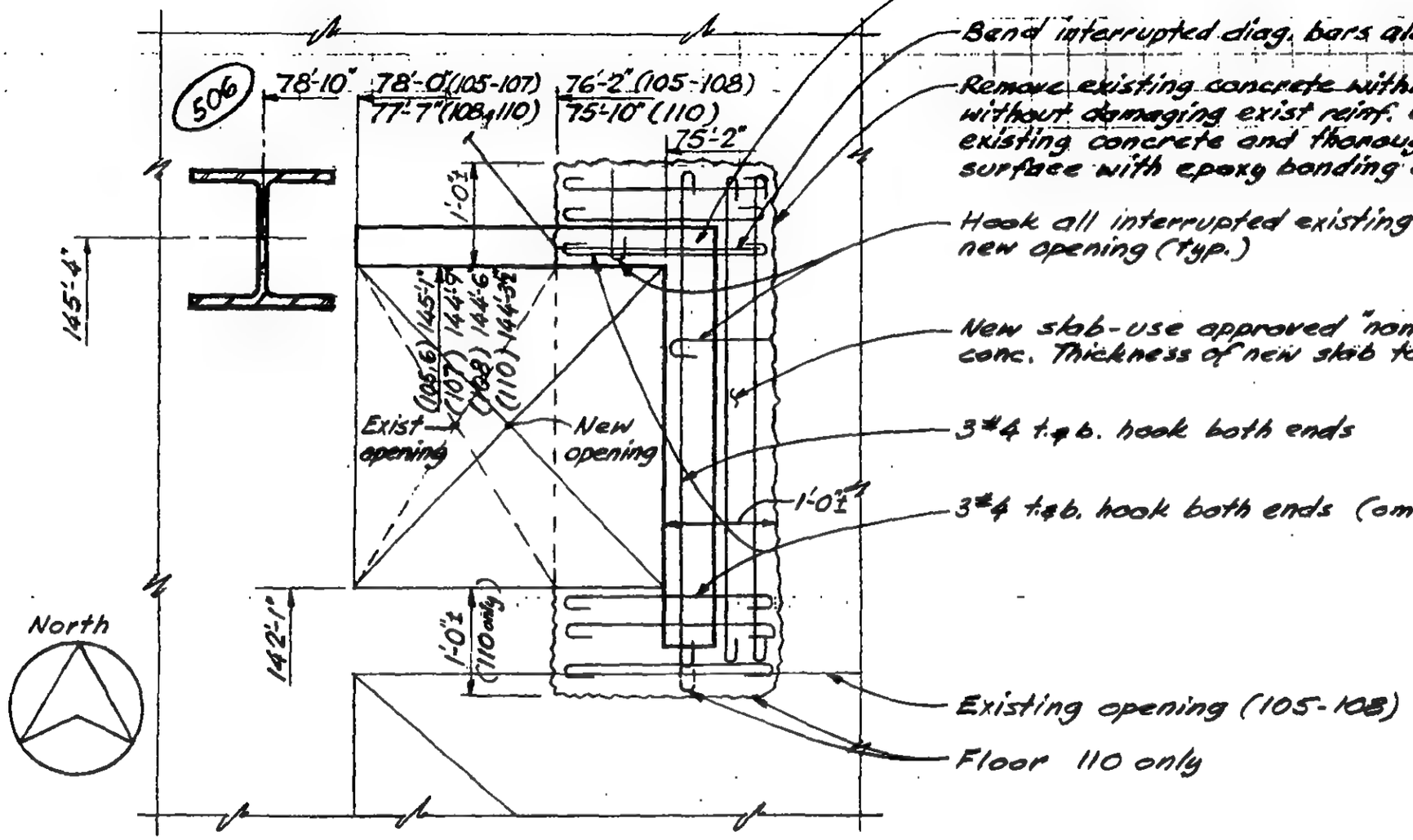

Part Plan at Floor 105, 106, 107, 108 & 110

LICENSED PROFESSIONAL ENGINEER — LESLIE E. ROBERTSON — No. 34360 — UNIVERSITY OF THE STATE OF NEW YORK

DESIGNED: JTM
DRAWN: JG
REVIEWED:

19-A-1120

SKILLING, HELLE, CHRISTIANSEN, ROBERTSON — Structural & Civil Engineers

PROJECT: THE WORLD TRADE CENTER | TITLE: DUMBWAITER PIT SUPPORT - FLOOR 106 | DATE: 11-9-73

REVISIONS

6-26-74

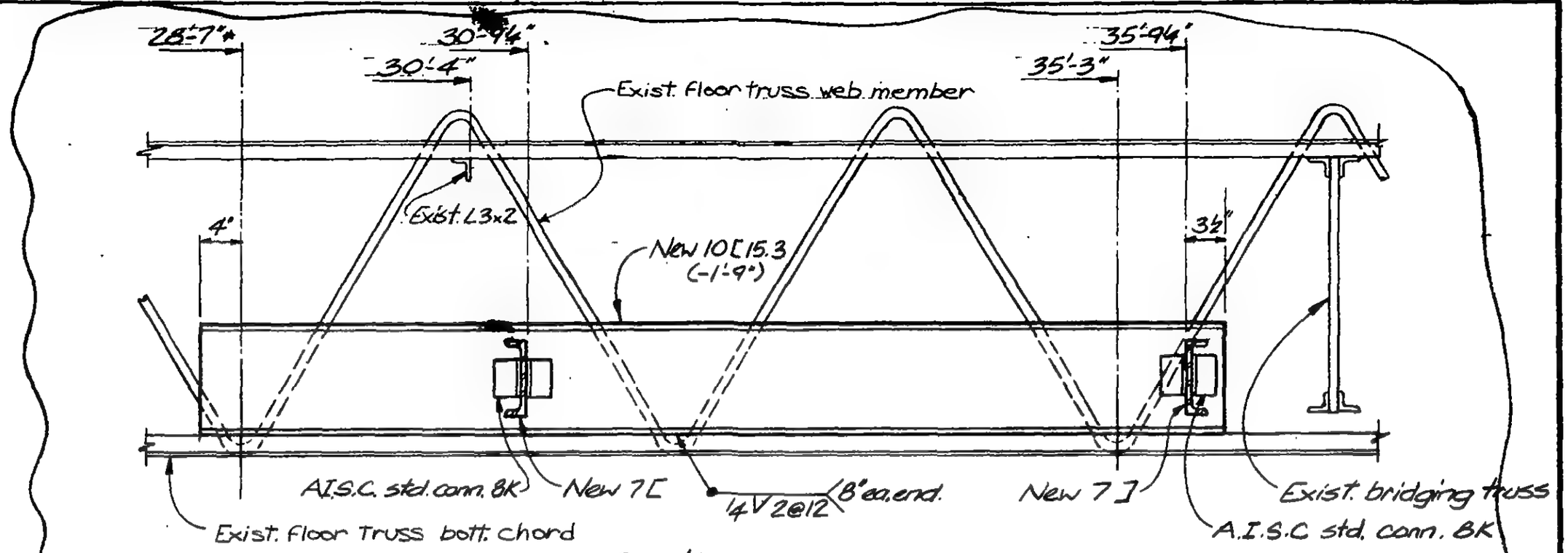

Section a-a
Section b-b (opp. hand.)

Notes: (1) Elevation of top new C's given (-) below ref. Fl. 106.
(2) New 10 C 15.3's hard against web member of exist. floor truss

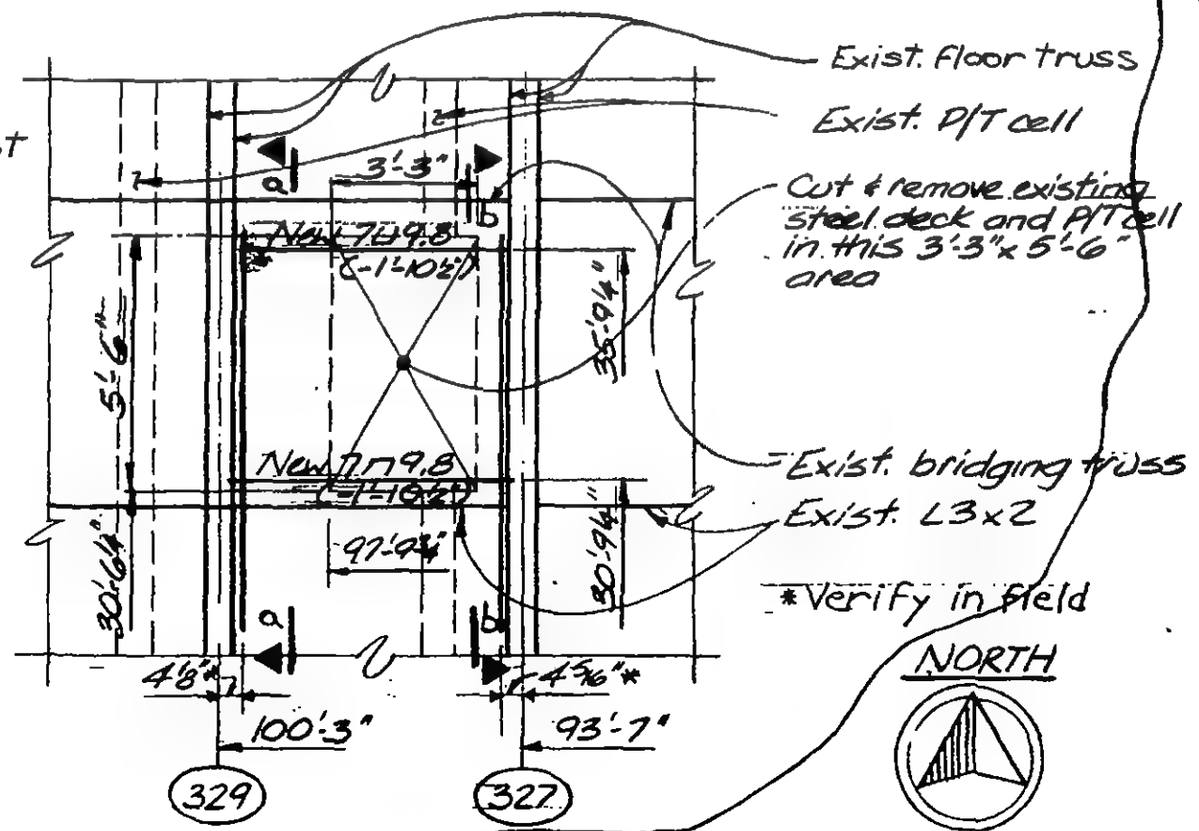

Part Plan Fl. 106

LICENSED PROFESSIONAL ENGINEER — LESLIE E. ROBERTSON — No. 34360 — UNIVERSITY OF THE STATE OF NEW YORK

DESIGNED J.T.M
DRAWN Bruni
REVIEWED WAB

19-A-1122

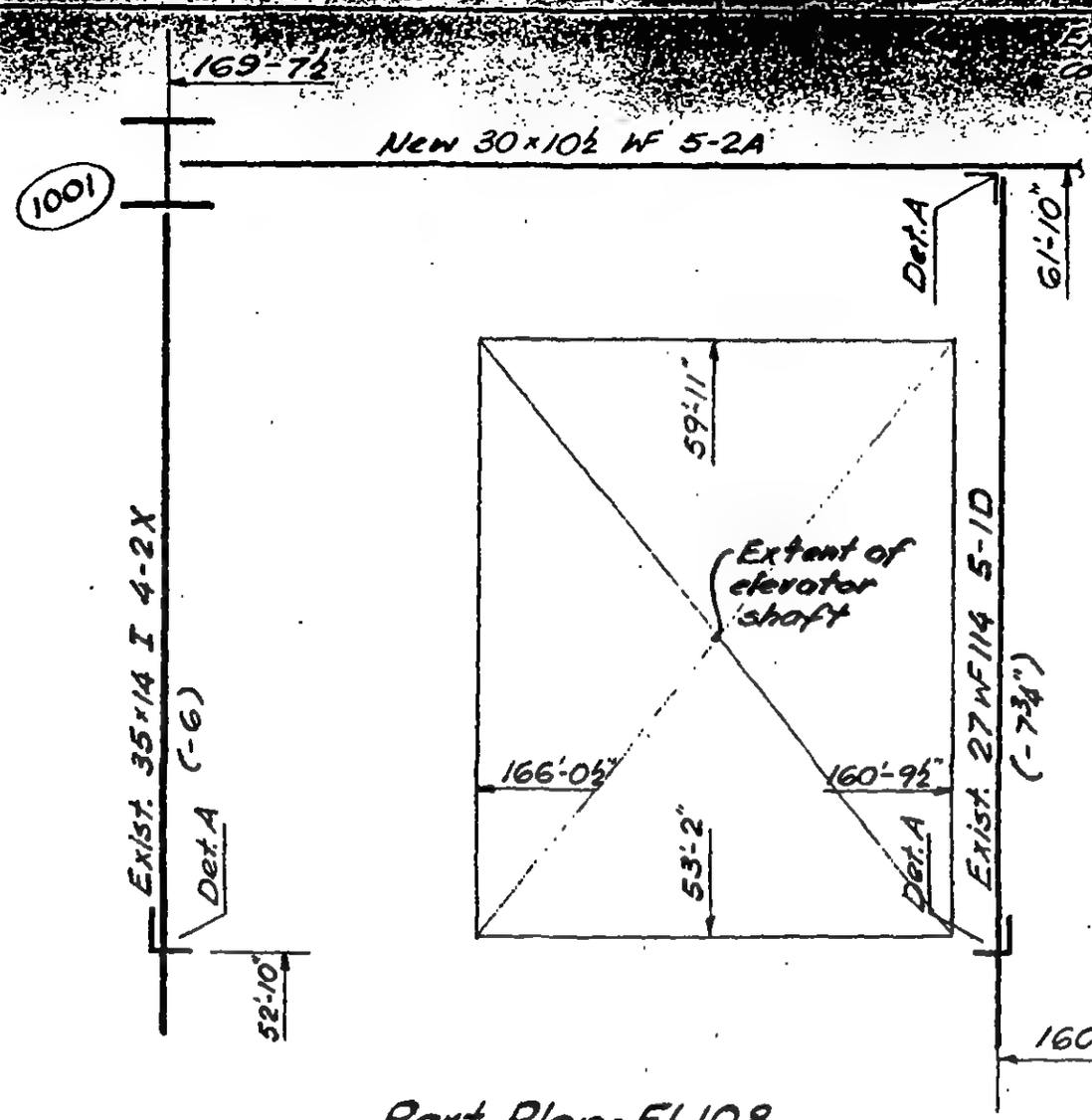

Part Plan-Fl. 108

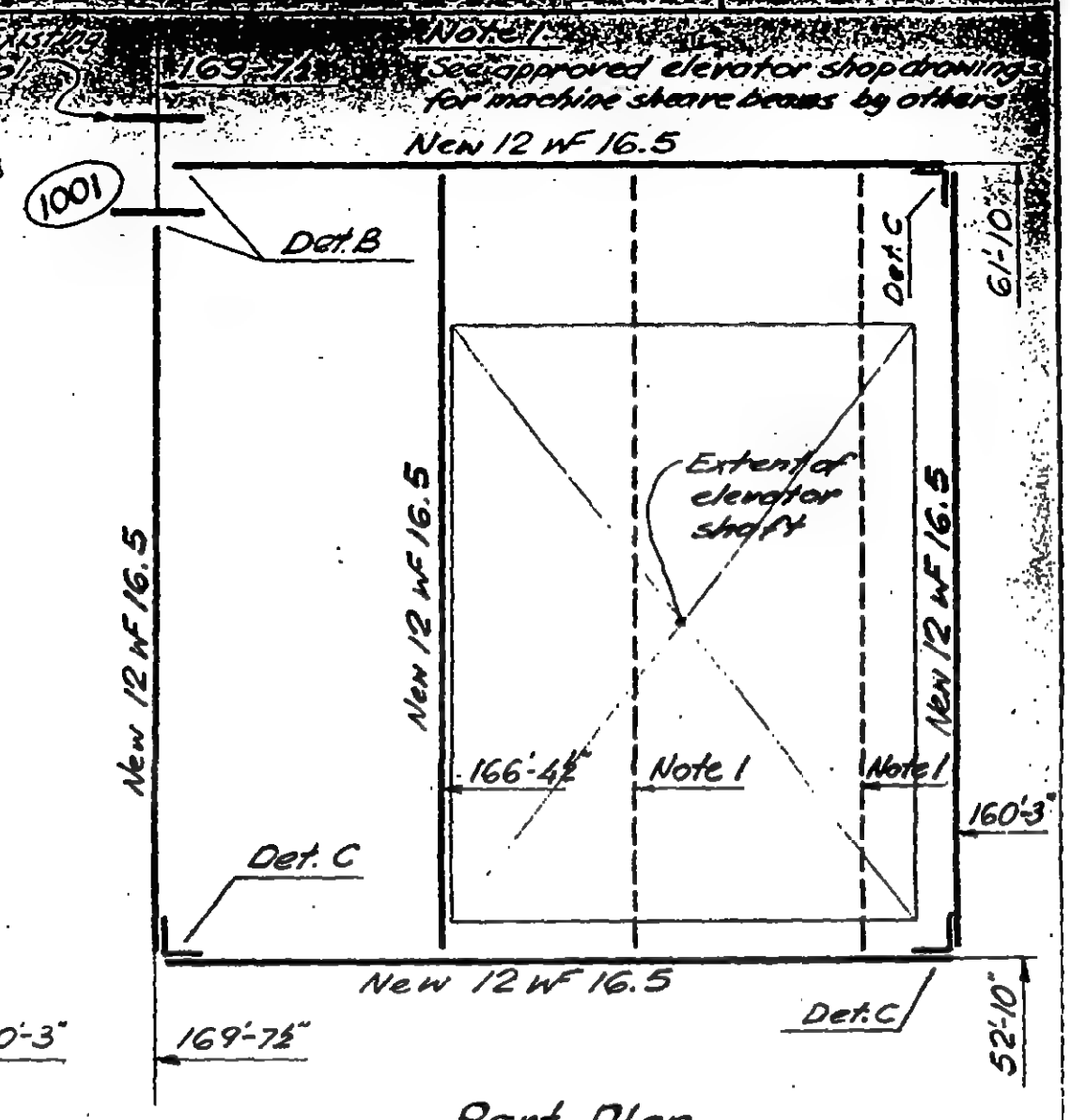

Part Plan

(T.O.S. +14'-6" above Fl. 107, unless noted)

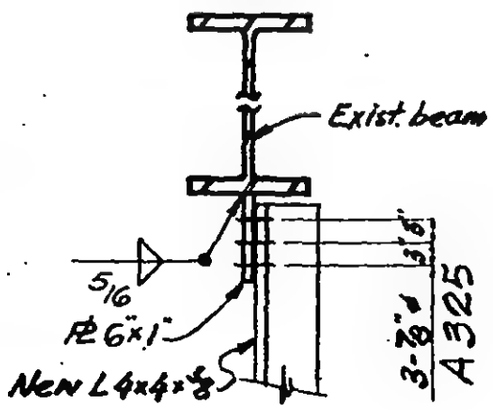

Detail A

(Shown in elevation)

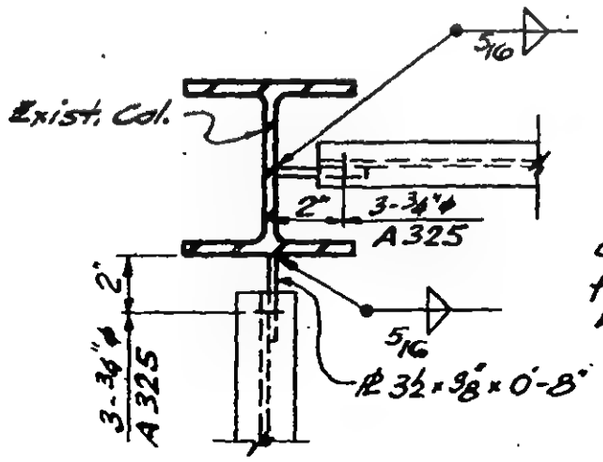

Detail B

(Shown in Plan)

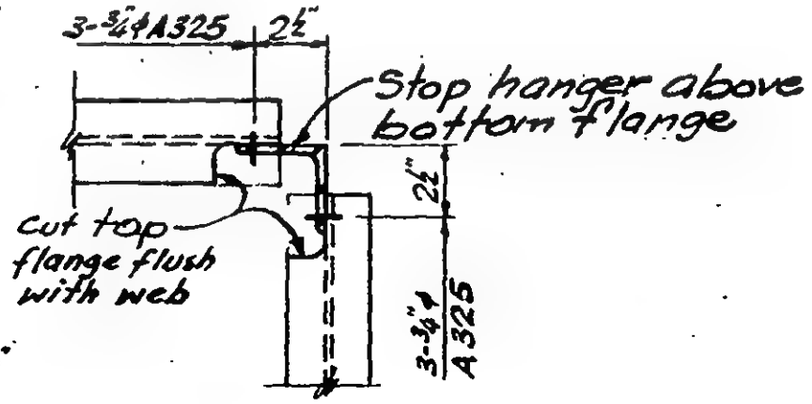

Detail C

(Shown in Plan)

LICENSED PROFESSIONAL ENGINEER
LESLIE E. ROBERTSON
No. 34360
UNIVERSITY OF THE STATE OF NEW YORK

DESIGNED Chiang
DRAWN J.G.
CHECKED

19-A-1122.1

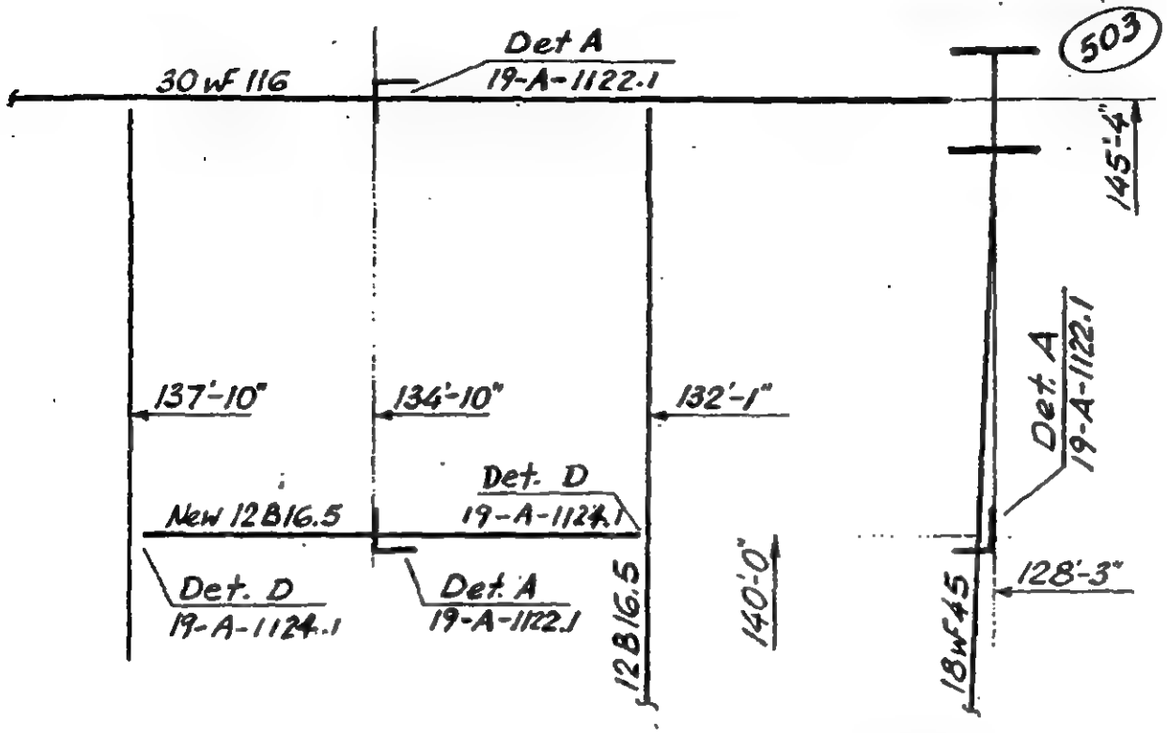

Port Plan Floor 108

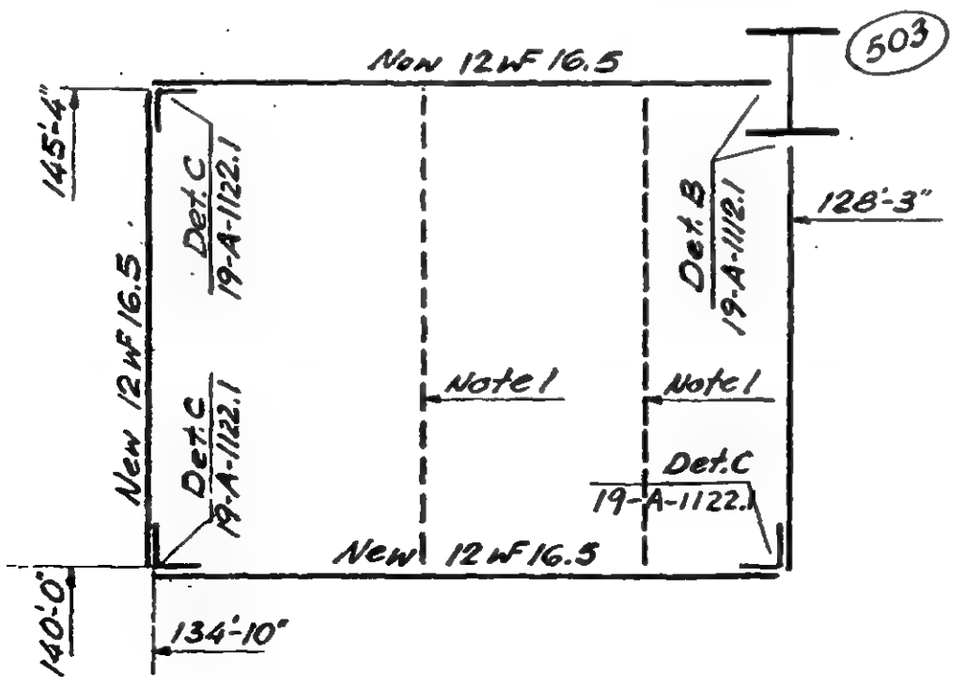

Note 1.
See approved elevator shop drawing for machine sheave beams, by others.

Port Plan
(+12'-0" above Fl. 107)

LICENSED PROFESSIONAL ENGINEER
LESLIE E. ROBERTSON
No 34360
THE STATE OF NEW YORK
THE UNIVERSITY OF

DESIGNED K. Chiang
DRAWN JG
REVIEWED

19-A-1122.2

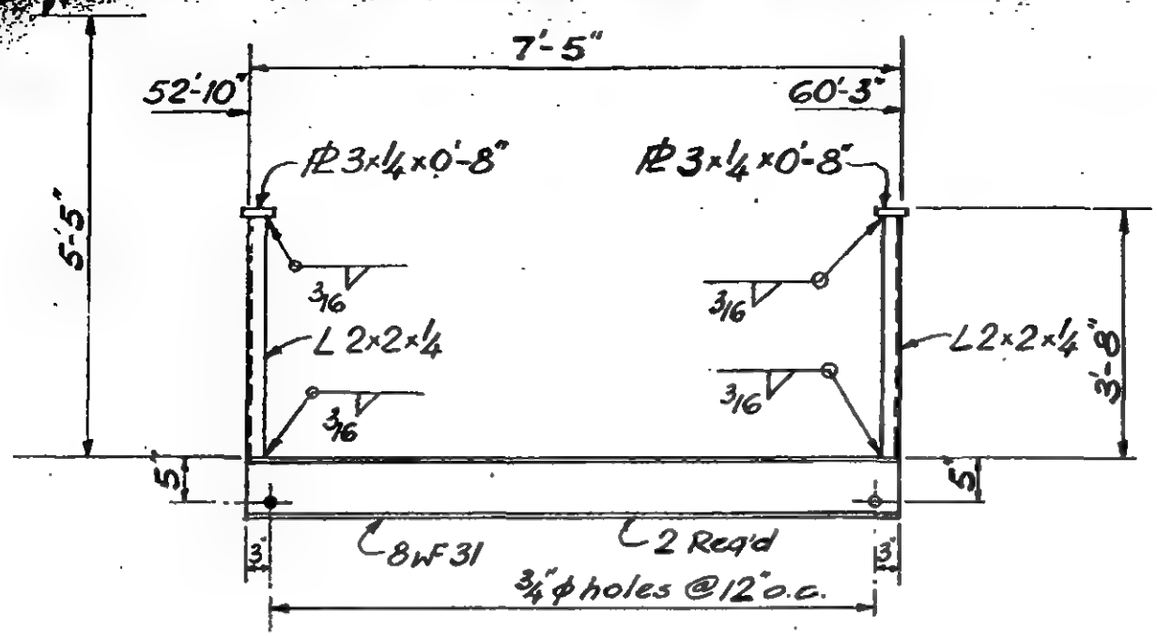

Embedment Detail - Club Elevator Pit

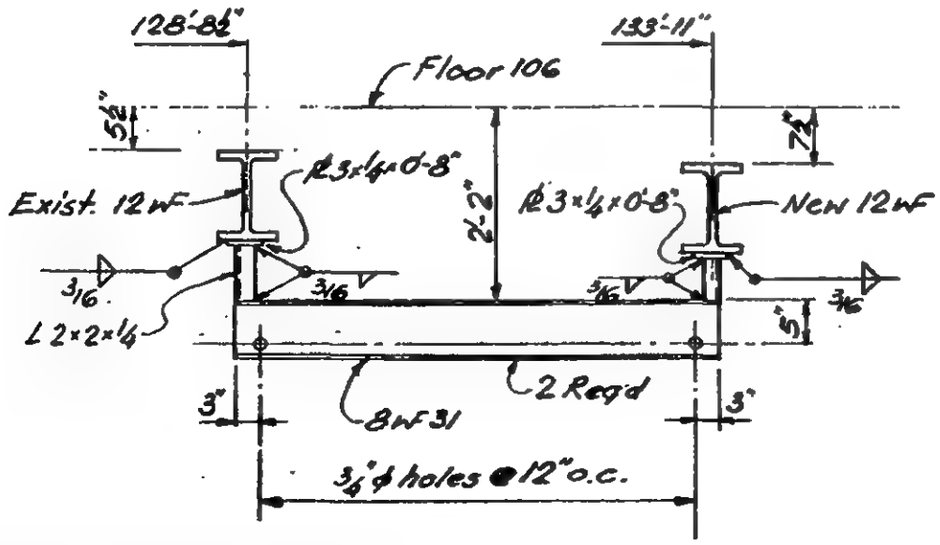

Embedment Detail - Dumbwaiter Pit

LICENSED PROFESSIONAL ENGINEER
LESLIE E. ROBERTSON
No. 34360
UNIVERSITY OF THE STATE OF NEW YORK

DESIGNED K. Chiang
DRAWN JG
REVIEWED

19-A-1123

REVISIONS

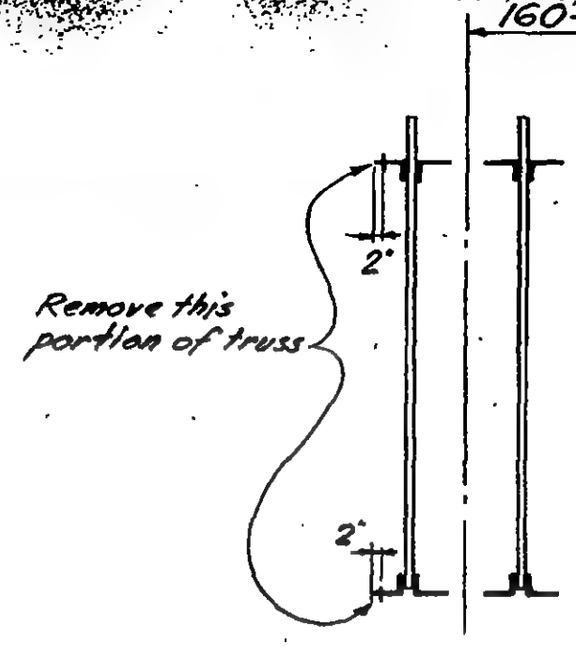

Detail A
(Truss elevation looking North)

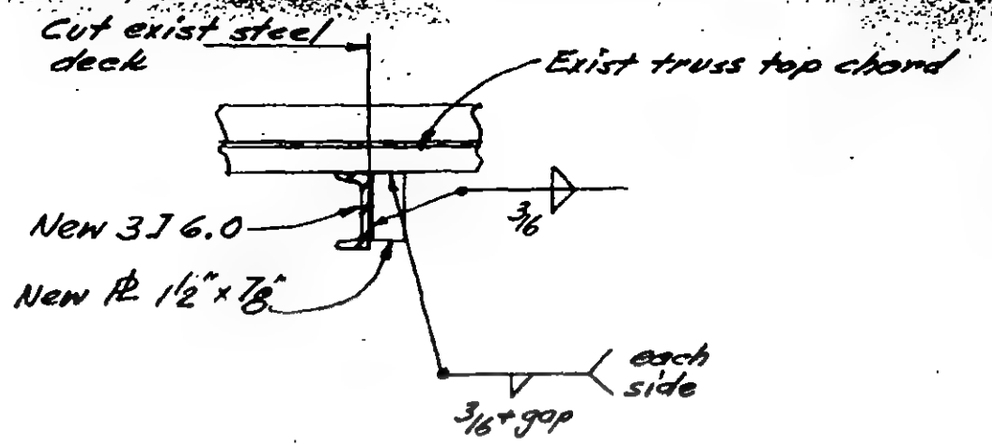

Detail B

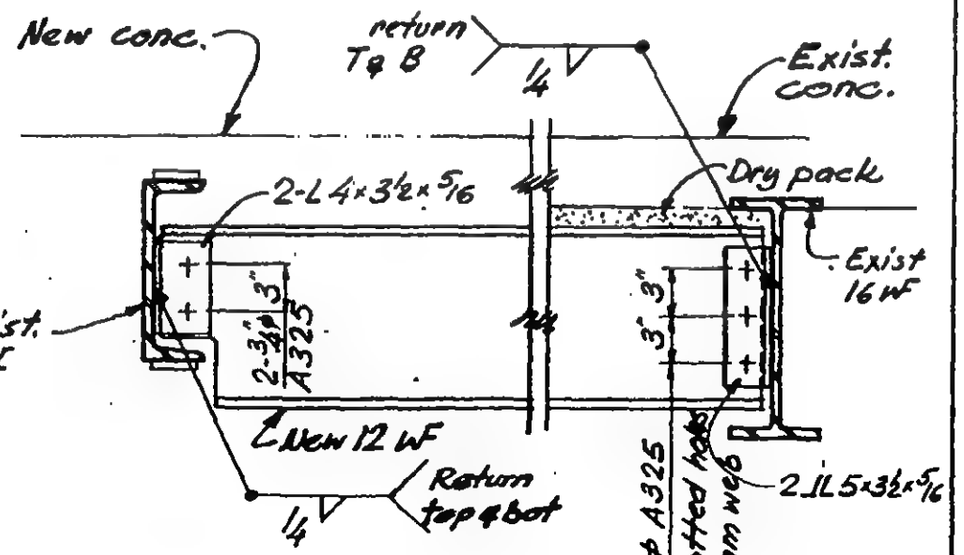

Detail C

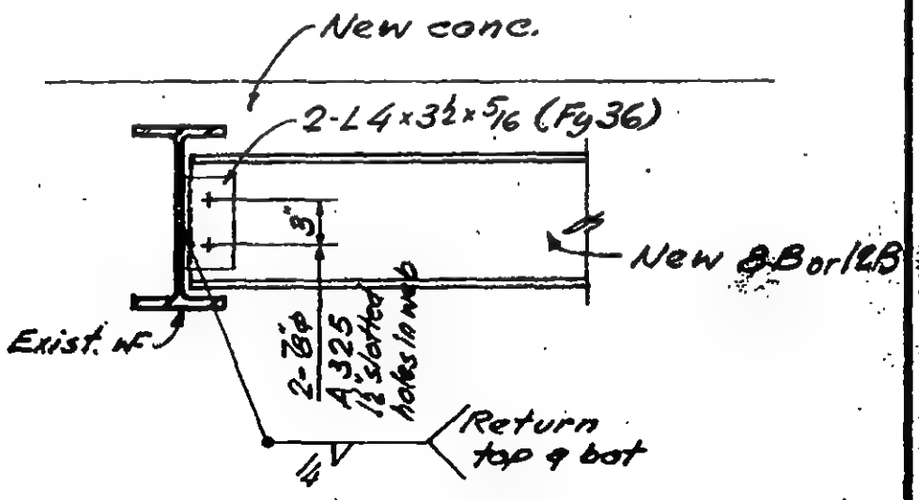

Detail D

LICENSED PROFESSIONAL ENGINEER
LESLIE E. ROBERTSON
No. 34360
UNIVERSITY OF THE STATE OF NEW YORK

DESIGNED: chiang
DRAWN: JG
REVIEWED:

19-A-1124.1

REPAIR DETAIL FLOOR 107 6-16-72

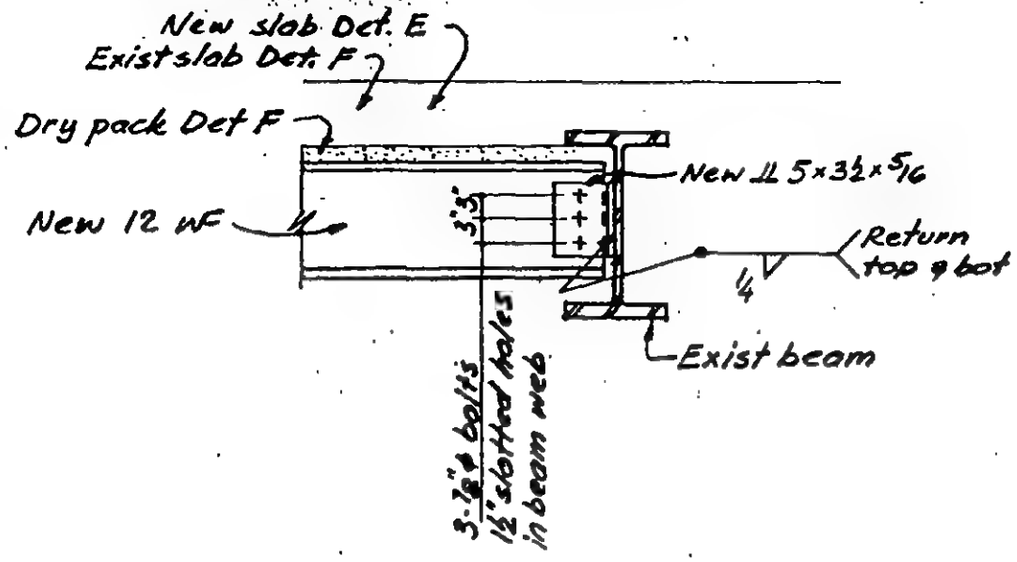

Detail E

Detail F

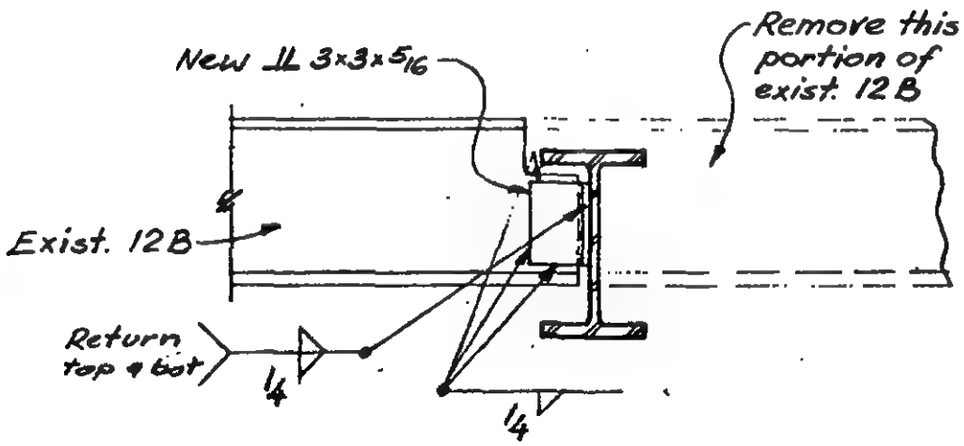

Detail G

LICENSED PROFESSIONAL ENGINEER
LESLIE E. ROBERTSON
No 34360
UNIVERSITY OF THE STATE OF NEW YORK

DESIGNED

DRAWN

REVIEWED

19-A-1124.2

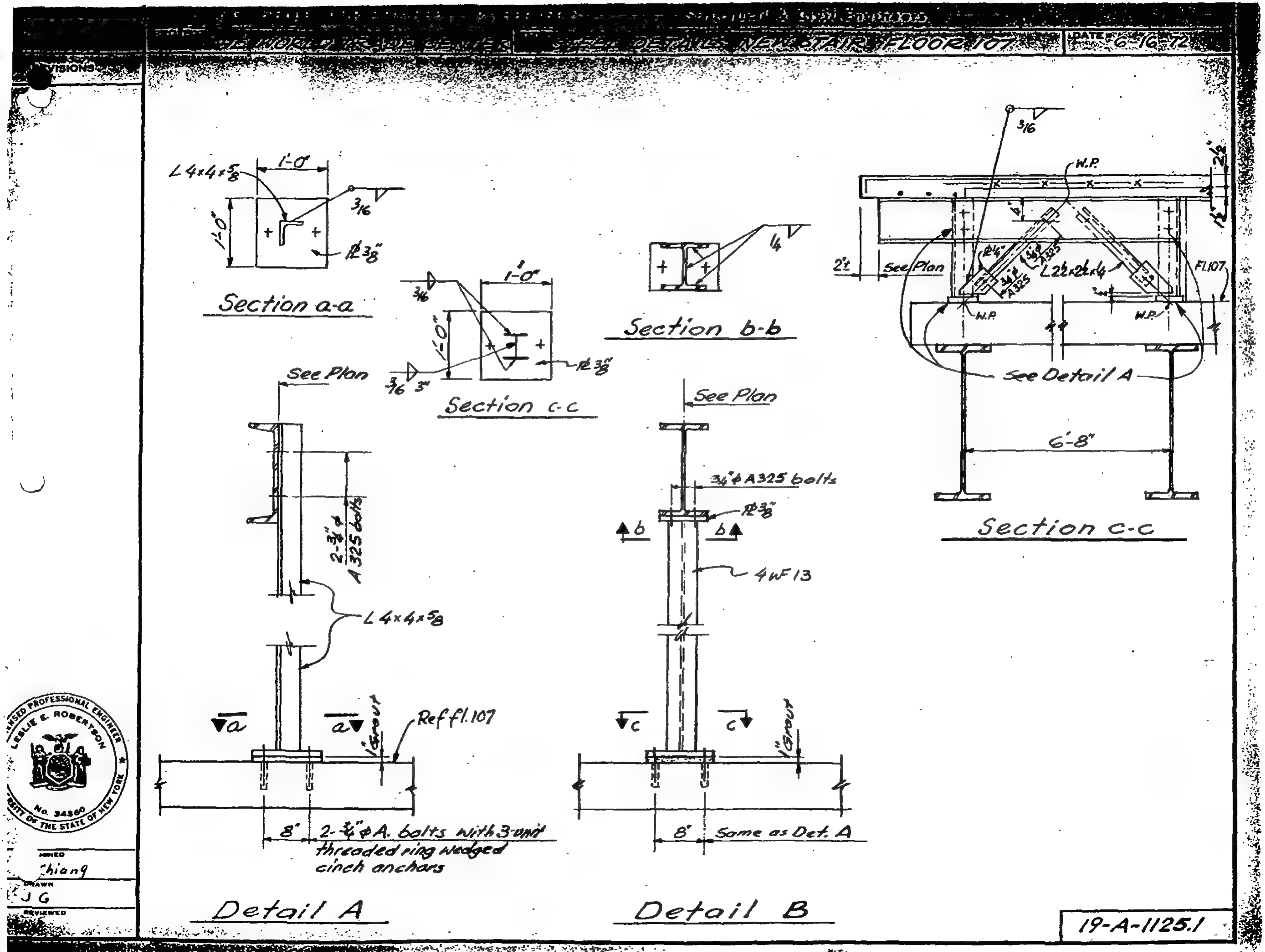
WORLD TRADE CENTER
STEEL DETAILS NEW STAIR FLOOR 107
DATE 6-16-72
REVISIONS
L4x4x5/8
1'-0"
1'-0"
3/16
PL 3/8"
Section a-a
3/16
1'-0"
1'-0"
PL 3/8"
3/16 3"
Section c-c
1/4
Section b-b
3/16
W.P.
2 1/2"
1 1/2"
2 1/2"
See Plan
3/4" A325
L2 1/2x2 1/2x1/4
Fl.107
W.P.
W.P.
See Detail A
6'-8"
Section c-c
See Plan
2-3/4"φ A325 bolts
L4x4x5/8
a
a
1" Grout
Ref fl.107
8"
2-3/4"φ A. bolts with 3-unit threaded ring wedged cinch anchors
Detail A
See Plan
3/4"φ A325 bolts
PL 3/8"
b
b
4WF13
c
c
1" Grout
8"
Same as Det. A
Detail B
LICENSED PROFESSIONAL ENGINEER
LESLIE E. ROBERTSON
No. 34360
UNIVERSITY OF THE STATE OF NEW YORK
Chiang
DRAWN
JG
REVIEWED
19-A-1125.1

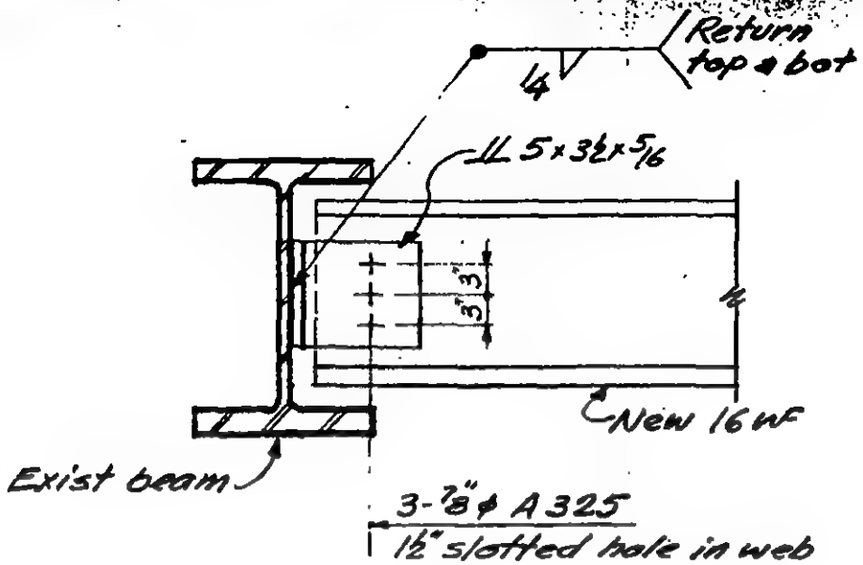

Detail D

LICENSED PROFESSIONAL ENGINEER
LESLIE E. ROBERTSON
NO 34360
UNIVERSITY OF THE STATE OF NEW YORK

DESIGNED
K. Chiang
DRAWN
JG
REVIEWED

19-A-1125.2

PROJECT: THE WORLD TRADE CENTER

DATE: 6-16-72

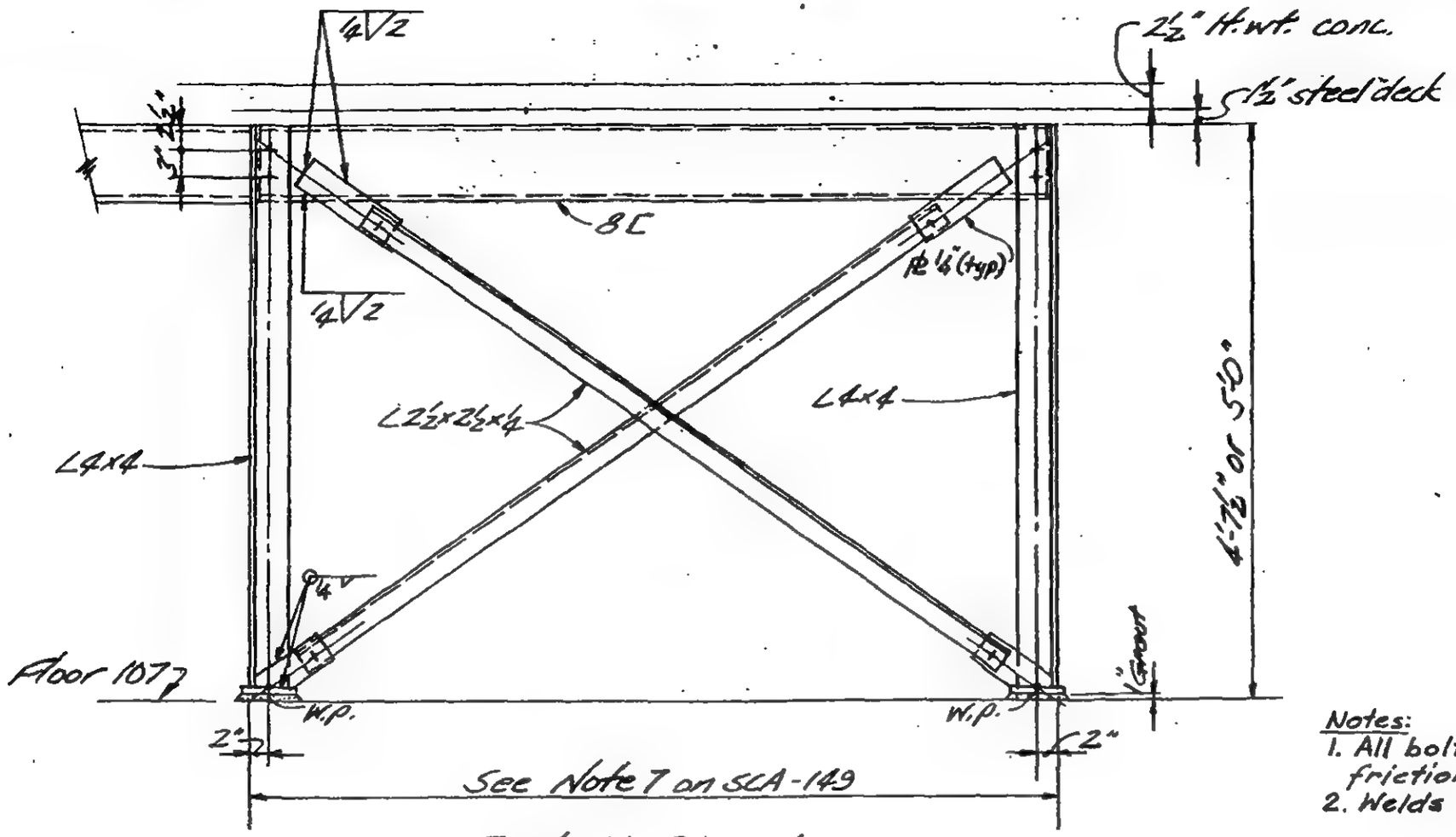

Detail Elevation

Notes:
1. All bolts are 3/4"φ A325 bolts friction type.
2. Welds to be E70 XX.

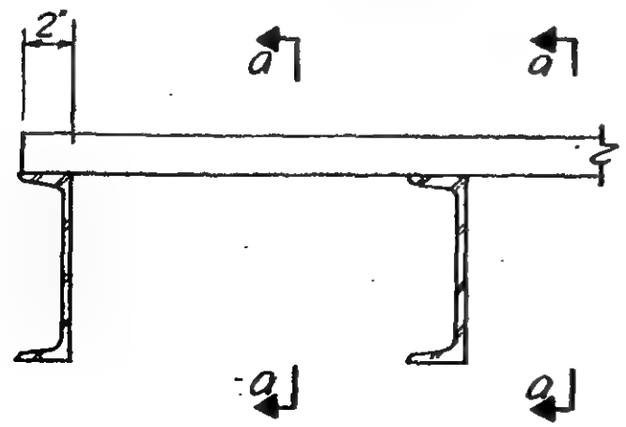

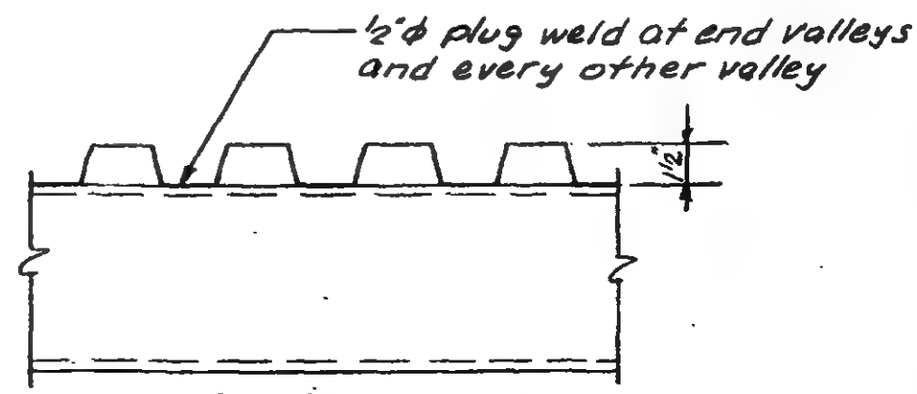

Section a-a

Steel deck supported on steel Beams

LICENSED PROFESSIONAL ENGINEER
LESLIE E. ROBERTSON
No. 34360
UNIVERSITY OF THE STATE OF NEW YORK

DESIGNED: K. Chiang

DRAWN

REVIEWED

19-A-1127

SKILLING, HELLE, CHRISTIANSEN, ROBERTSON — Structural & Civil Engineers

PROJECT THE WORLD TRADE CENTER | TITLE TOWER A & B - LOBBY CEILING WASHER SUPPORTS CORE | DATE 7-9-73

REVISIONS
1-8-74

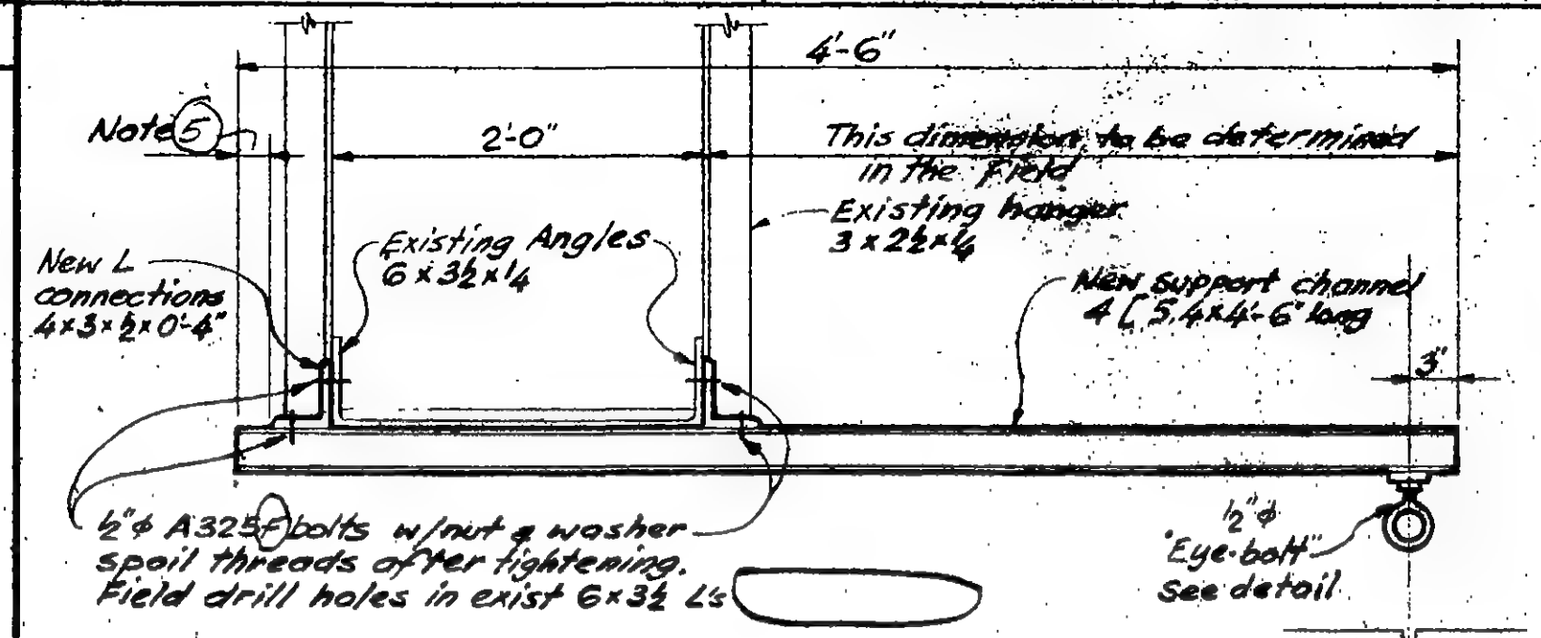

A

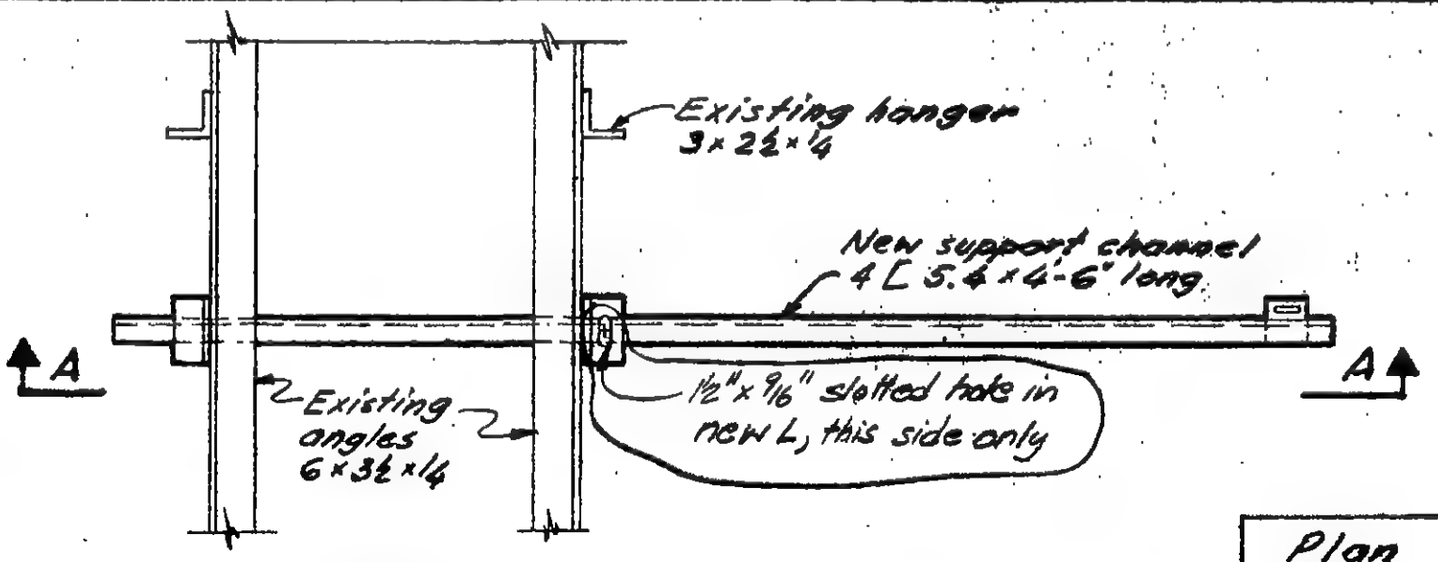

Plan

1. Erect assembly, all bolts finger tight.
2. Position, in field, eye bolt over existing holes in plaster ceiling.
3. Drop string-line (i.e. "plumb-bob") through hole in plaster ceiling. Check to see that string-line is not binding or rubbing on plaster ceiling at hole while adjusting all slotted hole connections.
4. Tighten all bolts.
5. Trim back-side of channel, if necessary.

Field Procedure

26 REQ'D PER TOWER

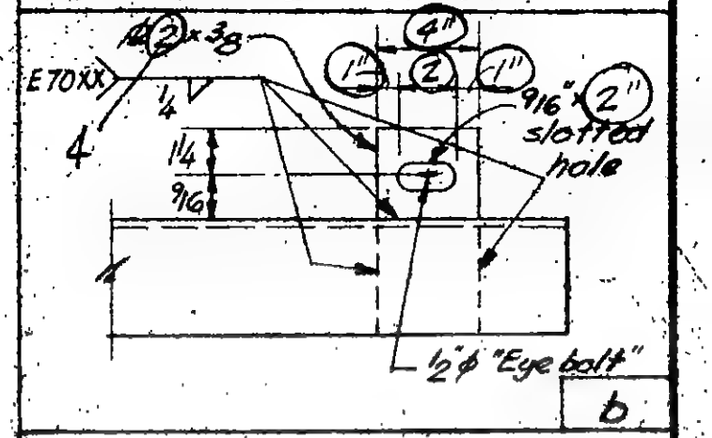

b

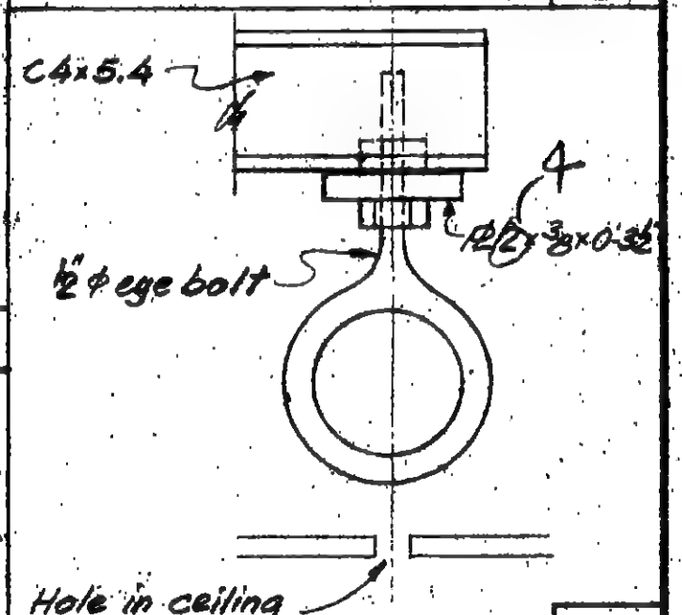

B

19-AB-1128.1

LICENSED PROFESSIONAL ENGINEER LESLIE E. ROBERTSON No. 34360 STATE OF NEW YORK

DESIGNED A.R
DRAWN J.G.
REVIEWED WAB

SKILLING, HELLE, CHRISTIANSEN, ROBERTSON — Structural & Civil Engineers

PROJECT: THE WORLD TRADE CENTER

TITLE: TOWER A & B - LOBBY CEILING WASHER SUPPORTS CORE

DATE: 7-9-73

REVISIONS

1-8-74

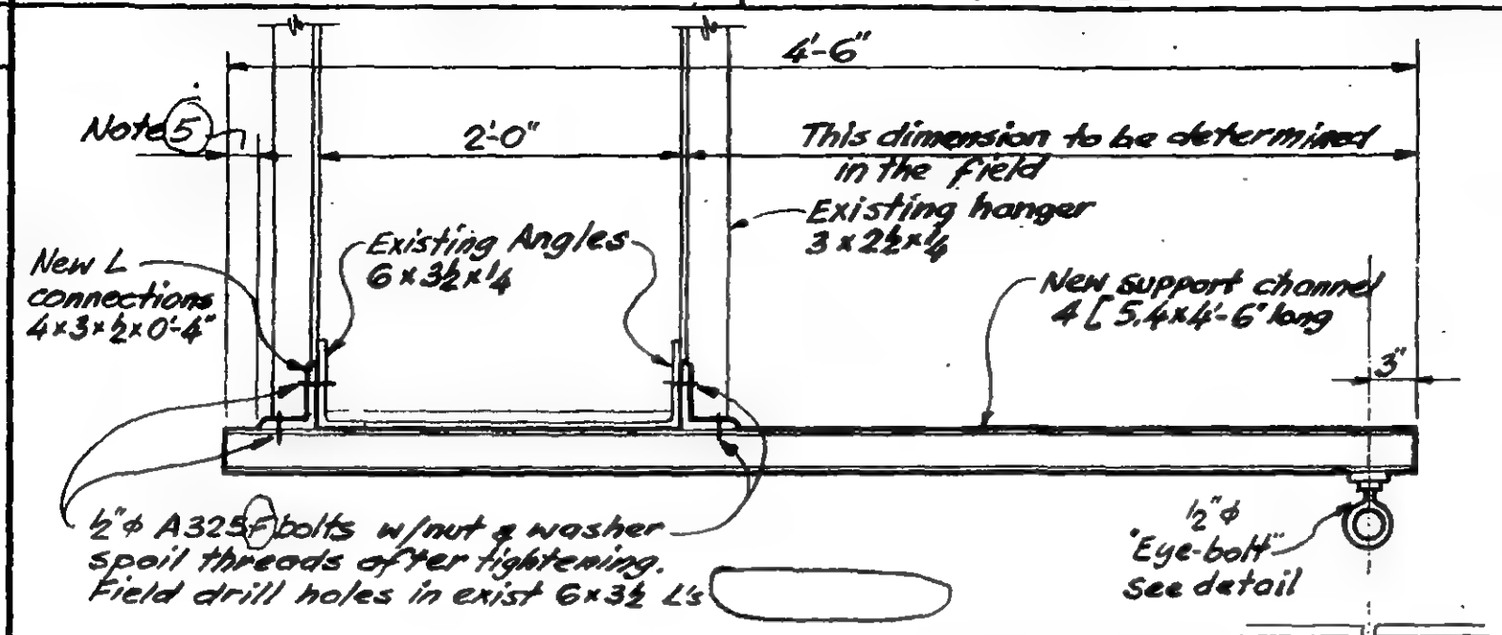

A

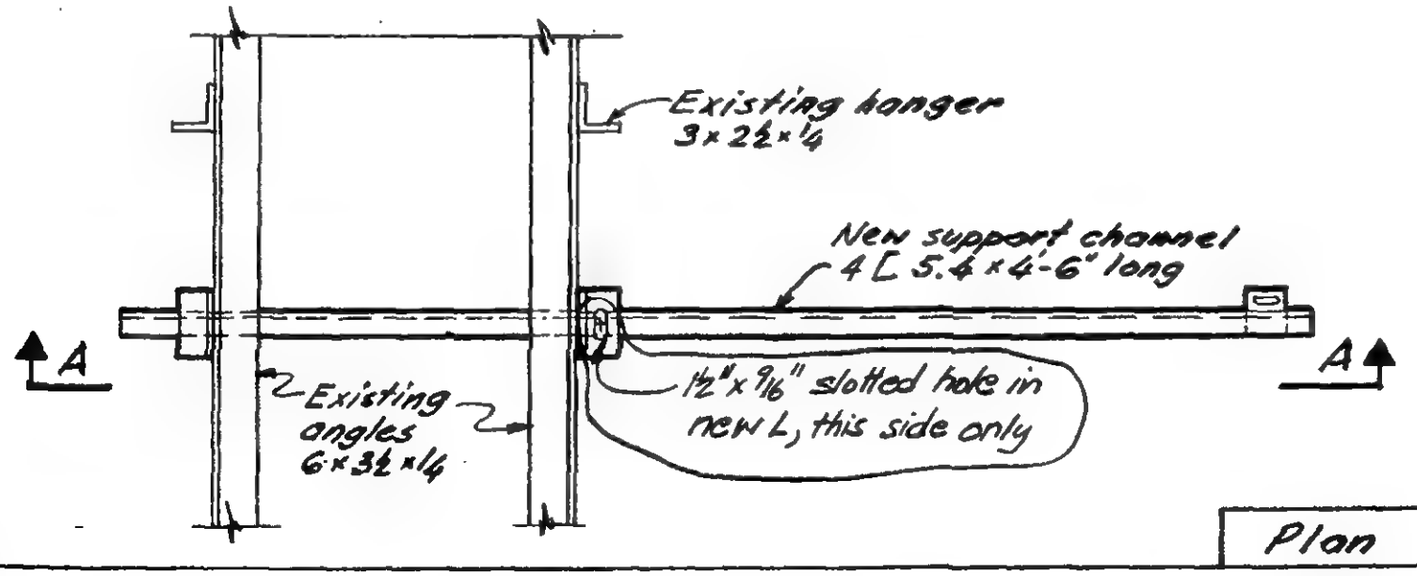

Plan

26 REQ'D PER TOWER

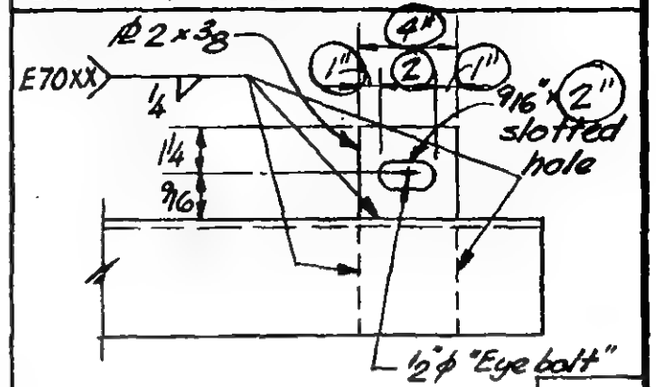

b

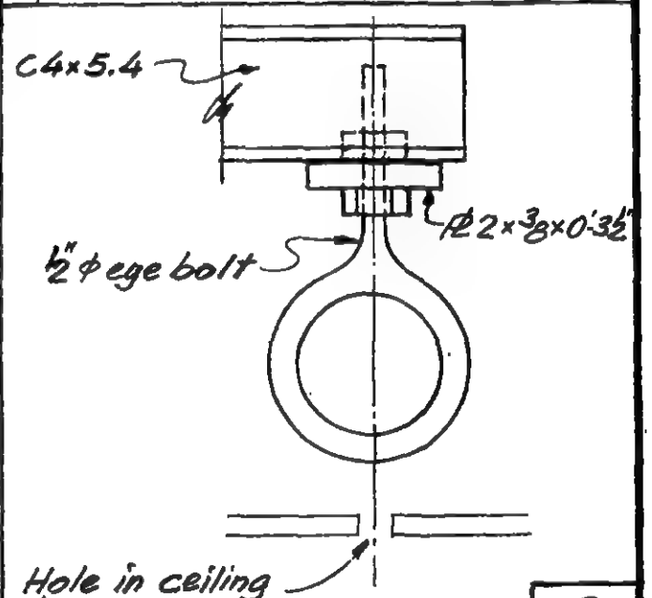

B

1. Erect assembly, all bolts finger tight.
2. Position, in field, eye bolt over existing holes in plaster ceiling.
3. Drop string-line (i.e. "plumb-bob") through hole in plaster ceiling. Check to see that string-line is not binding or rubbing on plaster ceiling at hole while adjusting all slotted hole connections.
4. Tighten all bolts.
5. Trim back-side of channel, if necessary.

Field Procedure

LICENSED PROFESSIONAL ENGINEER — LESLIE E. ROBERTSON — No. 34360 — UNIVERSITY OF THE STATE OF NEW YORK

DESIGNED: A.R

DRAWN: J.G.

REVIEWED: WAB

19-AB-1128.1

SKILLING, HELLE, CHRISTIANSEN, ROBERTSON — Structural & Civil Engineers

PROJECT: THE WORLD TRADE CENTER | TITLE: TOWER A&B-LOBBY CEILING-WASHER SUPPORTS-PERIMETER | DATE: 7-9-73

REVISIONS

1-8-74

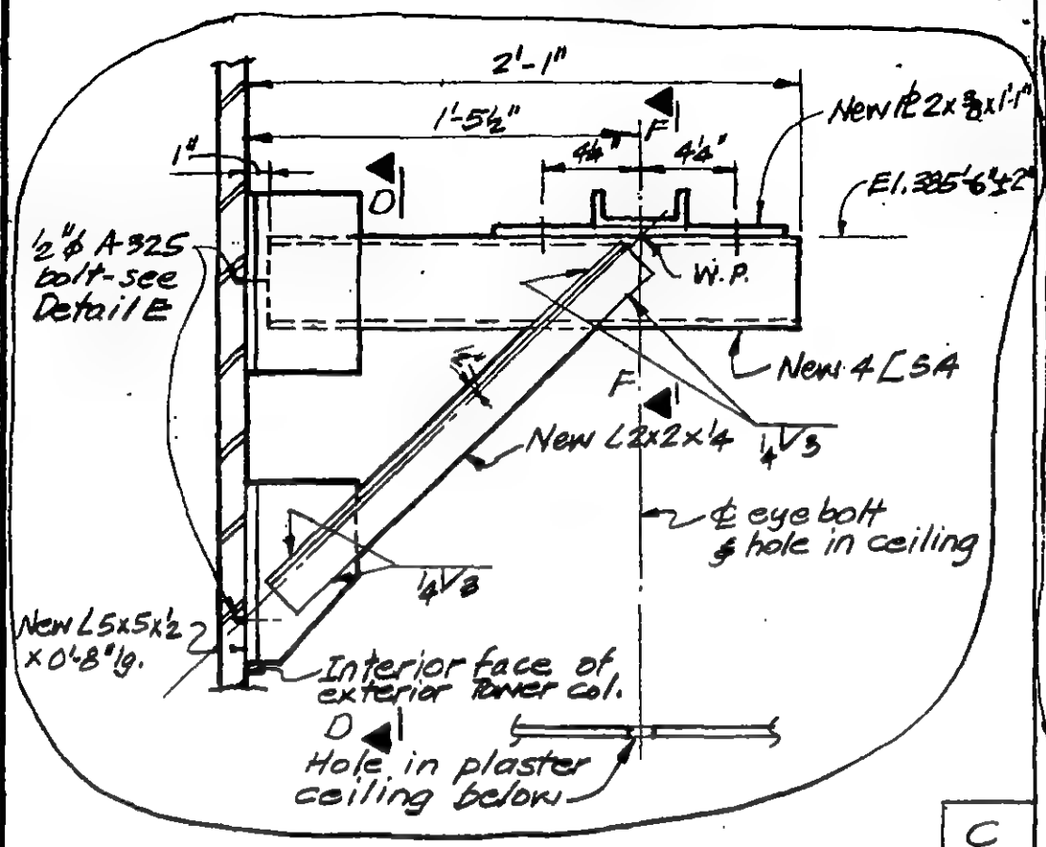

C

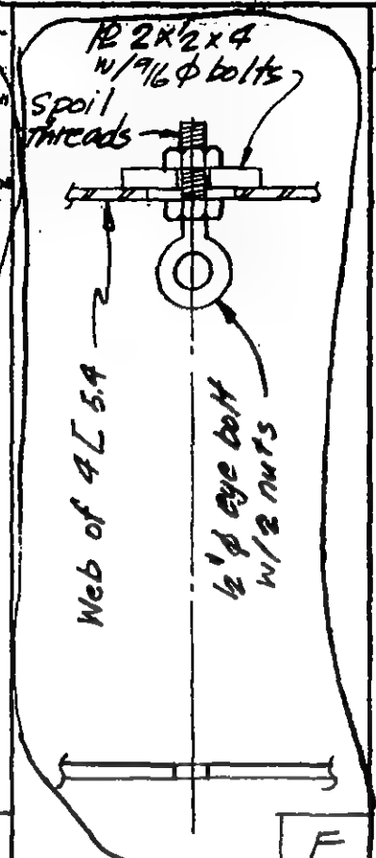

F

40 REQ'D PER TOWER

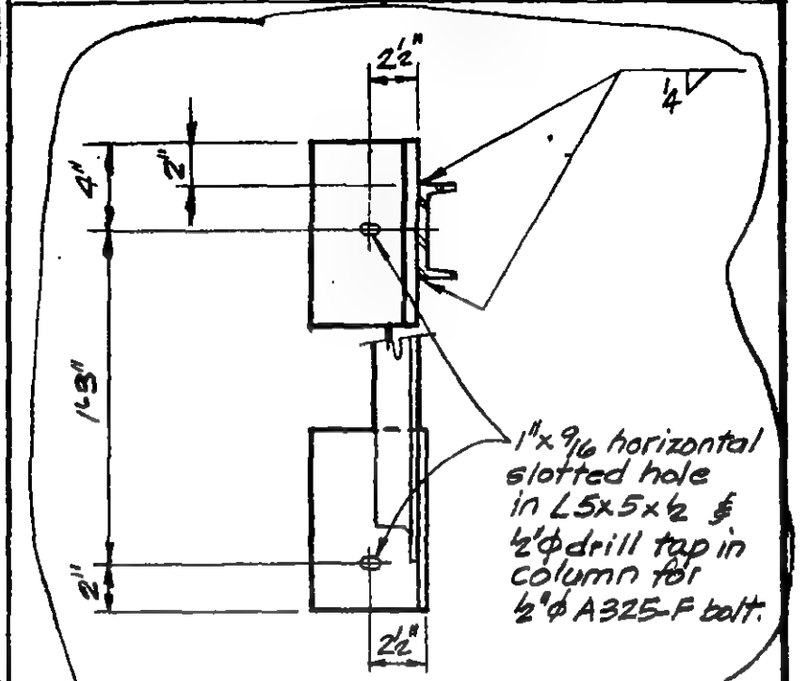

D

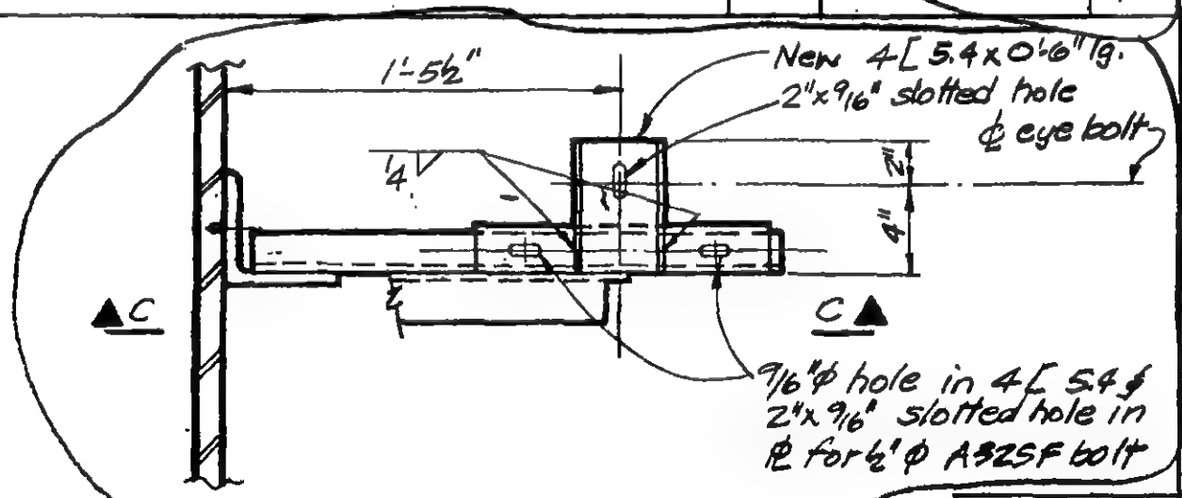

Plan

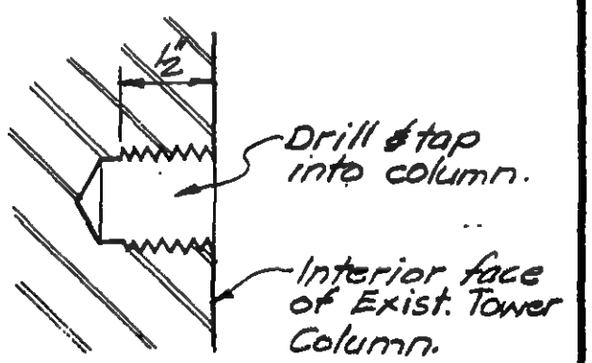

Drill and Tap Detail

E

1. Drill ϕ tap holes in exterior column
2. Connect assembly to exterior column (all bolts finger tight), position eye-bolt over existing holes in plaster ceiling below.
3. Drop string line (i.e. "plumb-bob") through hole in plaster ceiling. Check to see that string line is not binding or rubbing on plaster ceiling hole, while adjusting all slotted hole connections.
4. Tighten all bolts.

Field Procedure

LICENSED PROFESSIONAL ENGINEER — LESLIE E. ROBERTSON — No. 34960 — UNIVERSITY OF THE STATE OF NEW YORK

DESIGNED: AR
DRAWN: DMD-JG
REVIEWED: WAB

19-AB-1128.2

SKILLING, HELLE, CHRISTIANSEN, ROBERTSON — Structural & Civil Engineers

PROJECT: THE WORLD TRADE CENTER | TITLE: TOWER A & B-LOBBY CEILINGS-WASHER SUPPORTS-CORNER | DATE: 7-9-73

REVISIONS

1-8-74

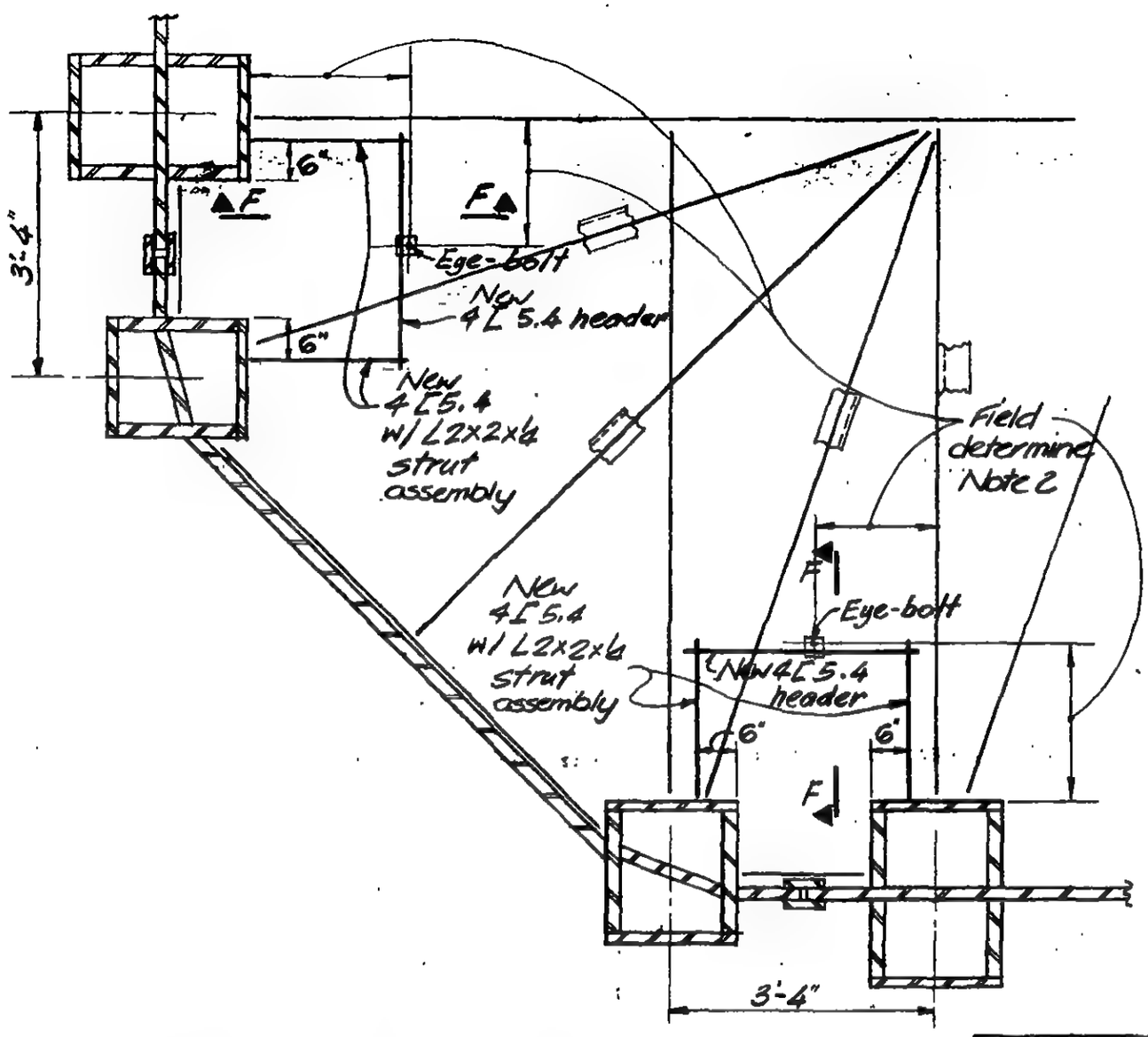

Plan

4 CORNERS REQ'D PER TOWER

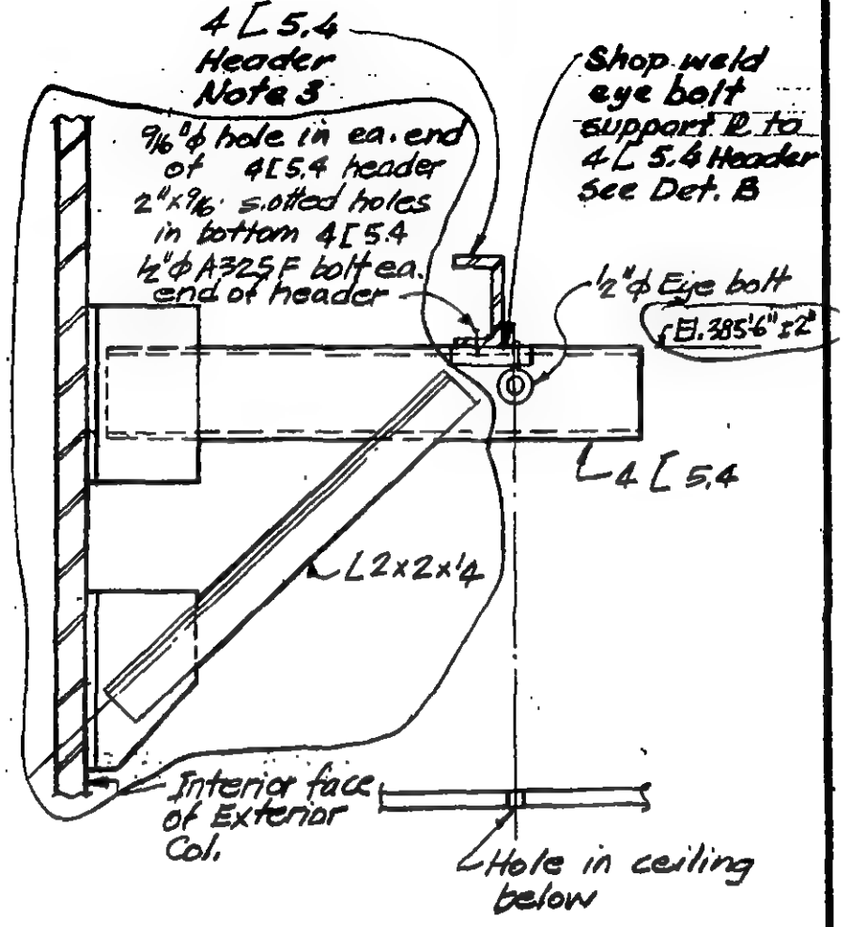

See Sections C & D for information not shown

F

1. Drill & tap holes in exterior column.
2. Connect assembly to exterior column (all bolts finger tight, position eye-bolt over existing holes in plaster ceiling below
3. Drop string line (i.e. plumb-bob') through hole in plaster ceiling. Check to see that string line is not binding or rubbing on plaster ceiling hole, while adjusting all slotted hole connections.
4. Tighten all bolts.

Field Procedure

LICENSED PROFESSIONAL ENGINEER — LESLIE E. ROBERTSON — No. 34360 — UNIVERSITY OF THE STATE OF NEW YORK

DESIGNED A.R.

DRAWN J.G.

REVIEWED WAB

19-AB-1128.3

SKILLING, HELLE, CHRISTIANSEN, ROBERTSON — Structural & Civil Engineers

PROJECT: THE WORLD TRADE CENTER | TITLE: SLAB REPAIR - FLOOR 107 - TOWER A | DATE: 7-31-73

REVISIONS

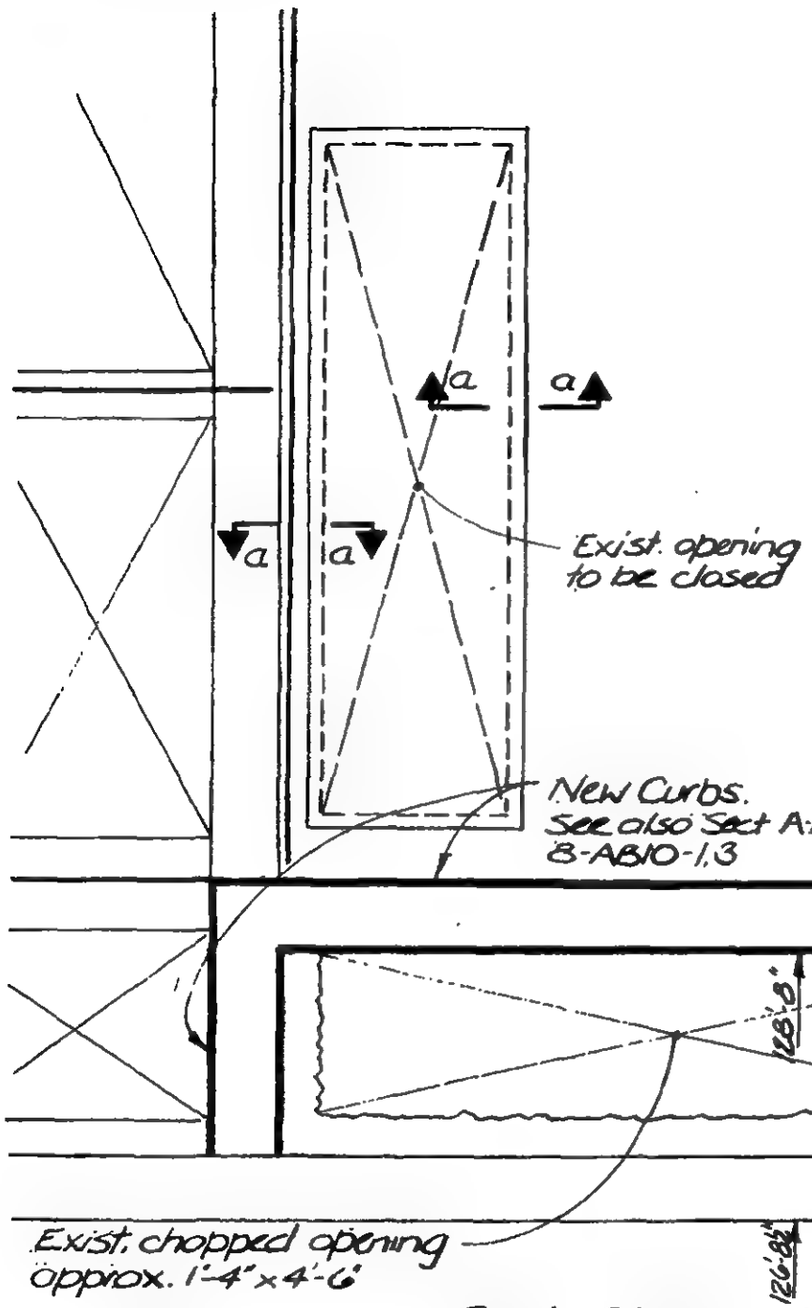

Part Plan 107th Floor

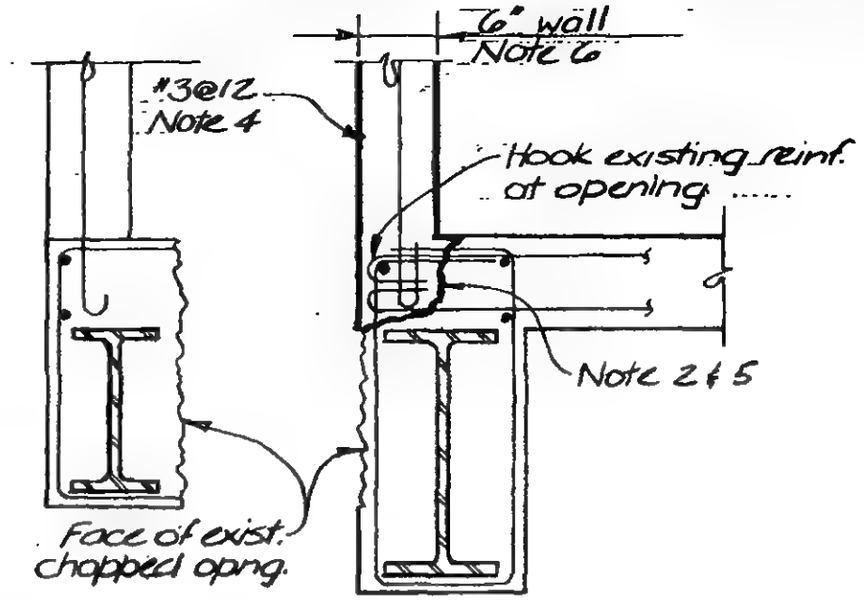

Sect. b-b

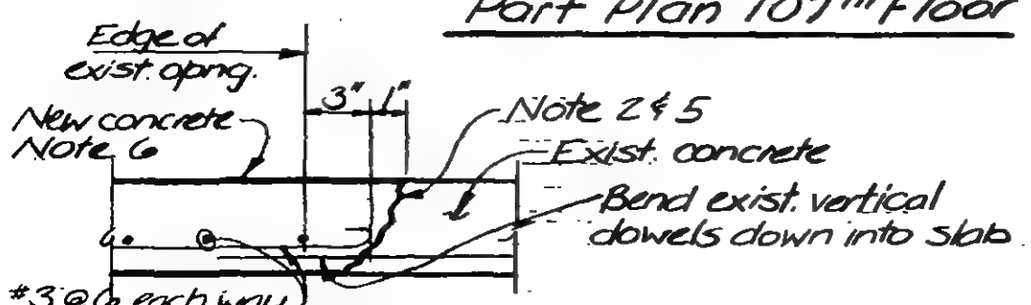

Sect. a-a

Tower A

Notes:

1. Slabs to be shored as req'd before removing existing concrete.
2. Remove existing concrete to line indicated without damaging existing reinf.
3. Cut existing reinf. and hook at edge of opening.
4. Add new reinf. as indicated
5. Clean face of existing concrete and thoroughly coat entire surface with epoxy bonding compound
6. Cast concrete to edge of opening using approved "non-shrink" f'c = 4000 psi concrete.

LICENSED PROFESSIONAL ENGINEER — LESLIE E. ROBERTSON — No 34360 — UNIVERSITY OF THE STATE OF NEW YORK

DESIGNED: WAB
DRAWN: JB
REVIEWED: WAB

19-A-1130.1

SKILLING, HELLE, CHRISTIANSEN, ROBERTSON — Structural & Civil Engineers

PROJECT: THE WORLD TRADE CENTER | TITLE: SLAB REPAIRS - FLOOR 107 - TOWER B | DATE: 7-3E73

REVISIONS

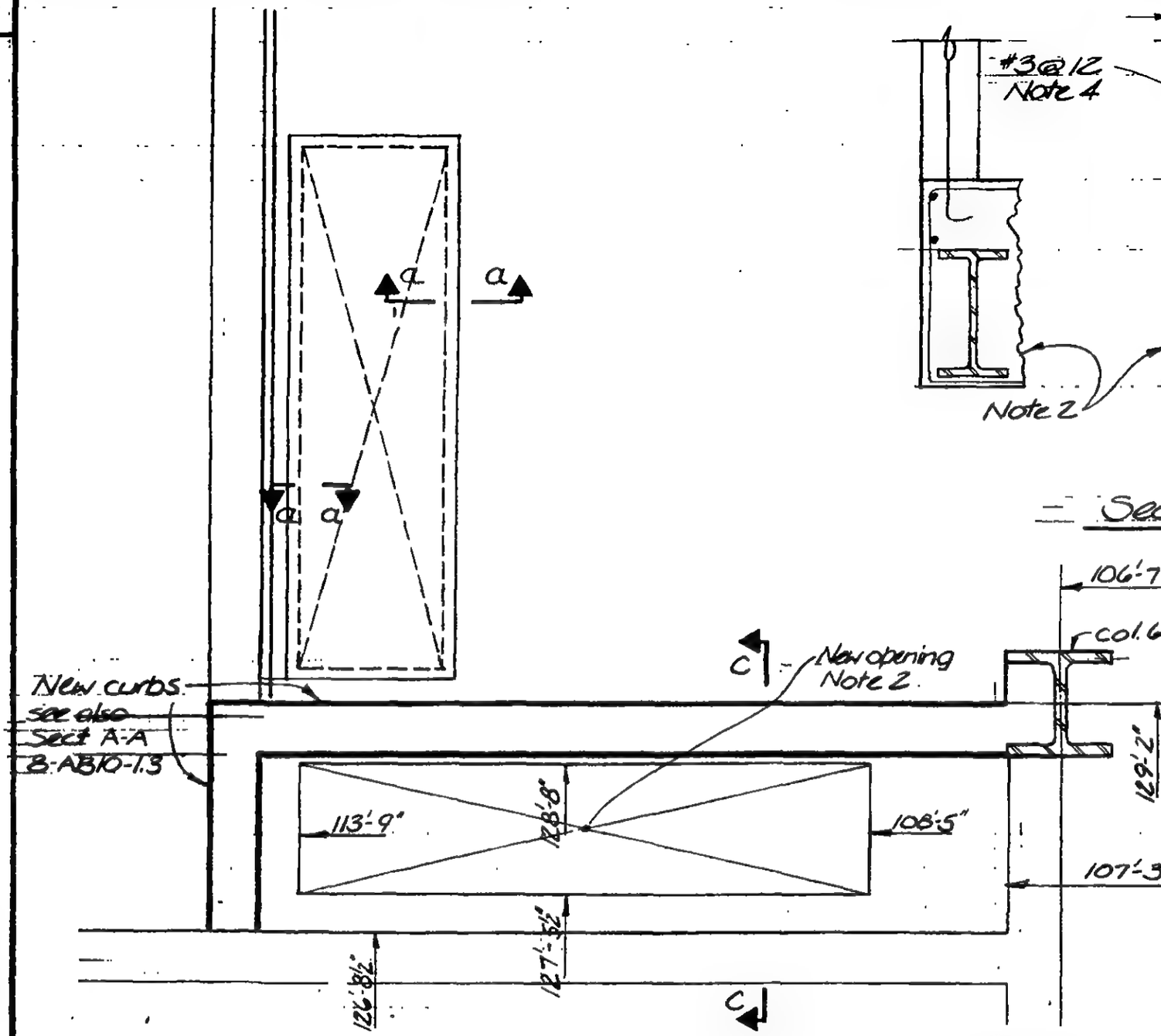

Part Plan 107th Floor

Tower B

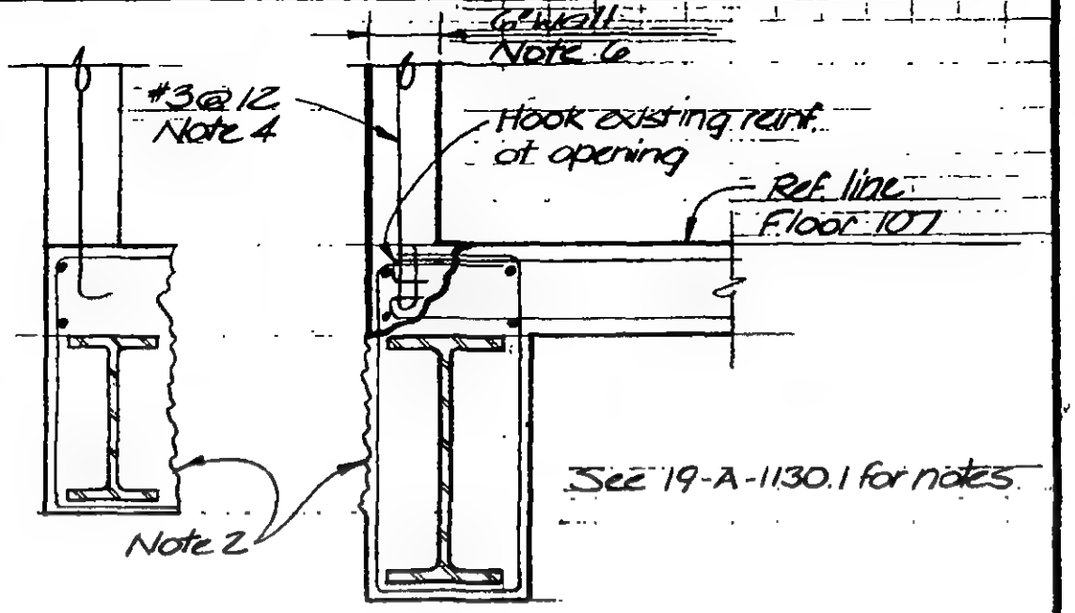

Sect. C-C

LICENSED PROFESSIONAL ENGINEER
LESLIE E. ROBERTSON
No 34360
UNIVERSITY OF THE STATE OF NEW YORK

DESIGNED WAB
DRAWN JB
REVIEWED WAB

19-B-1130.2

SKILLING, HELLE, CHRISTIANSEN, ROBERTSON — Structural & Civil Engineers

PROJECT: THE WORLD TRADE CENTER | TITLE: TOWERS A & B - FLOOR 45 - SLAB OVER OPENINGS | DATE: 8-3-73

REVISIONS

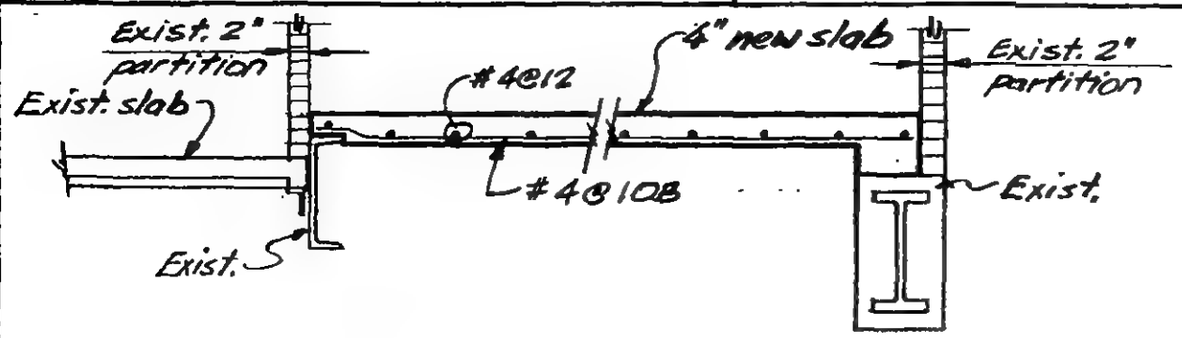

Section a-a

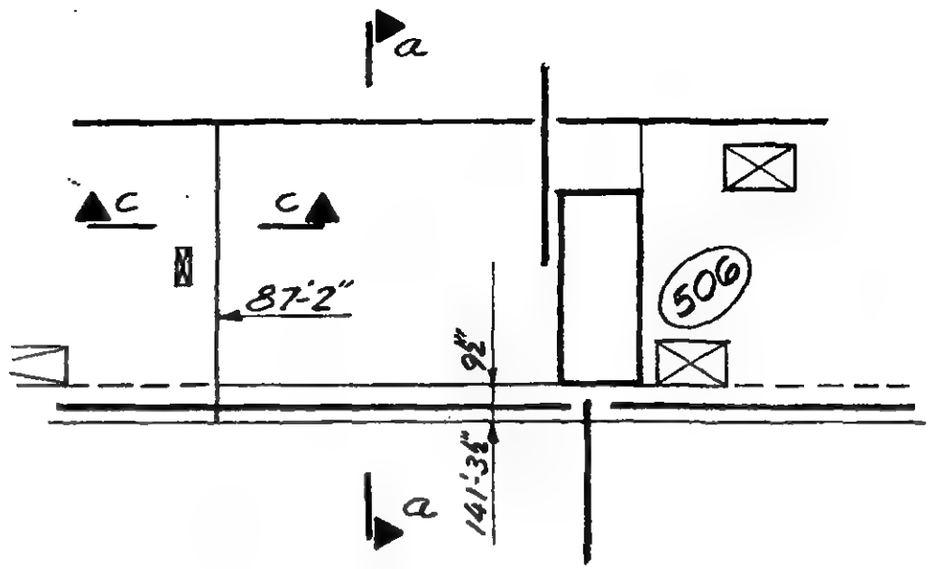

Part Plan 45th Floor Tower A & B

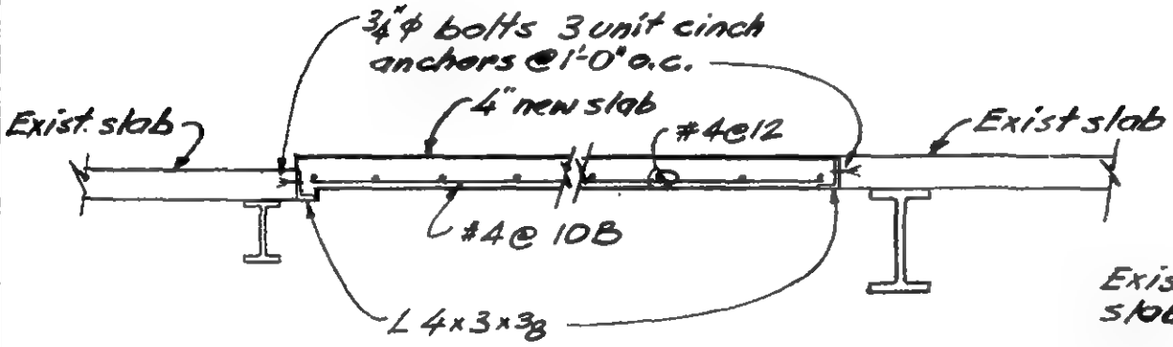

Section b-b

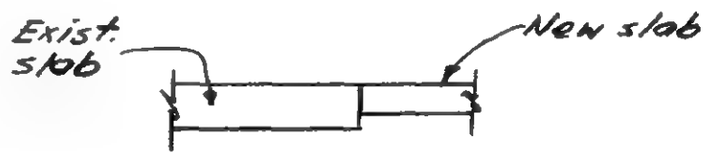

Section c-c

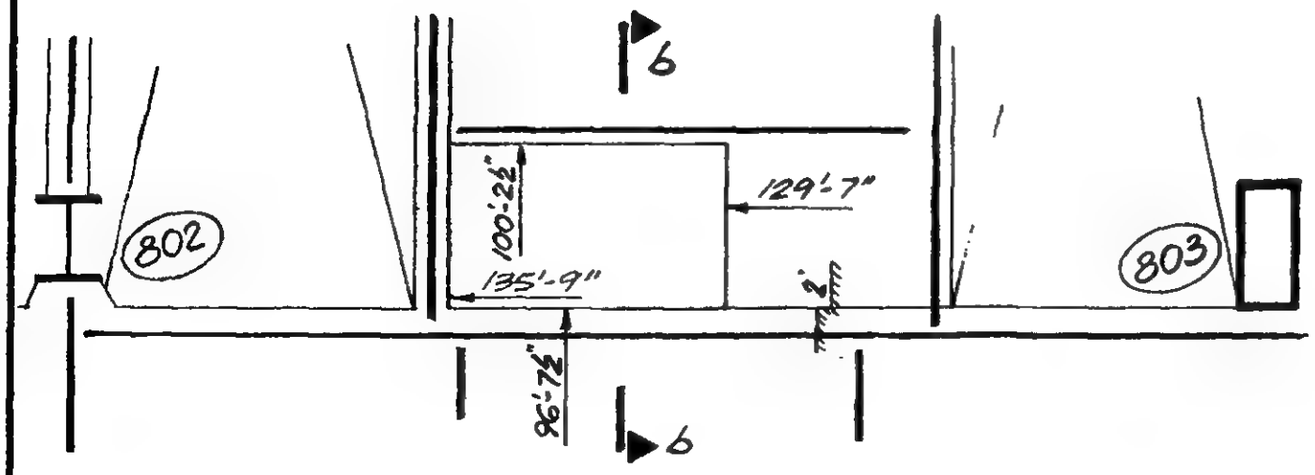

Part Plan 45th Floor Tower A & B

LICENSED PROFESSIONAL ENGINEER — LESLIE E. ROBERTSON — NO. 34360 — UNIVERSITY OF THE STATE OF NEW YORK

DESIGNED: WAB
DRAWN: JG
REVIEWED: JTM

19AB-1131

SKILLING, HELLE, CHRISTIANSEN, ROBERTSON — Structural & Civil Engineers

PROJECT: THE WORLD TRADE CENTER | TITLE: INSTALLATION OF OMITED SLAB-TOWER B-E.1253 | DATE: 8-7-73

REVISIONS

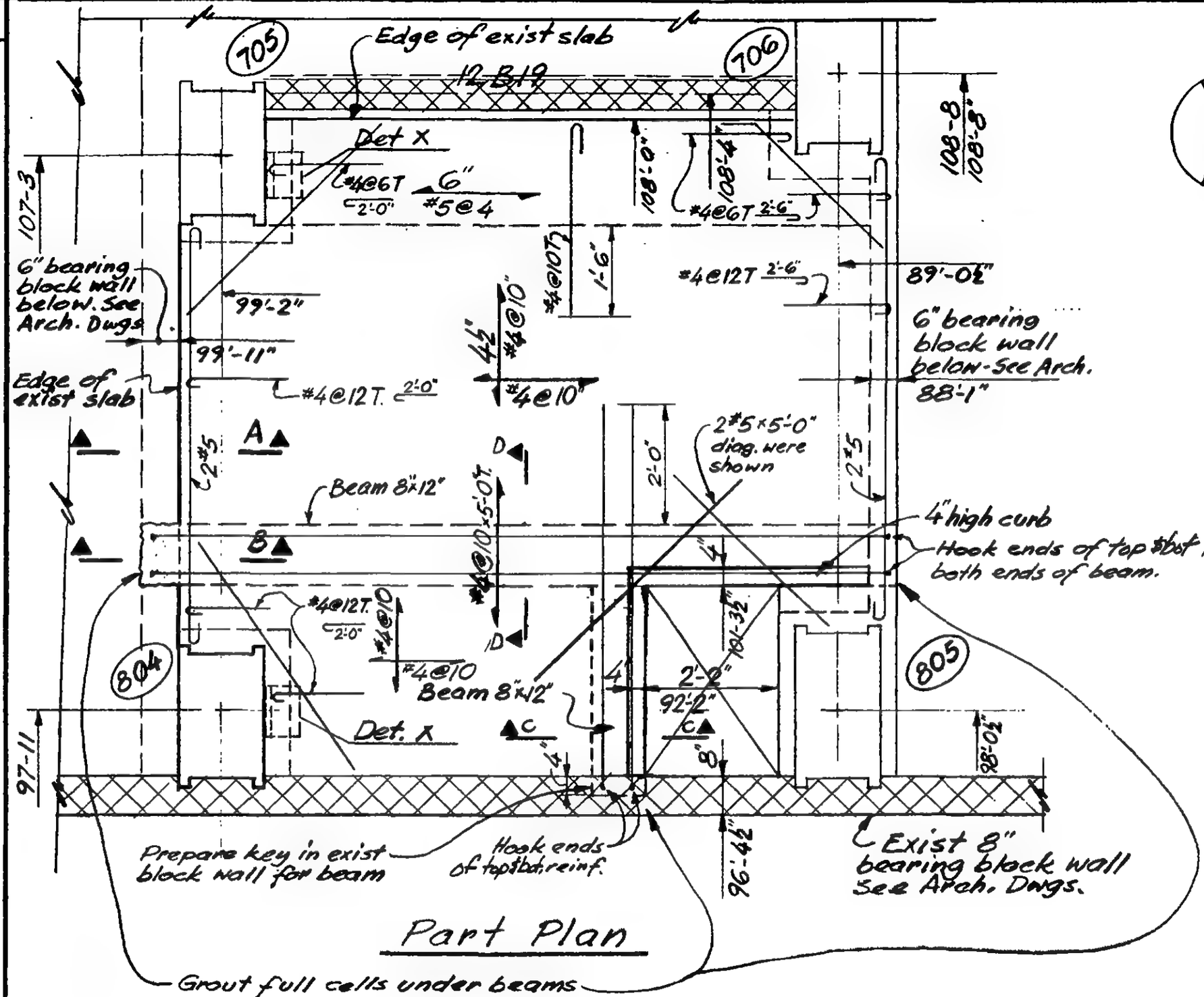

Part Plan

LICENSED PROFESSIONAL ENGINEER — LESLIE E. ROBERTSON — No. 34360 — UNIVERSITY OF THE STATE OF NEW YORK

DESIGNED: JTM
DRAWN: JG
REVIEWED: WAB

19-B-1132.1

SKILLING, HELLE, CHRISTIANSEN, ROBERTSON — Structural & Civil Engineers

PROJECT: THE WORLD TRADE CENTER

TITLE: INSTALLATION OF OMITED SLAB TOWER B El 253

DATE: 8-7-73

REVISIONS

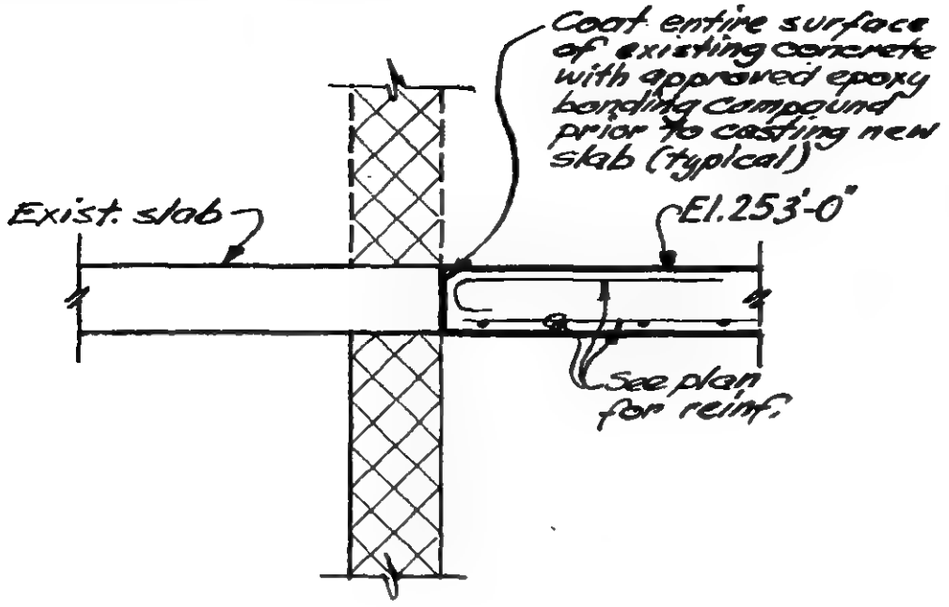

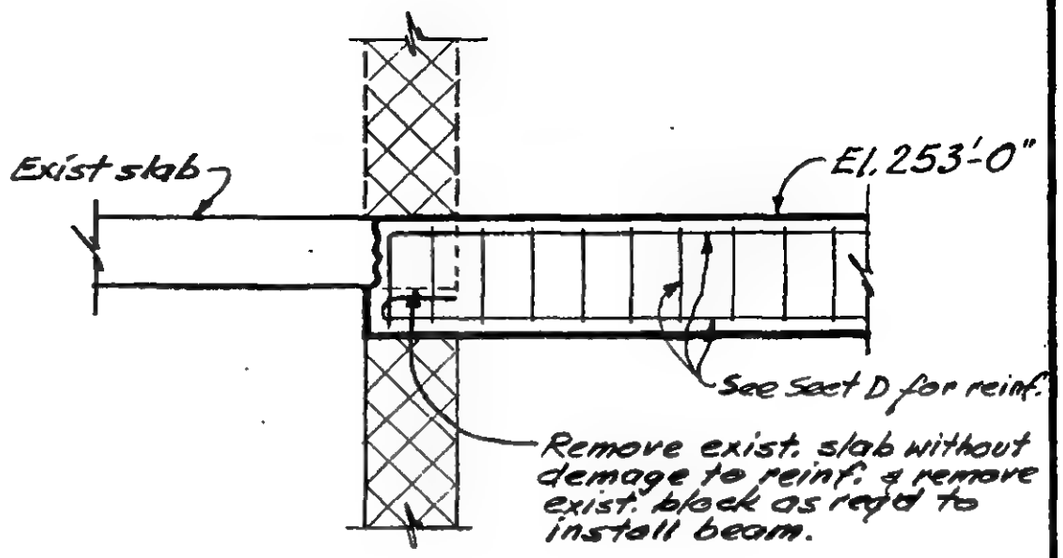

A	B
X	C

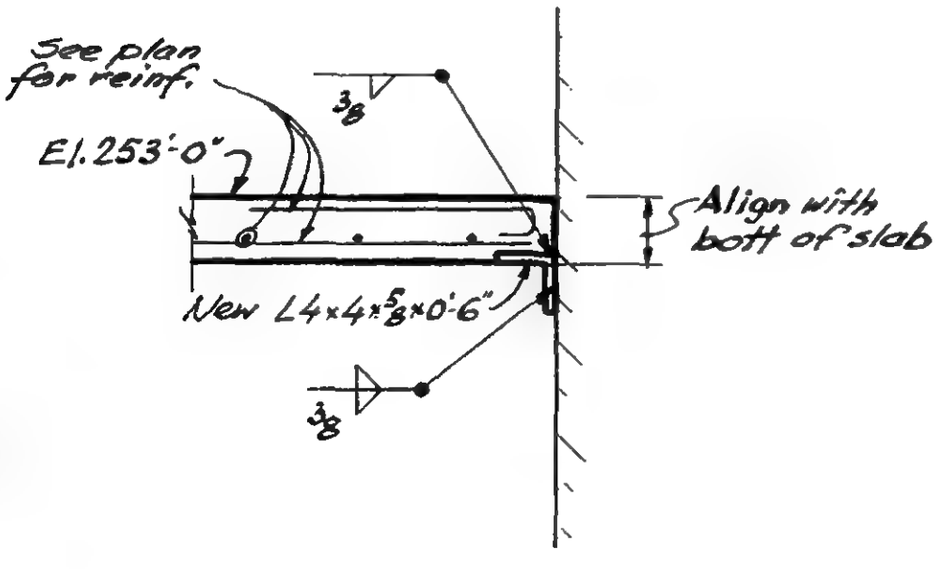

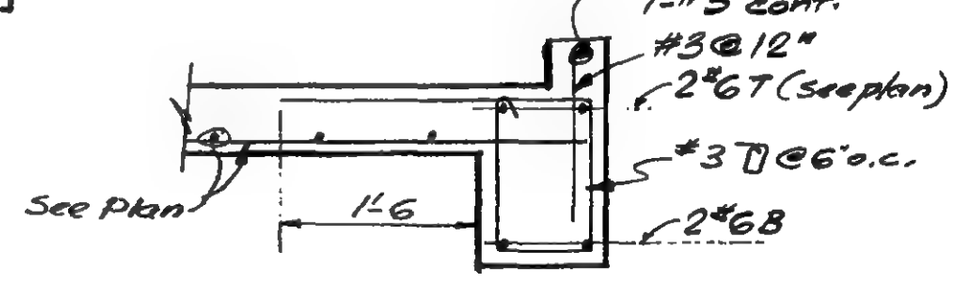

D

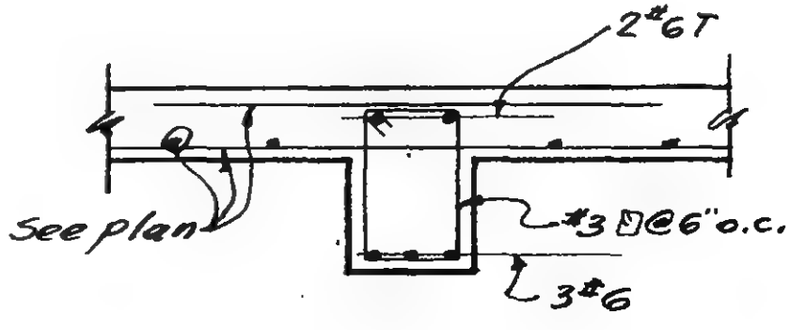

LICENSED PROFESSIONAL ENGINEER — LESLIE E. ROBERTSON — No. 34360 — UNIVERSITY OF THE STATE OF NEW YORK

DESIGNED: JTM

DRAWN: JG

REVIEWED: WAB

19-B-1132.2

SKILLING, HELLE, CHRISTIANSEN, ROBERTSON — Structural & Civil Engineers

PROJECT THE WORLD TRADE CENTER | TITLE CORNER-SLOPING PARAPET-PH- TOWER A & B | DATE 8-9-73

REVISIONS

8-17-73 General Revisions

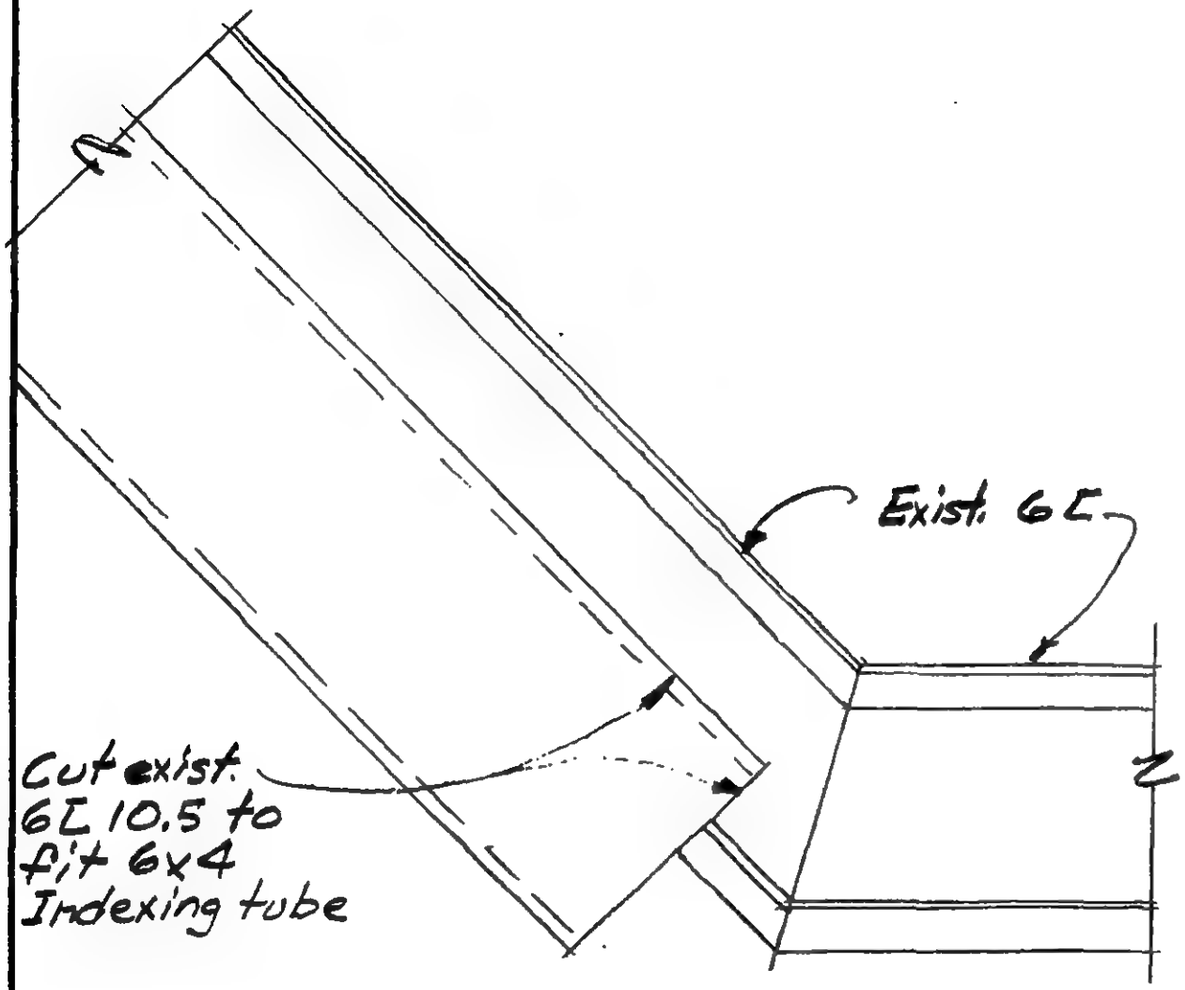

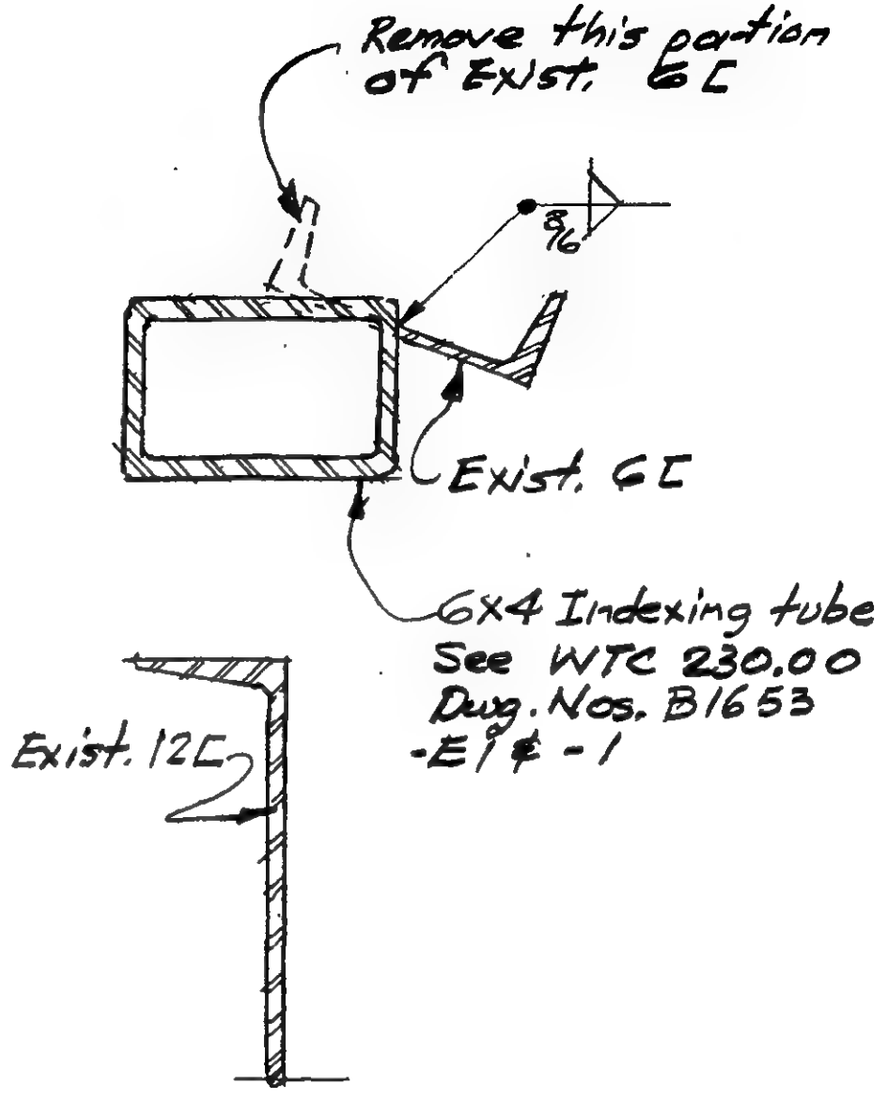

Note: Work with Contract WTC 400.00 Sheet No. W-28 & W-29

LICENSED PROFESSIONAL ENGINEER LESLIE E. ROBERTSON No. 34360 UNIVERSITY OF THE STATE OF NEW YORK

DESIGNED

DRAWN JA

REVIEWED

PLAN A

19-AB-1133

SKILLING, HELLE, CHRISTIANSEN, ROBERTSON — Structural & Civil Engineers

PROJECT THE WORLD TRADE CENTER | TITLE CORNER - SLOPING PARAPET - PH - TOWER A & B | DATE 8-9-73

REVISIONS

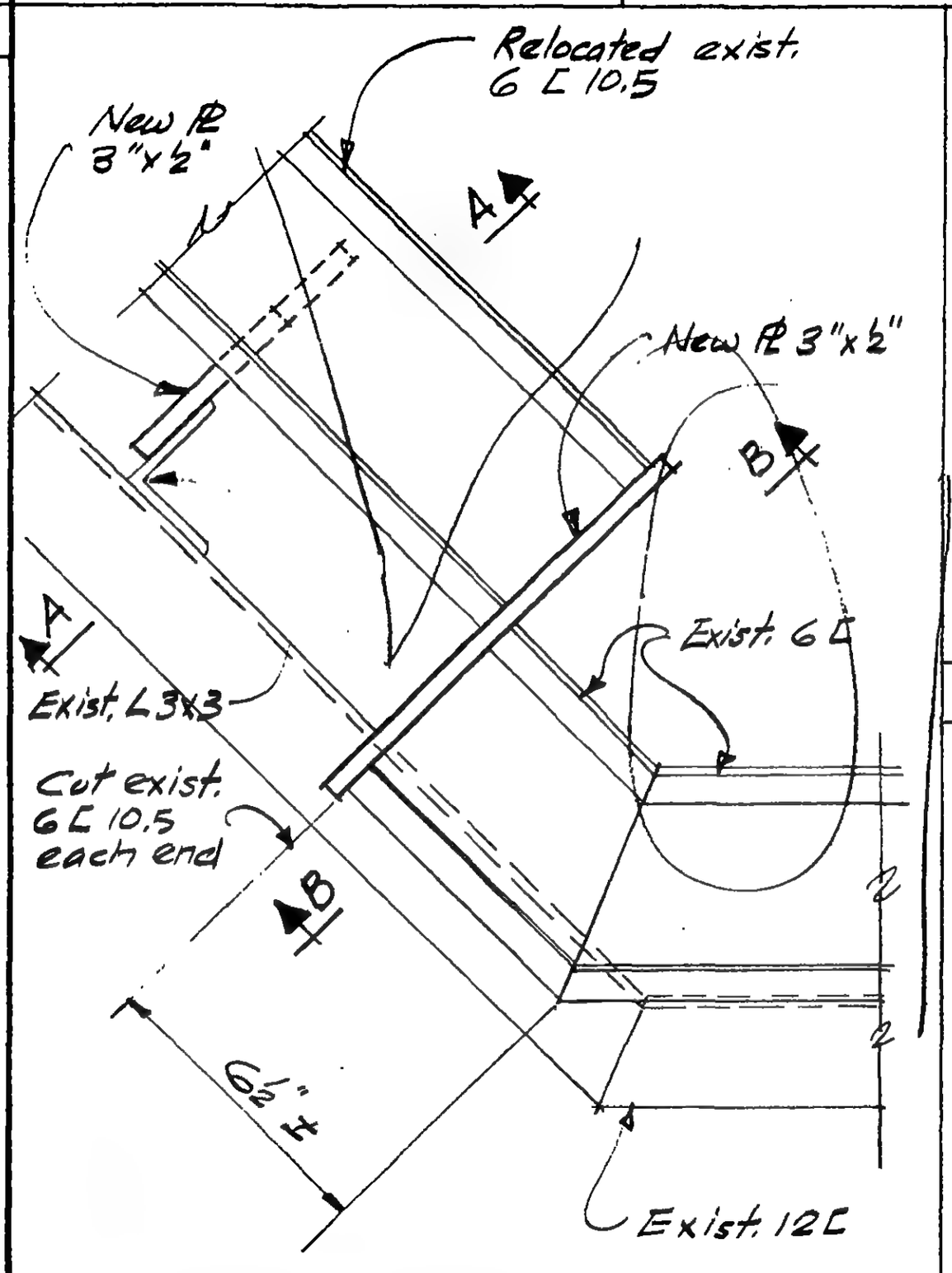

Note: Work with Contract WTC 40000 Sheet No. W-28 & W-29

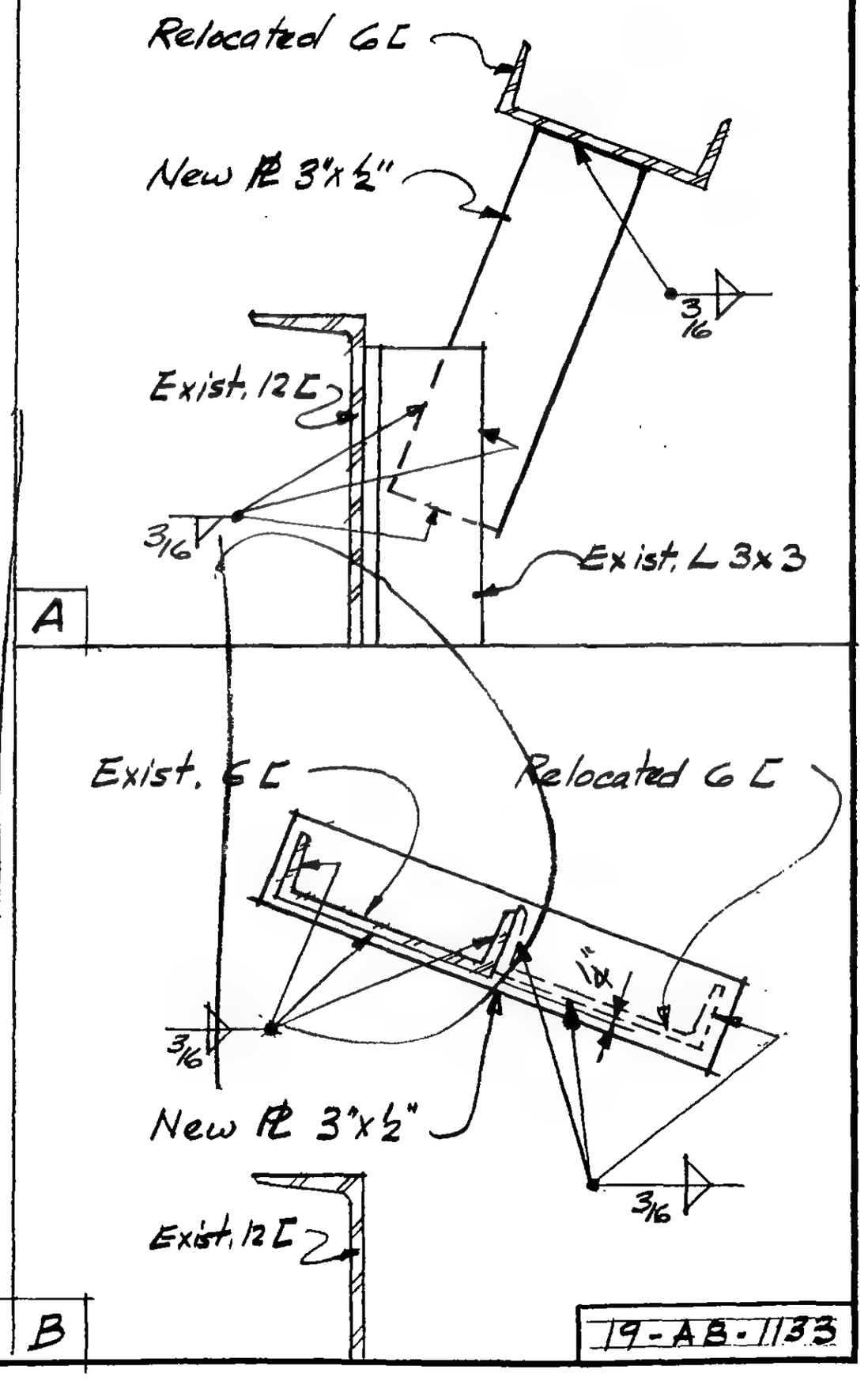

PLAN B

19-AB-1133

LICENSED PROFESSIONAL ENGINEER — LESLIE E. ROBERTSON — No. 34360 — UNIVERSITY OF THE STATE OF NEW YORK

DESIGNED

DRAWN JA

REVIEWED WAB

SKILLING, HELLE, CHRISTIANSEN, ROBERTSON — Structural & Civil Engineers

PROJECT: THE WORLD TRADE CENTER | TITLE: BEAM DETAIL & CONNECTION AT ESCALATOR FL. 110 | DATE: 8-16-73

REVISIONS

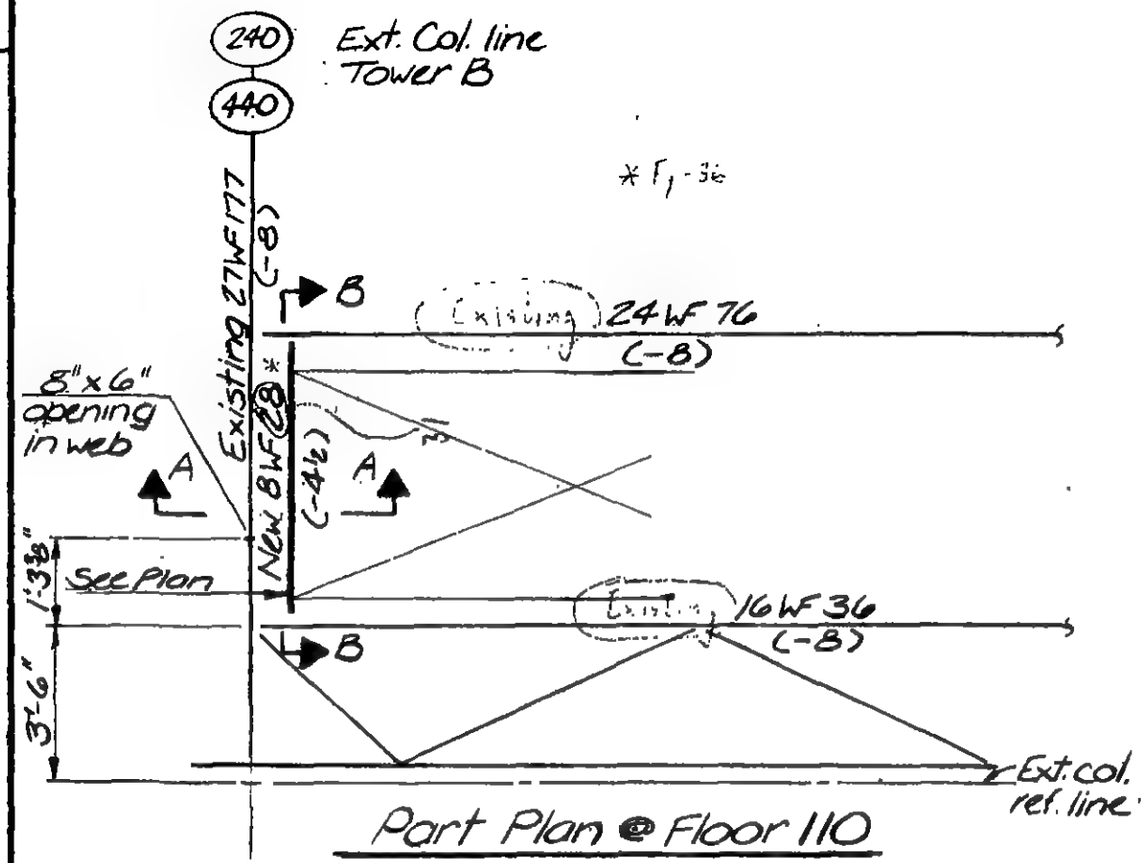

Part Plan @ Floor 110

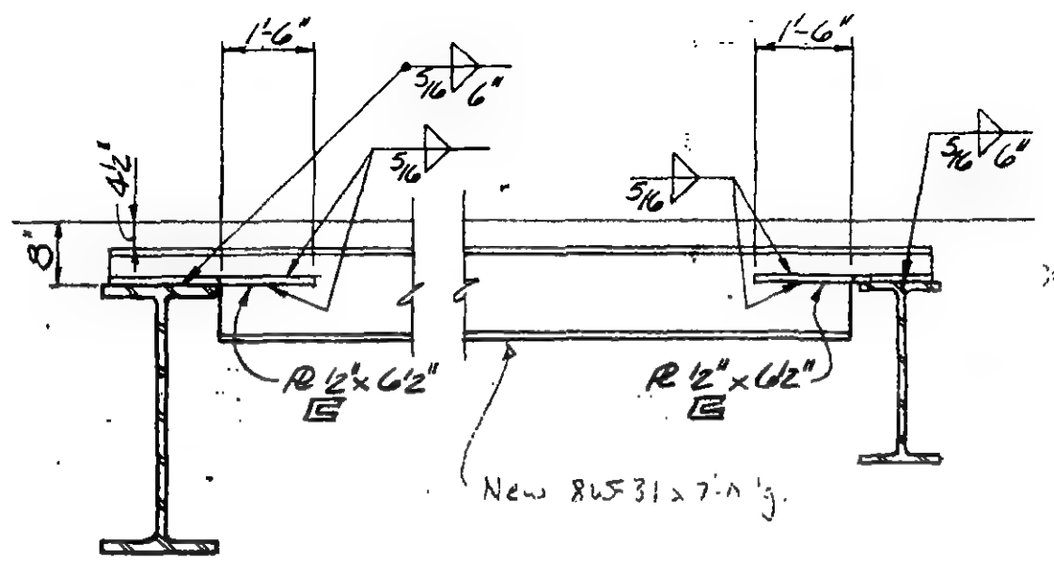

Section B-B

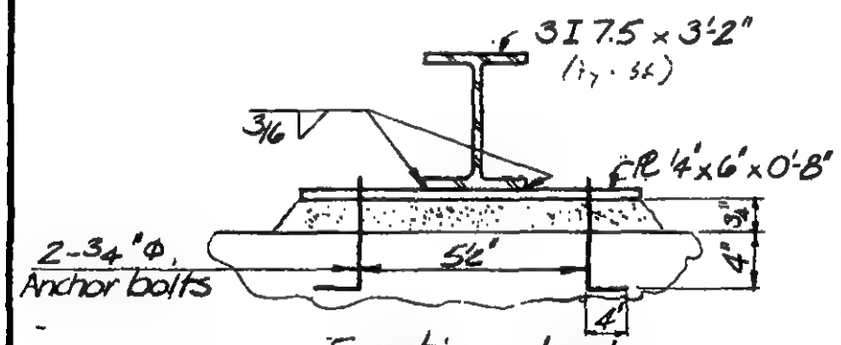

Section b-b

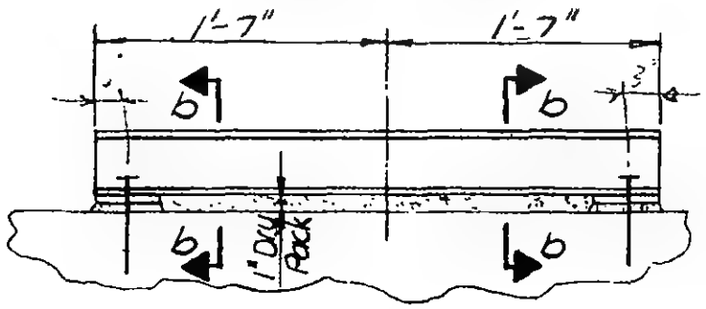

Section a-a

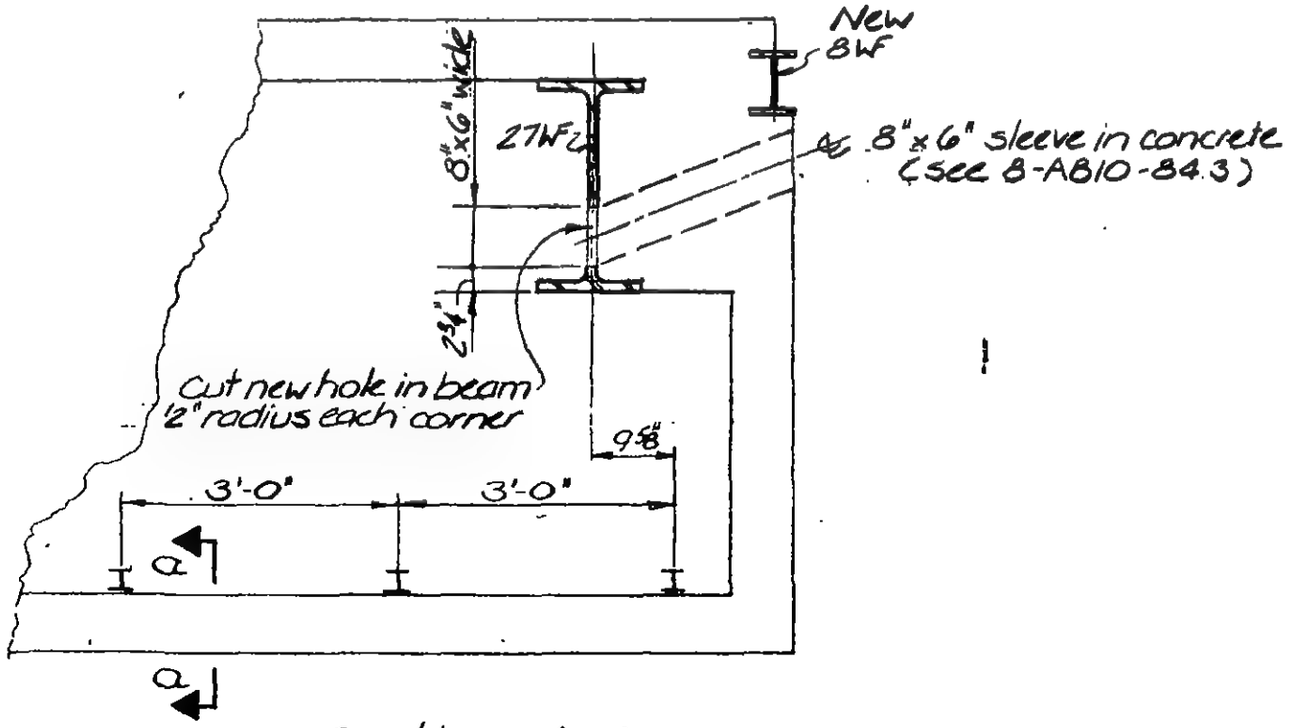

Section A-A

LICENSED PROFESSIONAL ENGINEER — LESLIE E. ROBERTSON — No 34360 — UNIVERSITY OF THE STATE OF NEW YORK

DESIGNED K.J. Chiang

DRAWN J. Banks

REVIEWED WAB

19-8-1135

SKILLING, HELLE, CHRISTIANSEN, ROBERTSON — Structural & Civil Engineers

PROJECT THE WORLD TRADE CENTER | TITLE BEAM DETAIL & CONNECTION AT ESCALATOR FL. 110 | DATE 8-16-73

REVISIONS

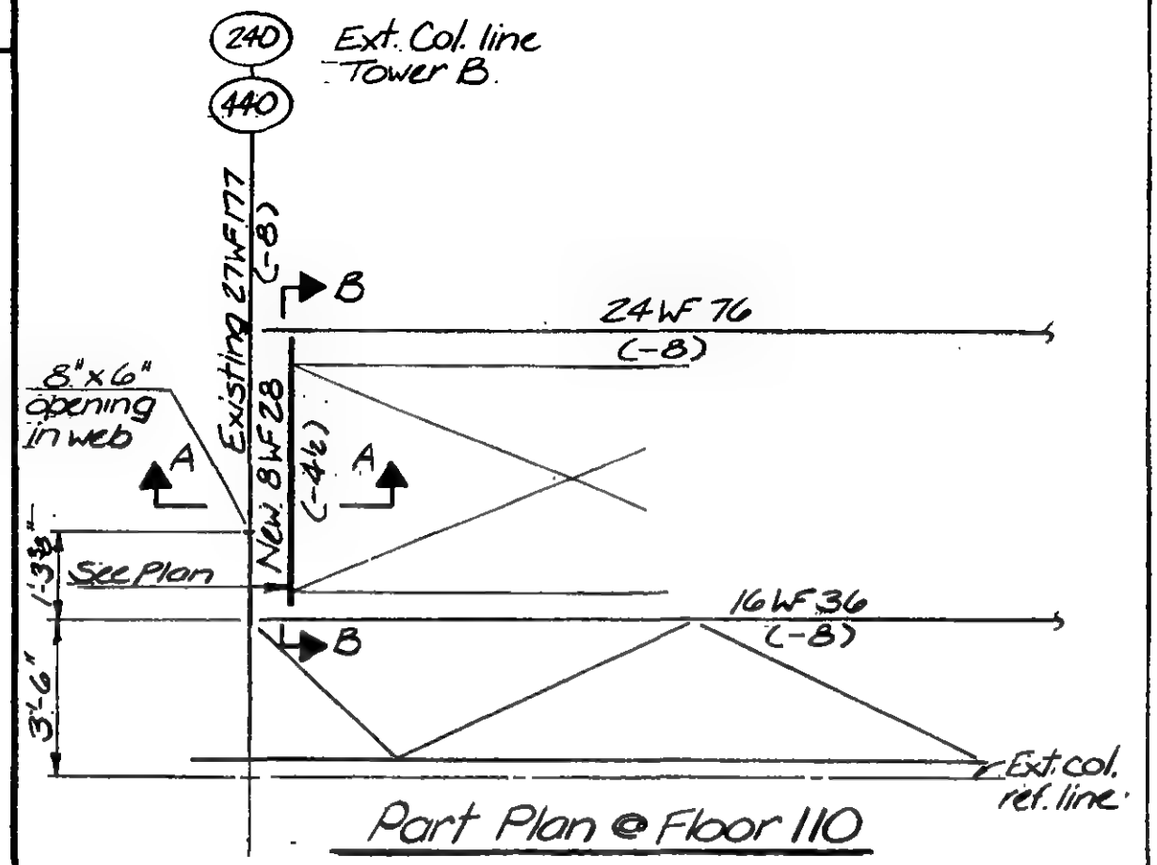

Part Plan @ Floor 110

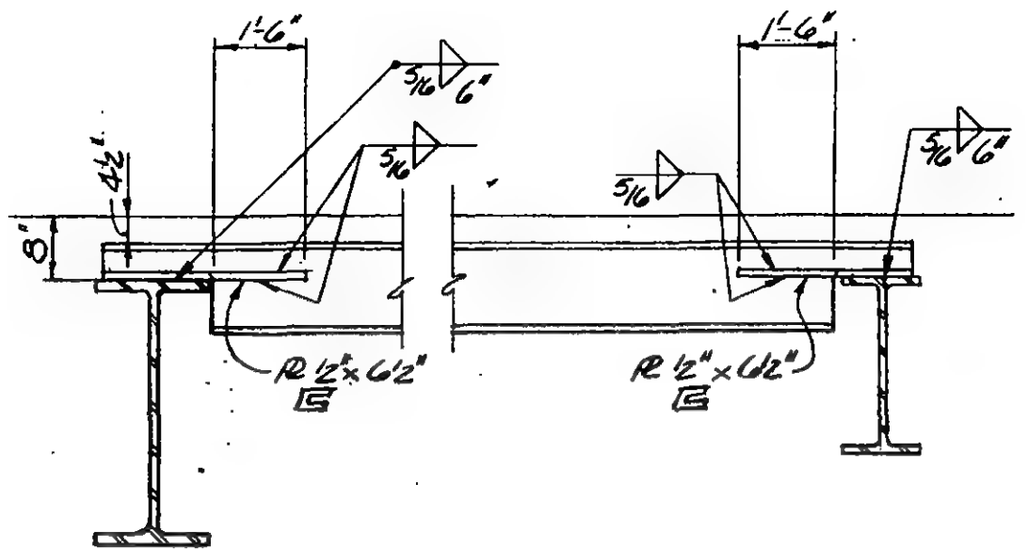

Section B-B

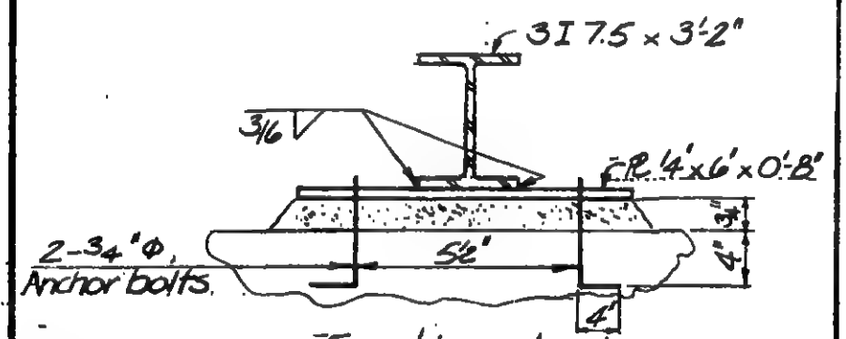

Section b-b

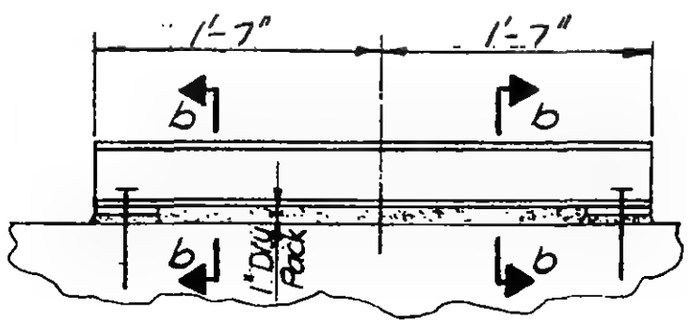

Section a-a

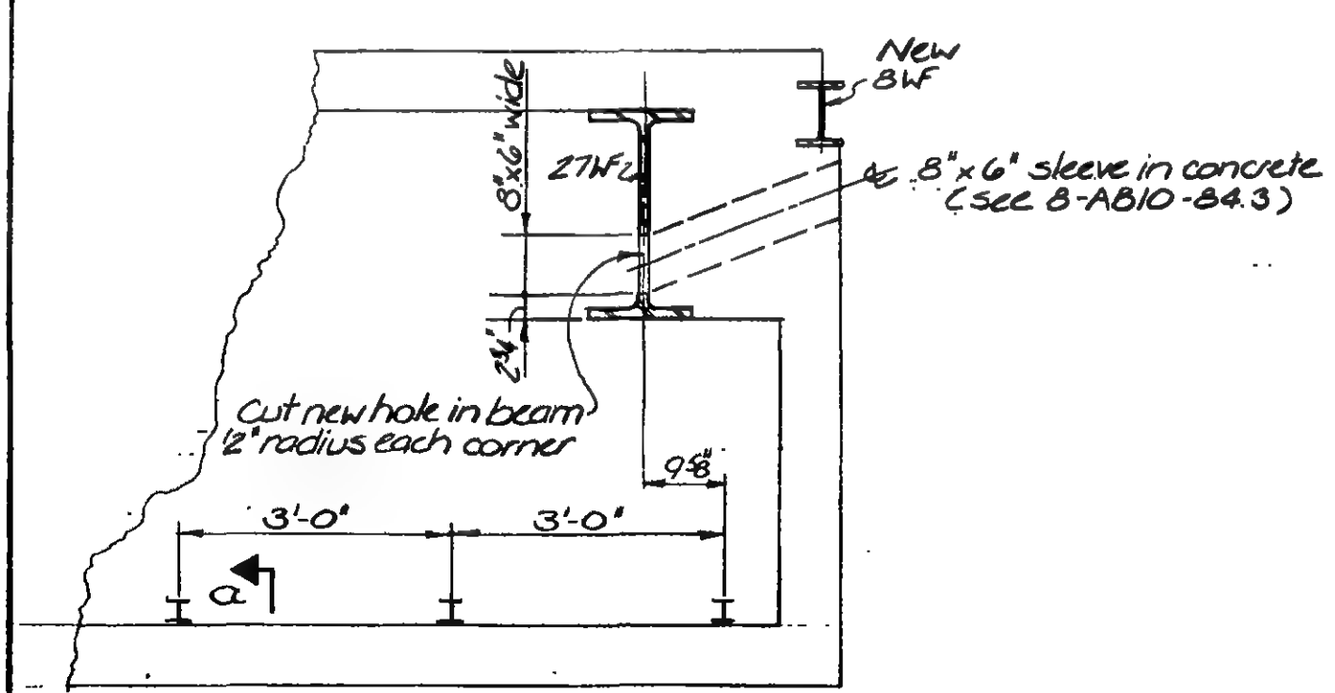

Section A-A

LICENSED PROFESSIONAL ENGINEER — LESLIE E. ROBERTSON — No. 34960 — UNIVERSITY OF THE STATE OF NEW YORK

DESIGNED J. Chiang

DRAWN T. Banks

REVIEWED

19-B-1135

SKILLING, HELLE, CHRISTIANSEN, ROBERTSON — Structural & Civil Engineers

PROJECT: THE WORLD TRADE CENTER | TITLE: SHAFT WALL ANCHORAGE DETAIL | DATE: 9-24-73

REVISIONS

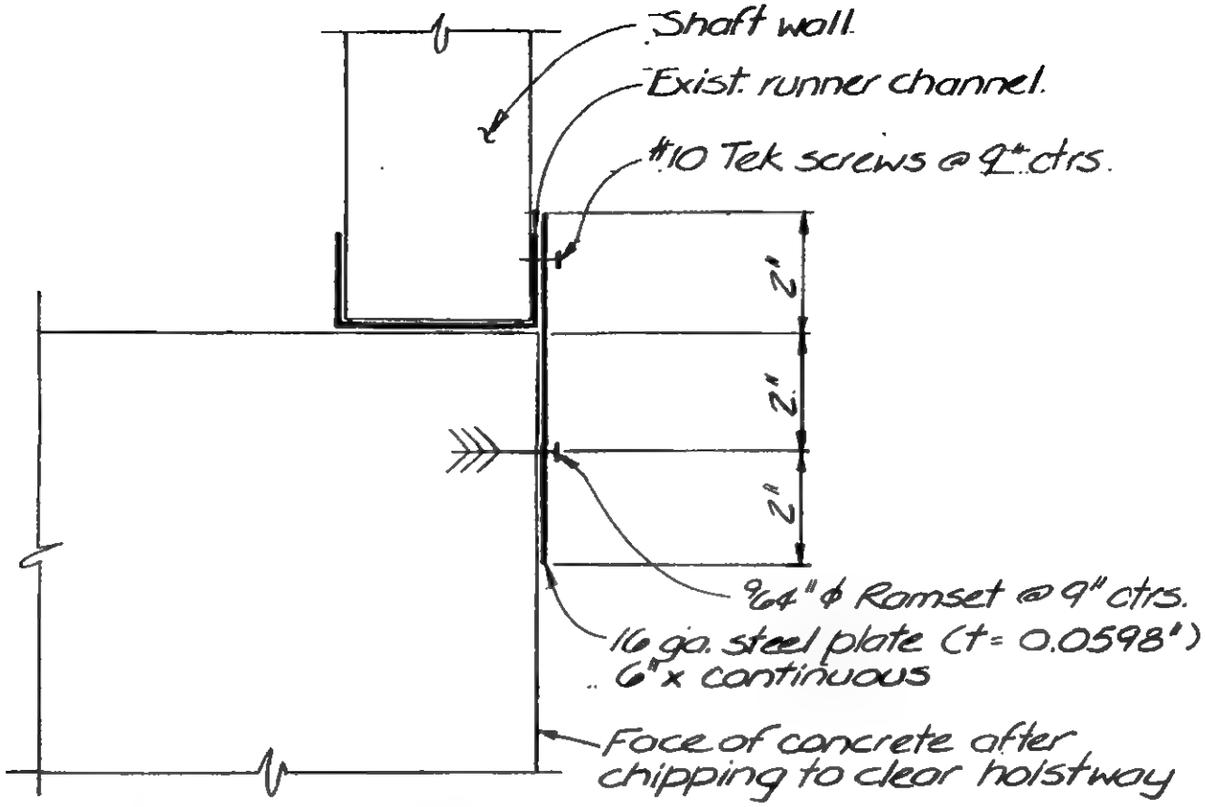

Tower B - Passenger Elevators #18 & 19
Detail at Bottom of Partition at shaft Opening.

Notes:
1. Detail at top of partition similar
2. Use this detail only at locations directed by Engineer

LICENSED PROFESSIONAL ENGINEER — LESLIE E. ROBERTSON — No. 34360 — UNIVERSITY OF THE STATE OF NEW YORK

DESIGNED J.T.M
DRAWN J. Banks
REVIEWED J.T.M

19-B-1136

SKILLING, HELLE, CHRISTIANSEN, ROBERTSON — Structural & Civil Engineers

PROJECT: THE WORLD TRADE CENTER | TITLE: DUMBWAITER MACHINE SUPPORT-FLOOR 108 | DATE: 12-28-73

REVISIONS

1 - 3-74

6-26-74

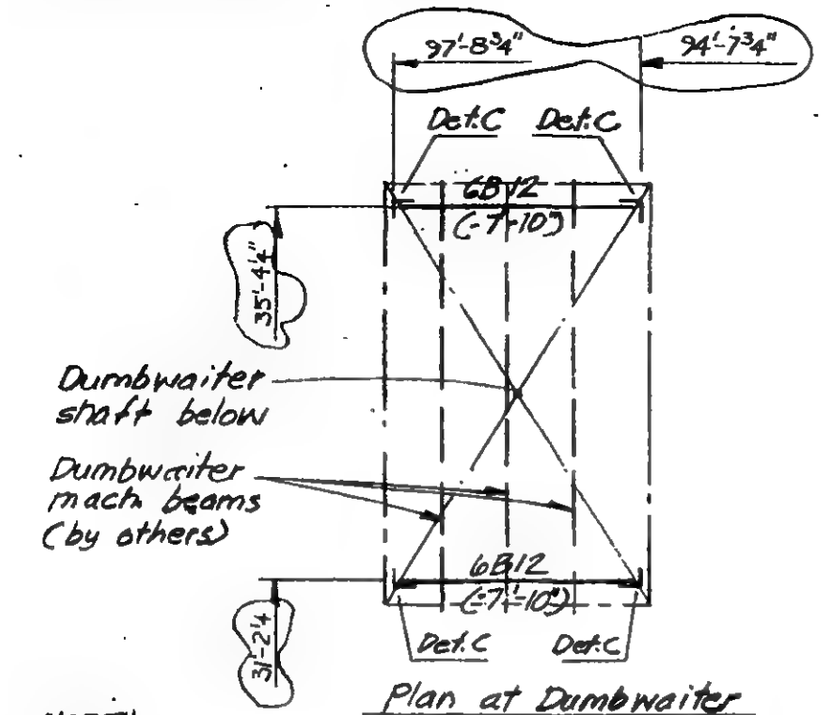

Plan at Dumbwaiter Machine Level

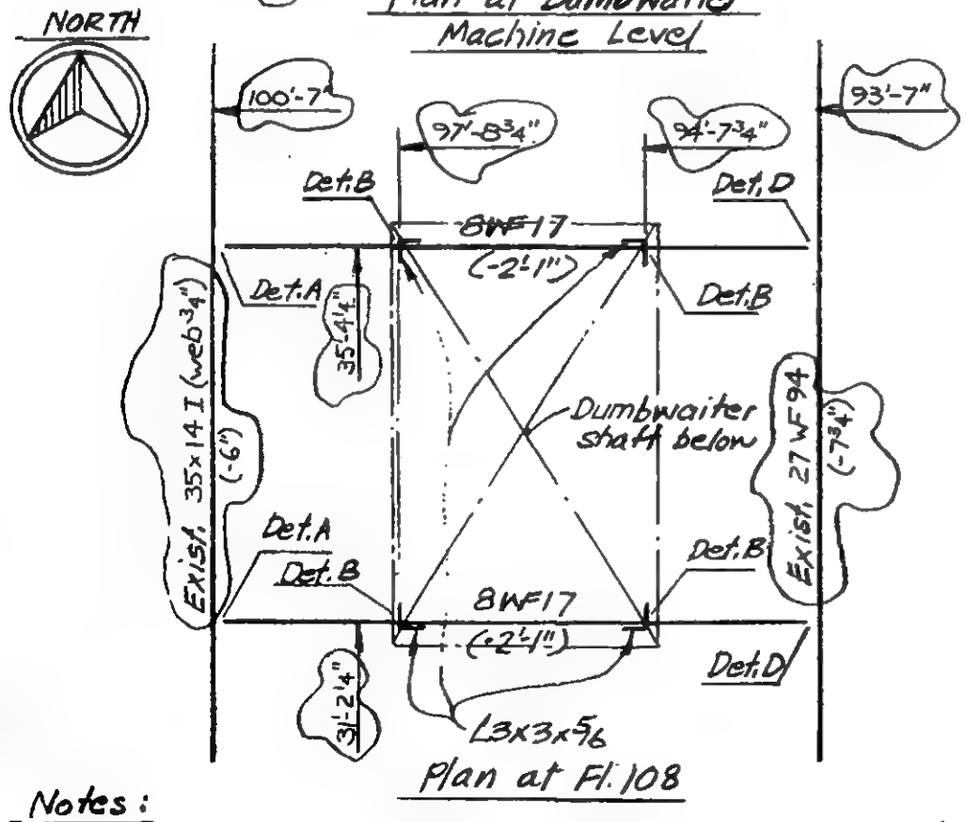

Plan at Fl. 108

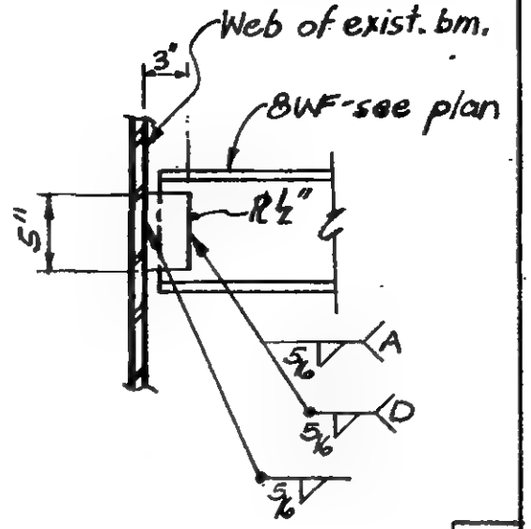

A
D

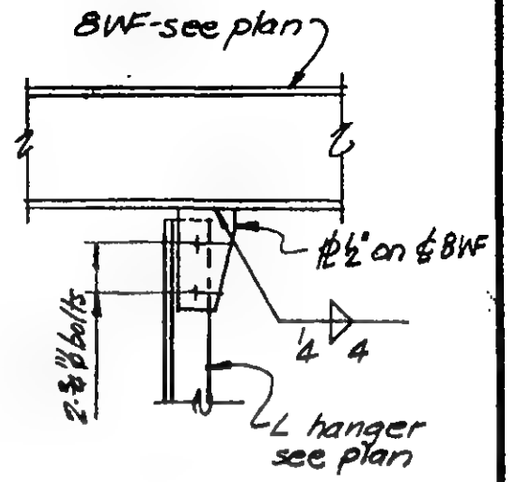

B

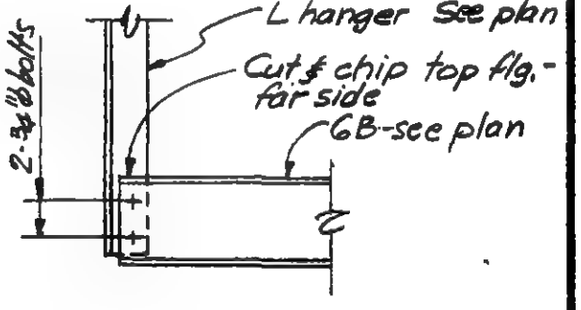

C

Notes:

1. Verify dimensions and location of existing beams in field before fabrication of new work.
2. Top of beam elevations are given thus (-2'-1") from reference Fl. 108, El. 1631'-10", Tower A

LICENSED PROFESSIONAL ENGINEER — LESLIE E. ROBERTSON — No. 34360 — UNIVERSITY OF THE STATE OF NEW YORK

DESIGNED JTM

DRAWN

REVIEWED WAB

19-A-1137

SKILLING, HELLE, CHRISTIANSEN, ROBERTSON — Structural & Civil Engineers

PROJECT THE WORLD TRADE CENTER | TITLE NEW BEAM OPENING - TOWER B - FLOOR 107 | DATE 1-15-74

REVISIONS

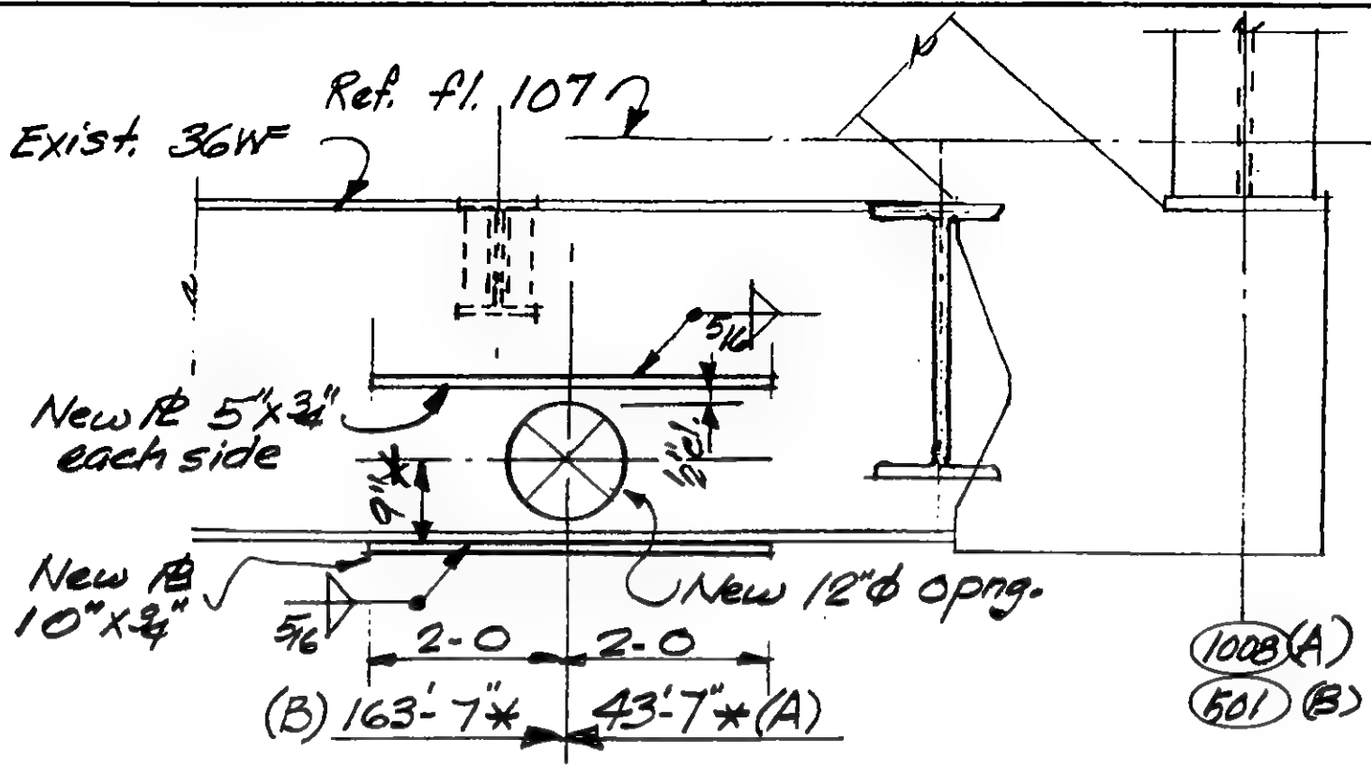

Note: Weld new plates to beam before cutting new opening

* Varify in field to align opening with existing pipe

A
B

KEY PLAN

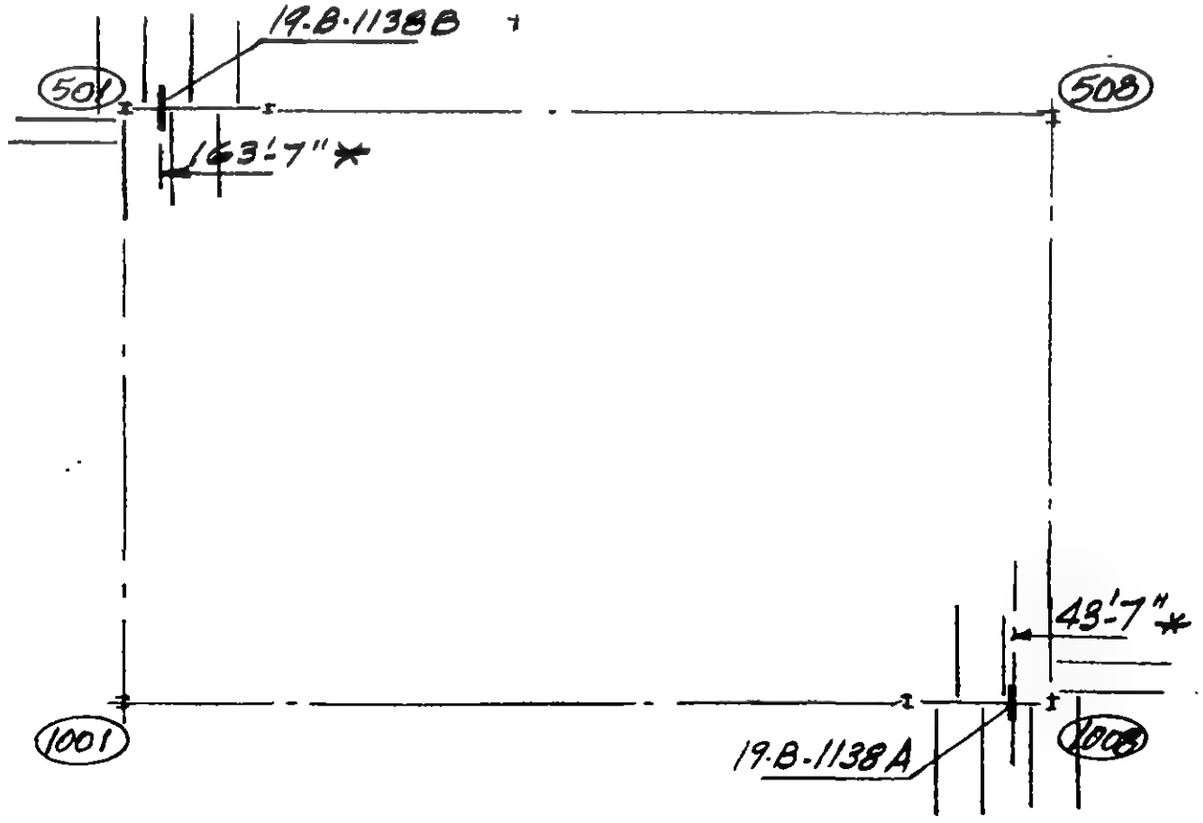

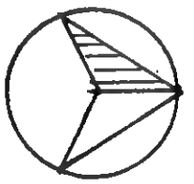

Ref: SB-115
Framing Plan
Floor 107

LICENSED PROFESSIONAL ENGINEER
LESLIE E. ROBERTSON
No. 34360
UNIVERSITY OF THE STATE OF NEW YORK

DESIGNED

DRAWN

REVIEWED WAB

19-B-1138

LEGEND

RB	=	REINFORCE BEAM	999 ← LERA JOB #
RC	=	COLUMN	↳ see Master Job list
RT	=	TRUSS	& Drawing List&
RO	=	OPENING	for information.
RS	=	SLAB	regarding structural
RCN	=	CONNECTION	reinforcing

SKILLING, HELLE, CHRISTIANSEN, ROBERTSON — Structural & Civil Engineers

PROJECT: THE WORLD TRADE CENTER

TITLE: REINFORCEMENT FOR 9 FAN CASINGS, 75TH FLOOR, TOWER A

DATE: 2-1-74

REVISIONS

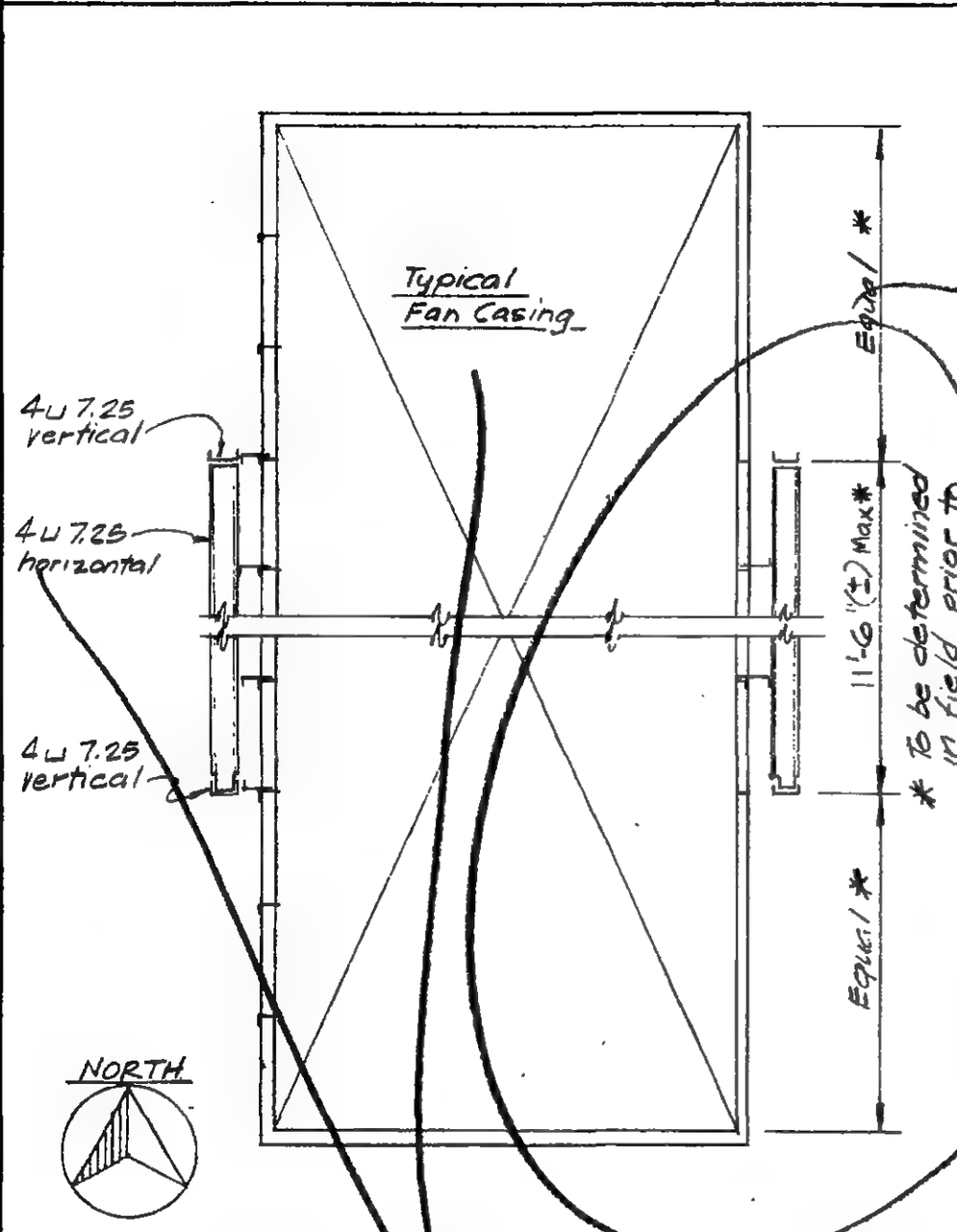

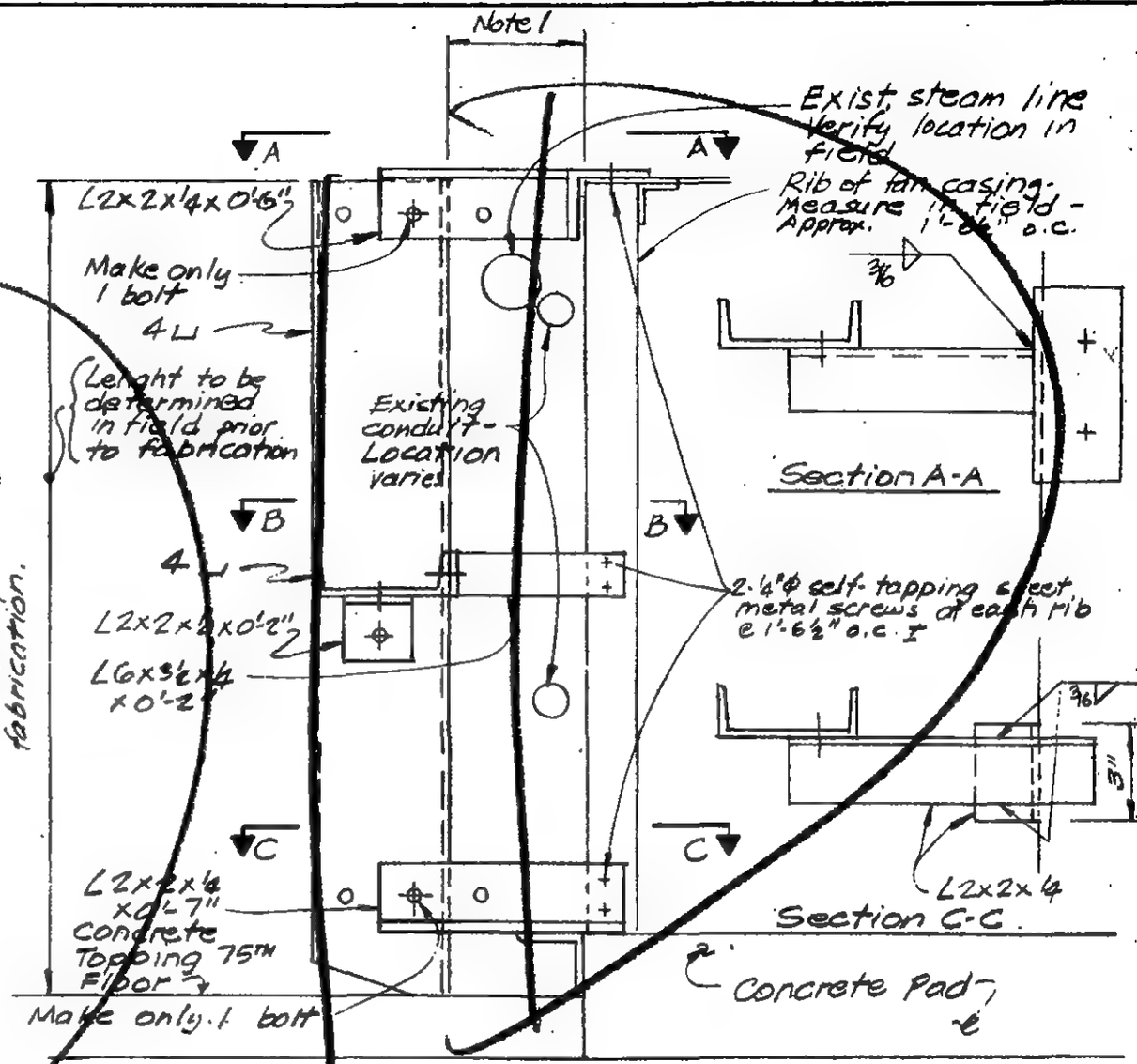

Note 1 - Make this dimension as small as possible to clear exist. conduit & steam line.

Note 2 - All angles to be 2x2x1/4 unless shown otherwise

Note 3 - All bolts to be 1/2" ϕ A325-F.

Reinforcement frame to be constructed at following locations - One frame each side of housing consisting of two vertical 4 C 7.25 members with one horizontal 4 C 7.25 member between.)

ACS 75-1 ACS 75-2 ACS 75-3 ACS 75-5
ACS 75-6 ACS 75-7 ACS 75-9 ACS 75-10
ACS 75-11 - 9 housings, 2 frames each housing for a total of 18 frames

2-25-74

PNYA letter to TRCC from L. Feld

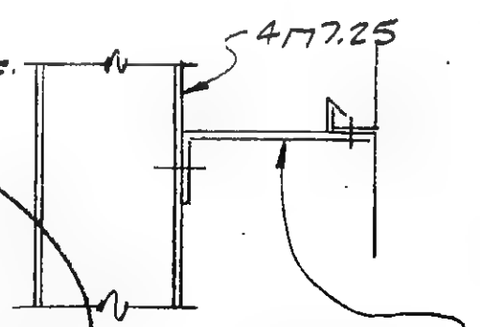

LICENSED PROFESSIONAL ENGINEER — LESLIE E. ROBERTSON — No. 34360 — UNIVERSITY OF THE STATE OF NEW YORK

DESIGNED AR

DRAWN

REVIEWED TM

19-A-1139

SKILLING, HELLE, CHRISTIANSEN, ROBERTSON — Structural & Civil Engineers

PROJECT THE WORLD TRADE CENTER

TITLE REPAIR DETAIL, TOWER B, OBSERVATION DECK, ESCALATORS B-110 & D-110, ENCLOSURE WALLS AT DOORWAY

DATE 2-27-74

REVISIONS

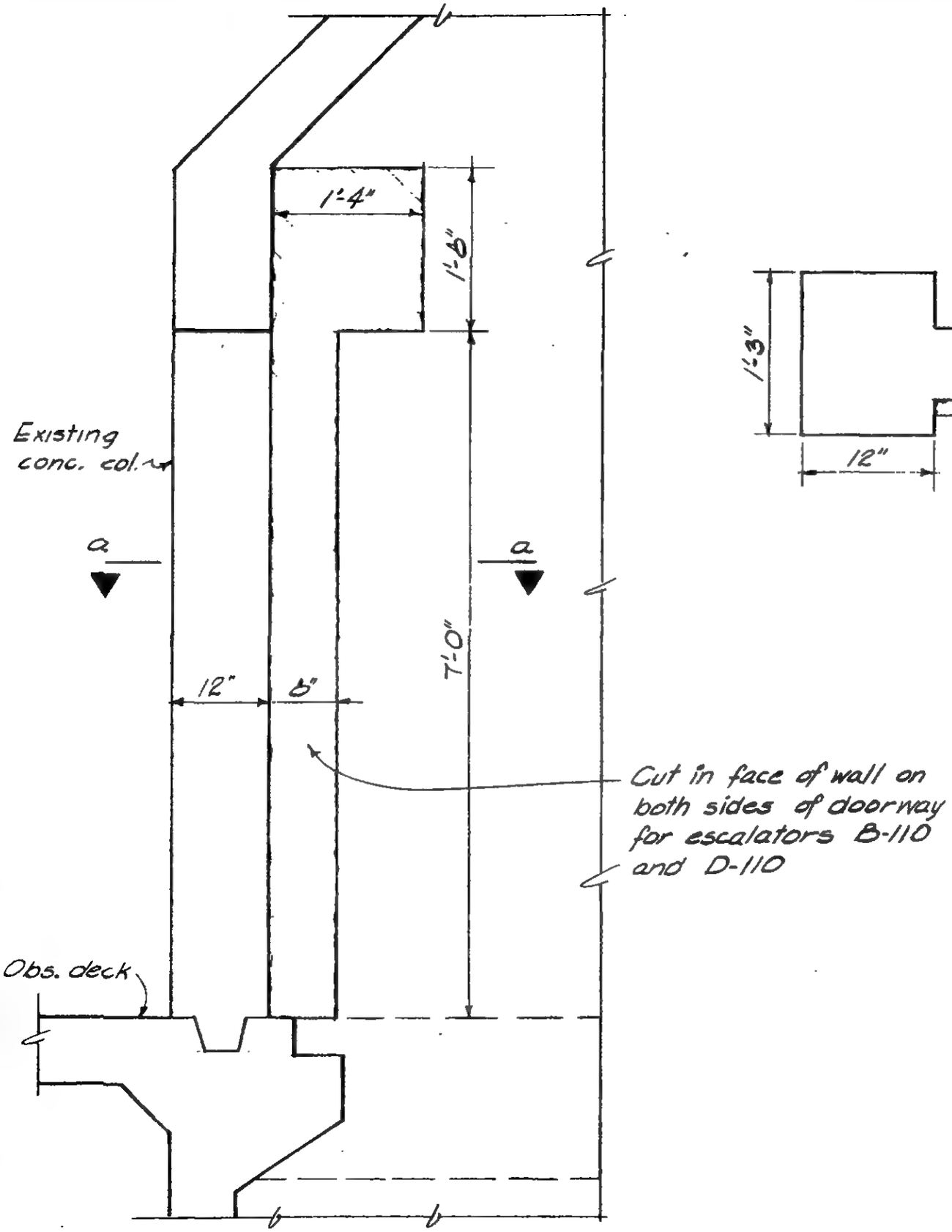

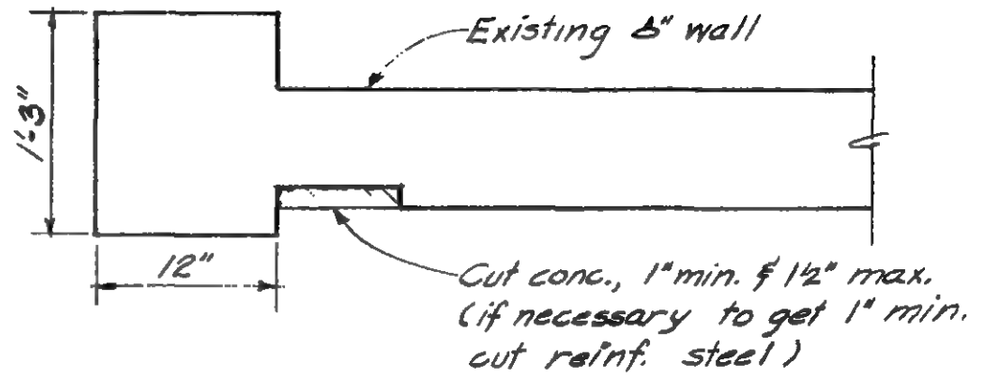

Section a-a

LICENSED PROFESSIONAL ENGINEER LESLIE E. ROBERTSON No 34360 UNIVERSITY OF THE STATE OF NEW YORK

DESIGNED AR

DRAWN DJB

REVIEWED JTM

19-B-1140

SKILLING, HELLE, CHRISTIANSEN, ROBERTSON — Structural & Civil Engineers

PROJECT: THE WORLD TRADE CENTER | TITLE: TOWER A - FLOOR 45 | DATE: 2-28-74

REVISIONS

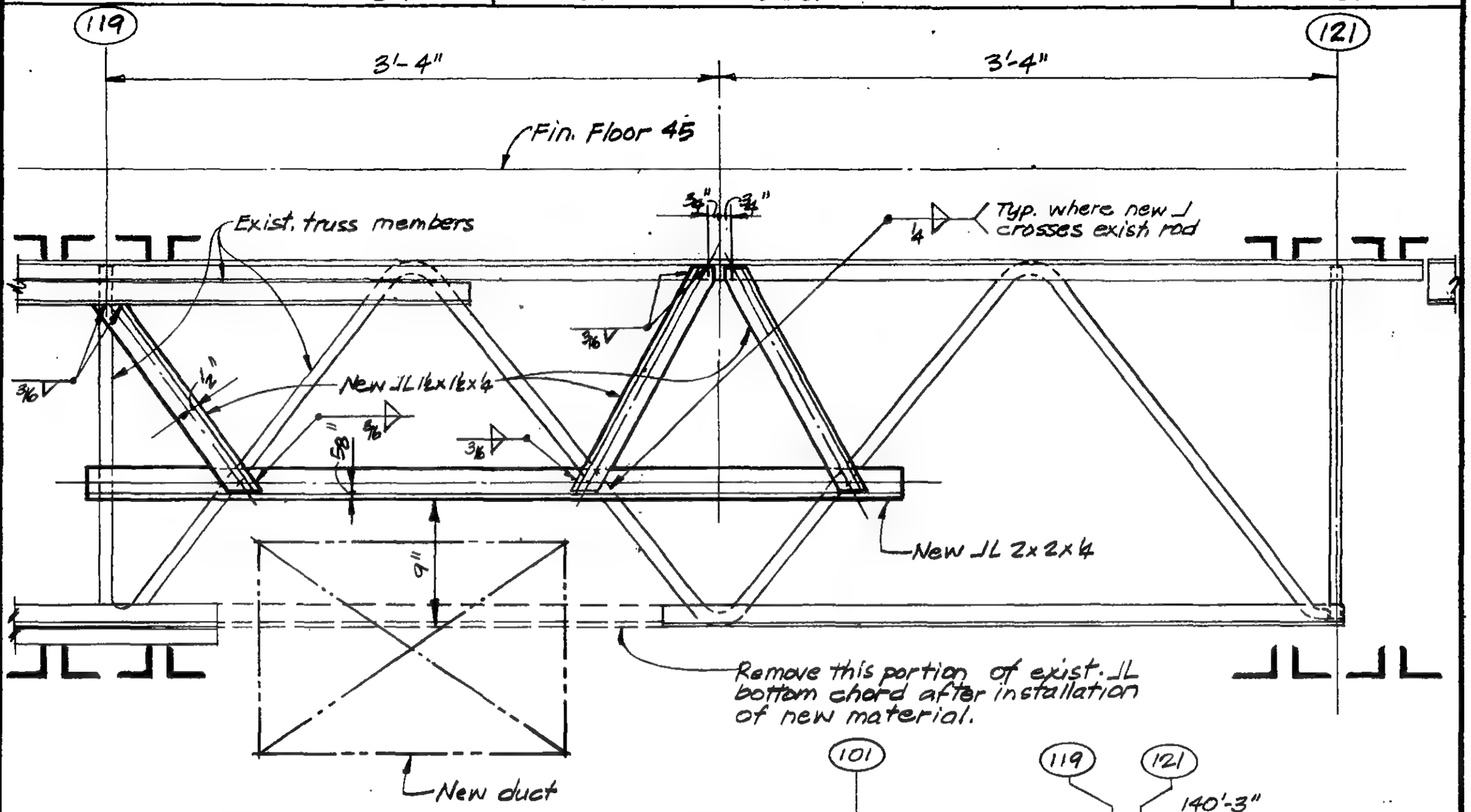

Section A-A
line (450) only

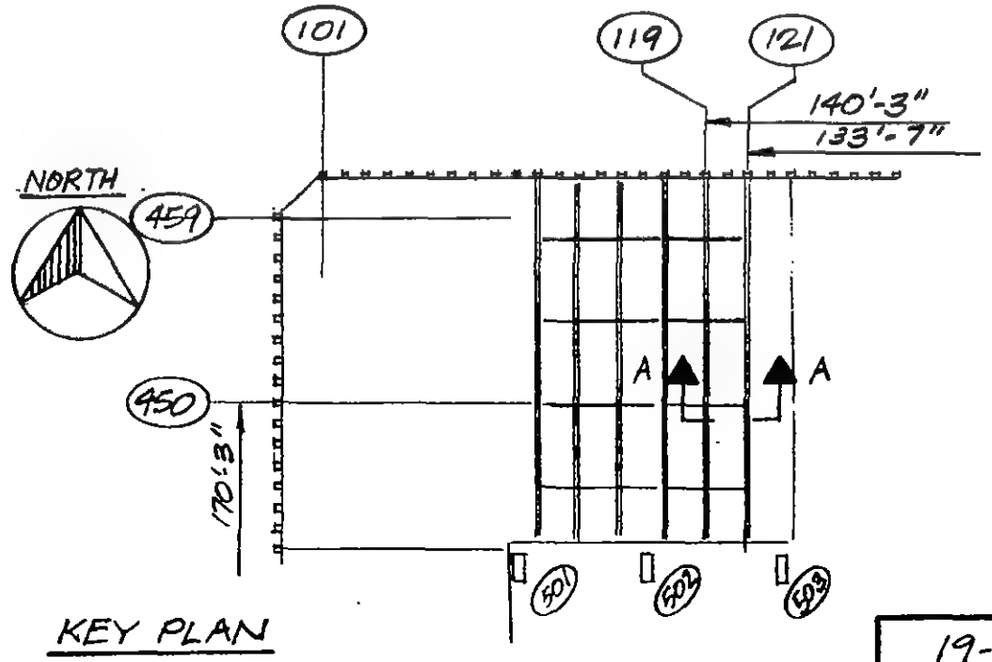

KEY PLAN

LICENSED PROFESSIONAL ENGINEER — LESLIE E. ROBERTSON — No. 34360 — UNIVERSITY OF THE STATE OF NEW YORK

DESIGNED WAB
DRAWN
REVIEWED

19-A-1141

SKILLING, HELLE, CHRISTIANSEN, ROBERTSON — Structural & Civil Engineers

PROJECT THE WORLD TRADE CENTER | TITLE: MODIFICATION TO TEMPORARY DERRICK SUPPORT EL 110 A | DATE 11-14-74

REVISIONS

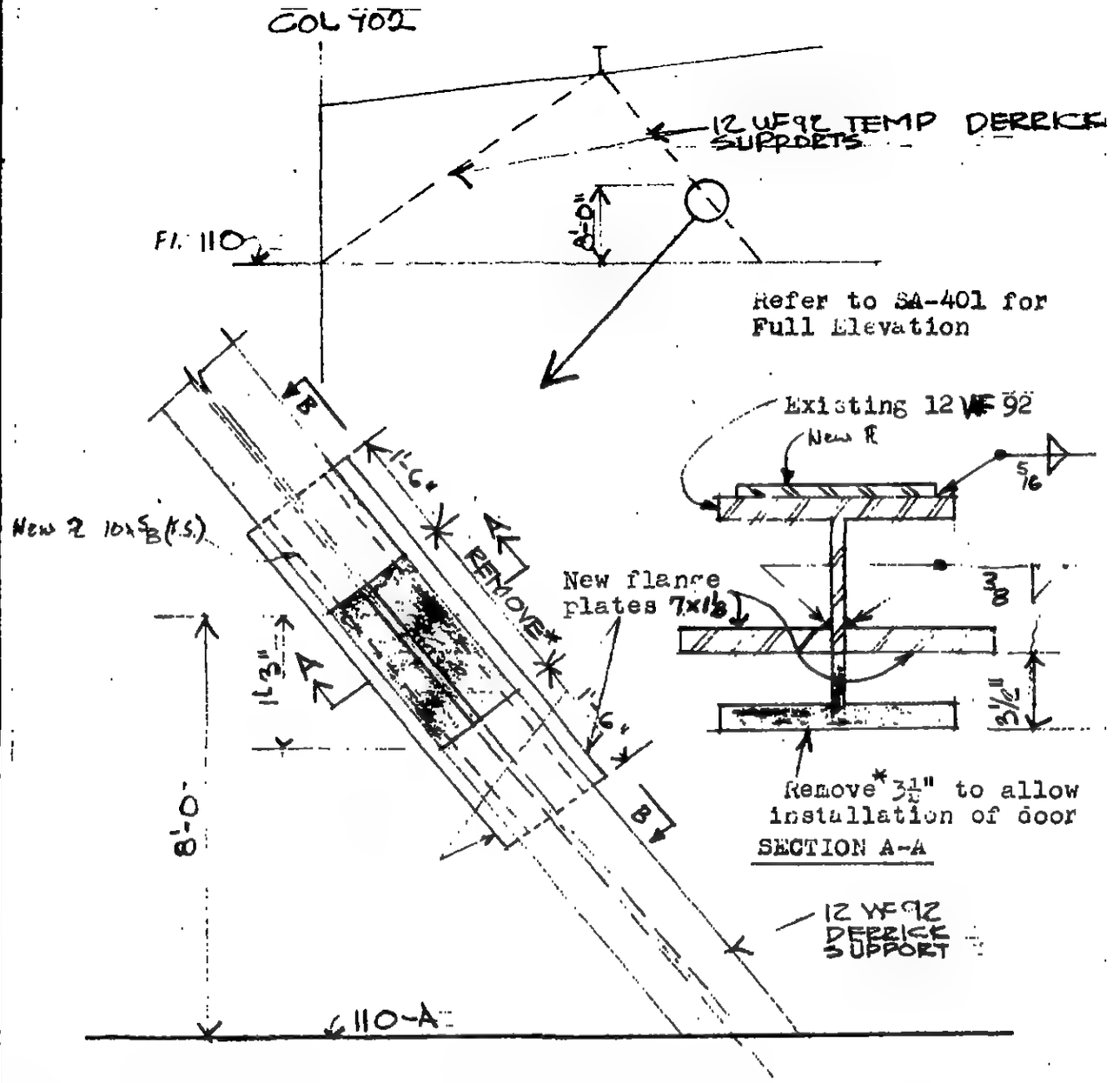

Elevation Vi... Looki... North

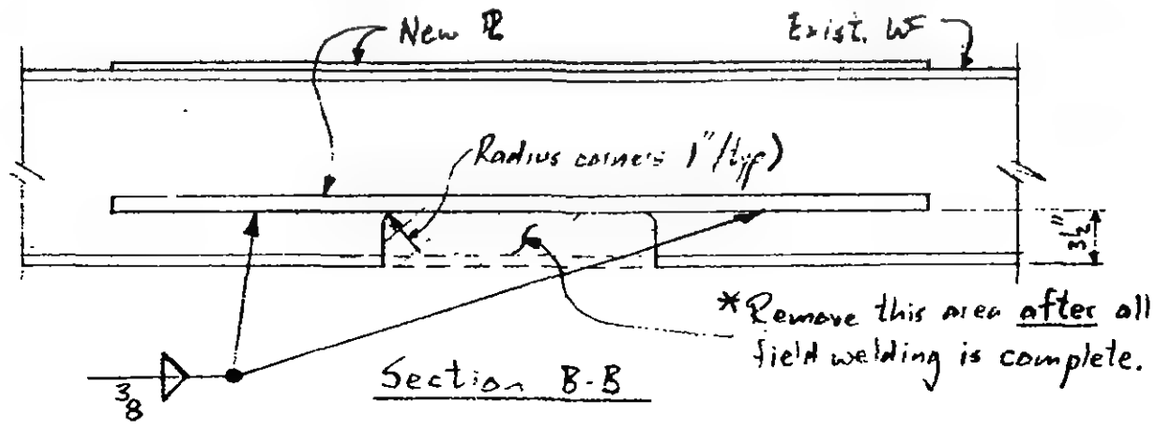

Section B-B

LICENSED PROFESSIONAL ENGINEER — LESLIE E. ROBERTSON — No. 34360 — UNIVERSITY OF THE STATE OF NEW YORK

DESIGNED

DRAWN

REVIEWED

19-A-1142

SKILLING, HELLE, CHRISTIANSEN, ROBERTSON — Structural & Civil Engineers

PROJECT THE WORLD TRADE CENTER | TITLE TOWER A, FLOOR 108, SLAB-OVER DETAILS | DATE 12-16-74

REVISIONS

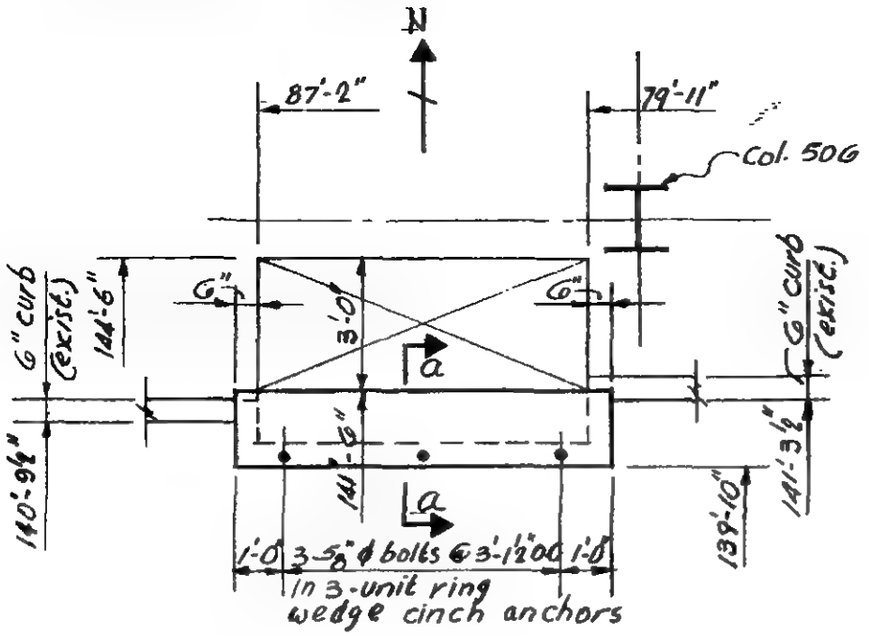

Part Plan - Tower A, Fl. 108

A

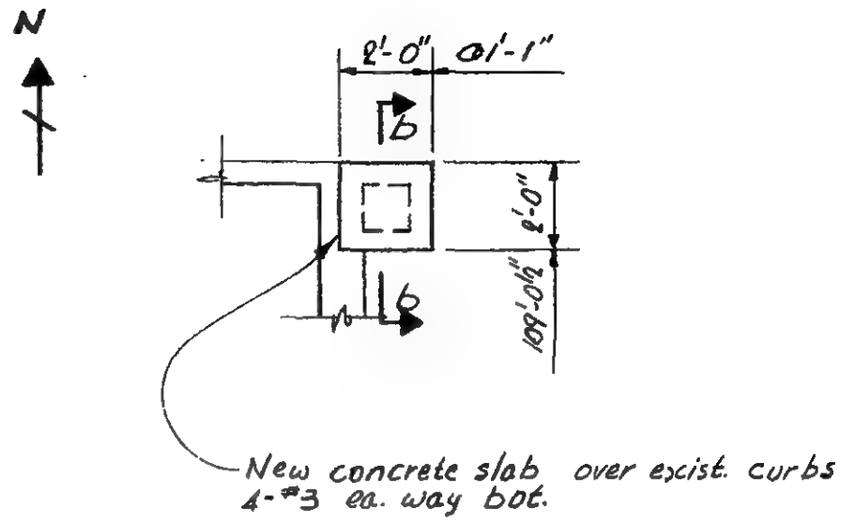

Part Plan - Tower A - Floor 108

B

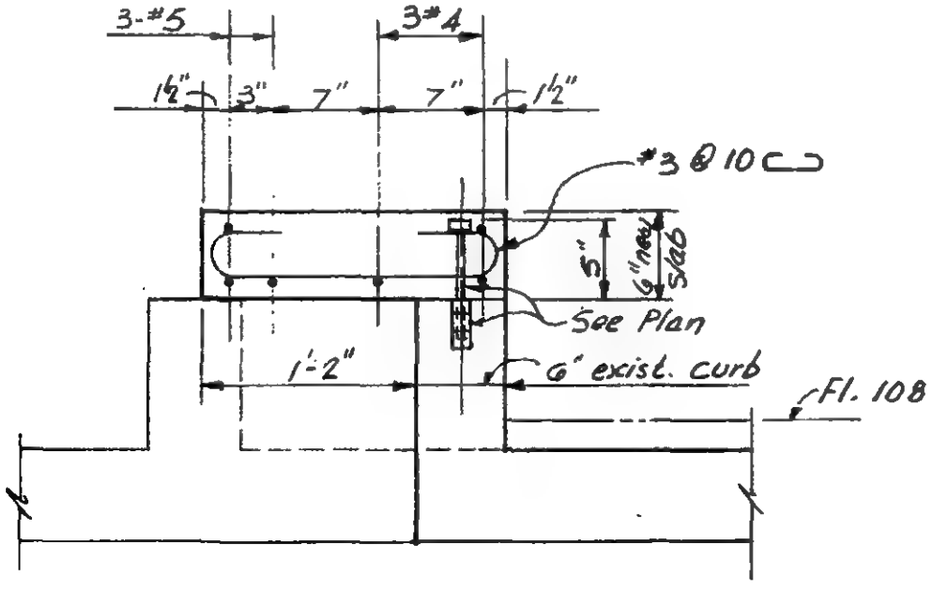

a

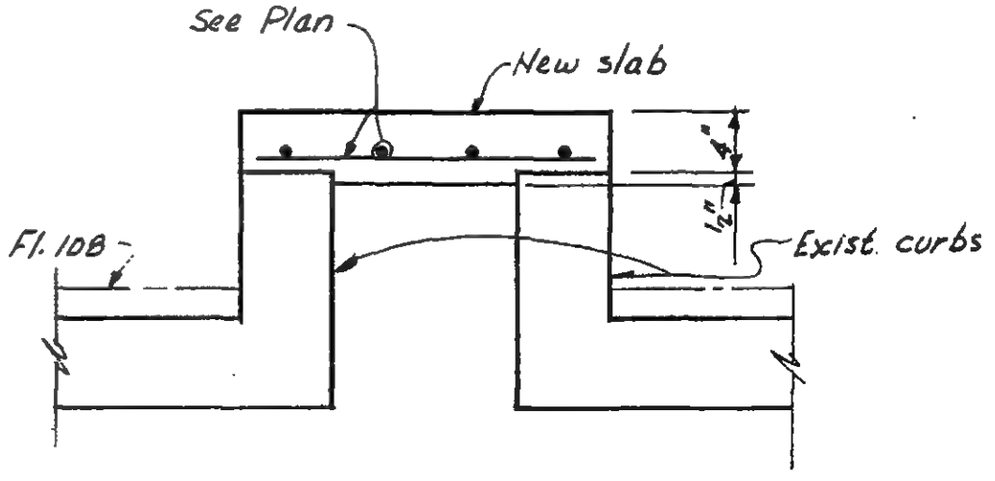

b

LICENSED PROFESSIONAL ENGINEER
LESLIE E. ROBERTSON
No. 34360
UNIVERSITY OF THE STATE OF NEW YORK

DESIGNED JTM
DRAWN D.W.T.
REVIEWED

19-A-1143.1

SKILLING, HELLE, CHRISTIANSEN, ROBERTSON — Structural & Civil Engineers

PROJECT THE WORLD TRADE CENTER | TITLE TOWER 4, FLOOR 108, SLAB-OVER DETAILS | DATE 12-16-74

REVISIONS

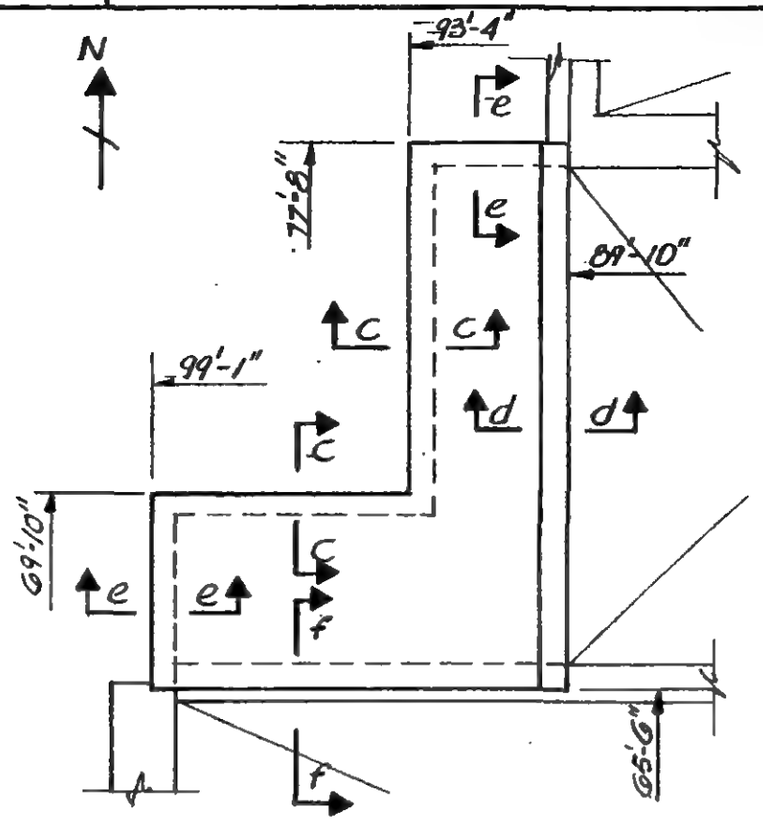

PART PLAN - TOWER A, Fl. 108

C

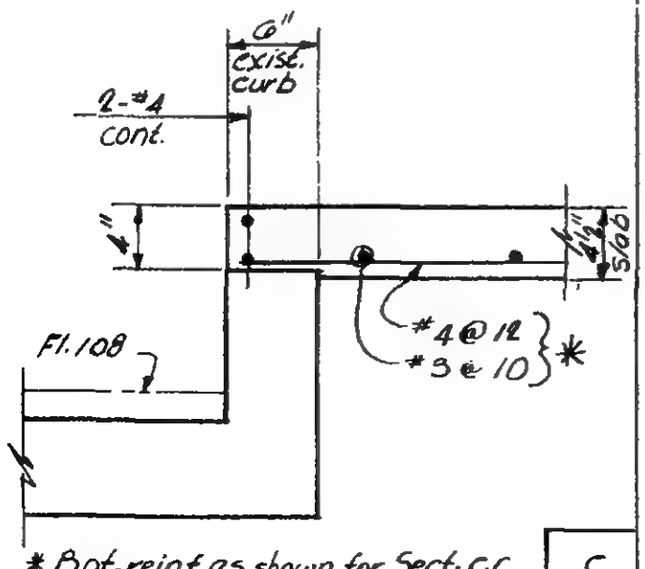

* Bot. reinf as shown for Sect. c-c rotate reinf. 90° horiz. for Sect. e-e.

c
e

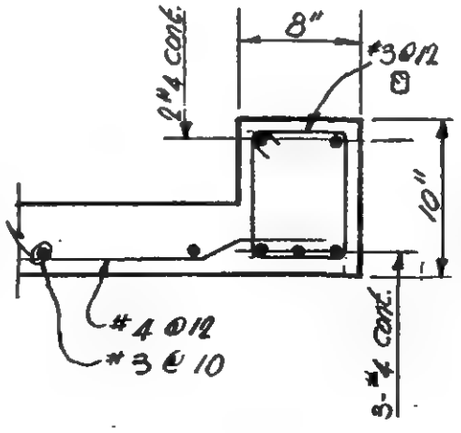

d

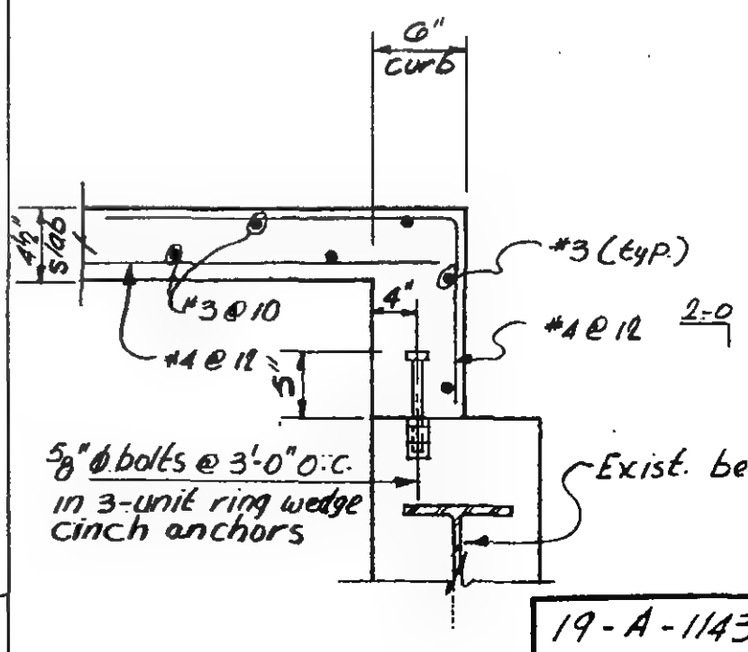

f

LICENSED PROFESSIONAL ENGINEER — LESLIE E. ROBERTSON — No. 34360 — UNIVERSITY OF THE STATE OF NEW YORK

DESIGNED JTM

DRAWN D.w.T.

REVIEWED

19-A-1143.2

SKILLING, HELLE, CHRISTIANSEN, ROBERTSON — Structural & Civil Engineers

PROJECT THE WORLD TRADE CENTER | TITLE TOWER A, FLOOR 107, OPENING FOR LAUNDRY CHUTE | DATE 12-16-74

REVISIONS

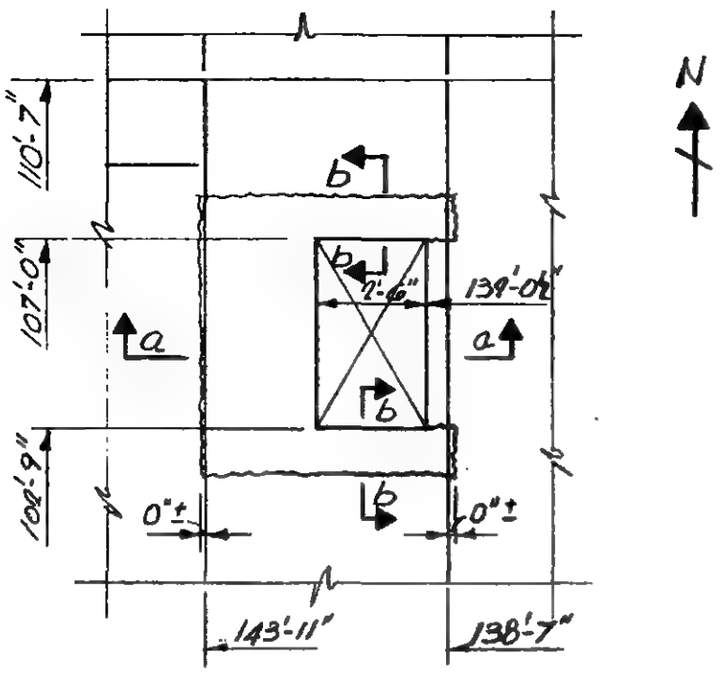

Part Plan - Tower-A, Floor 107

A

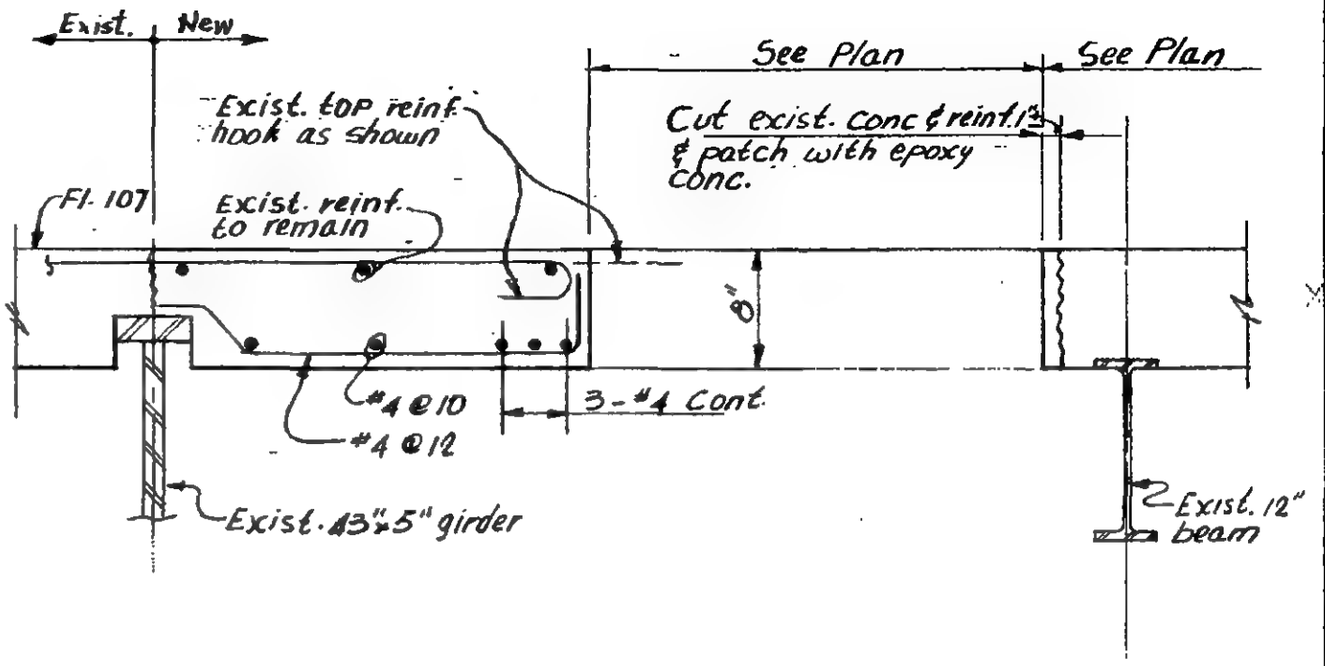

a

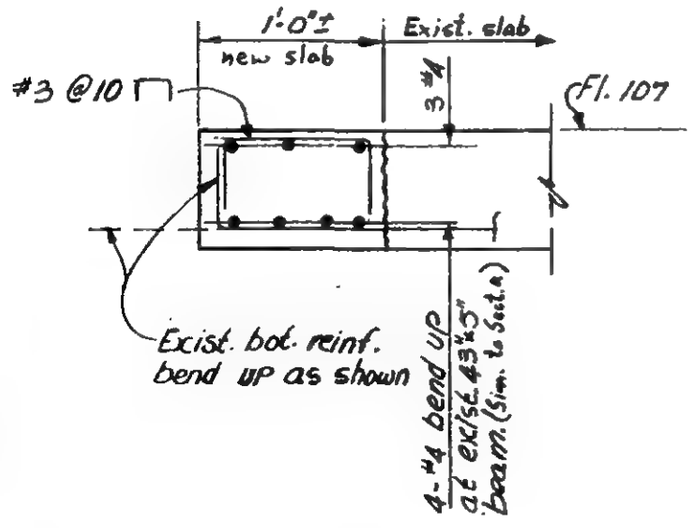

b

LICENSED PROFESSIONAL ENGINEER
LESLIE E. ROBERTSON
No. 34360
UNIVERSITY OF THE STATE OF NEW YORK

DESIGNED J.T.M.

DRAWN D.W.T.

REVIEWED

19-A-1144

SKILLING, HELLE, CHRISTIANSEN, ROBERTSON — Structural & Civil Engineers

PROJECT: THE WORLD TRADE CENTER | TITLE: TOWER A, FLOOR 108, OPENING FOR DUCT | DATE: 2-25-75

REVISIONS

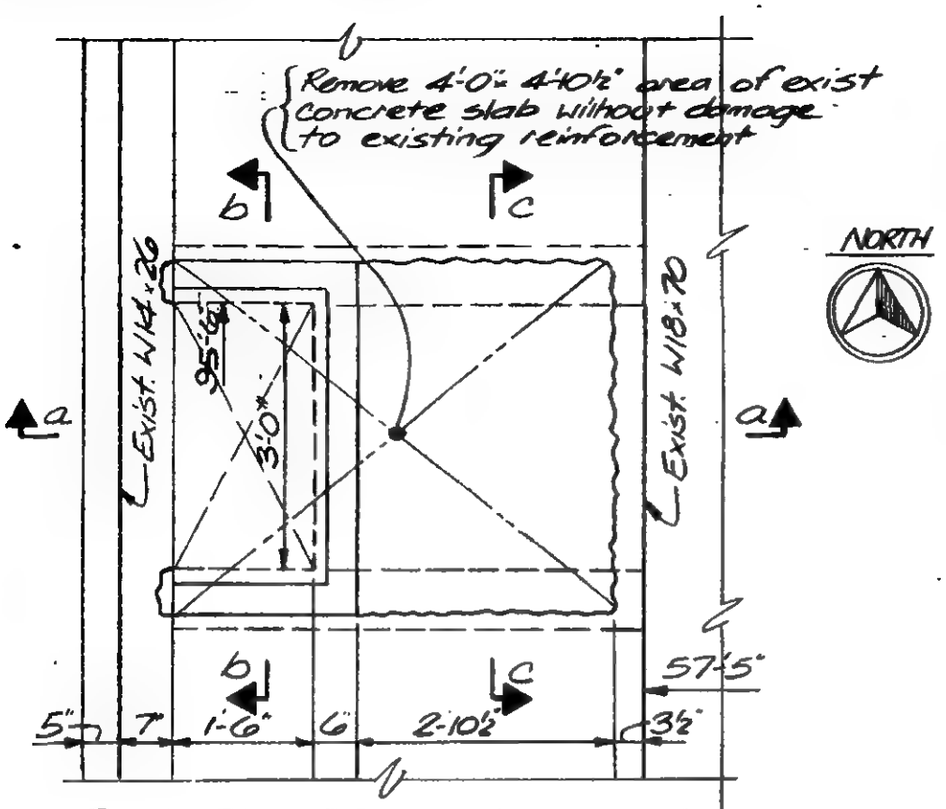

Part Plan, Tower A, Fl. 108 - Core Area near Col. 806

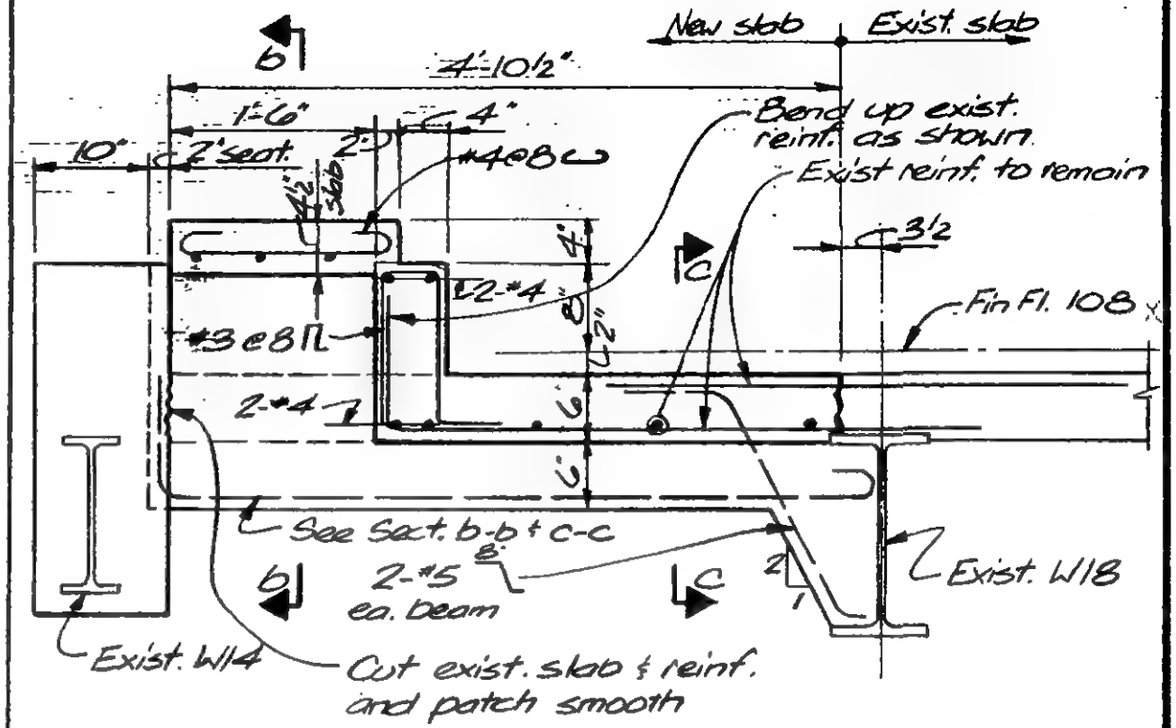

a

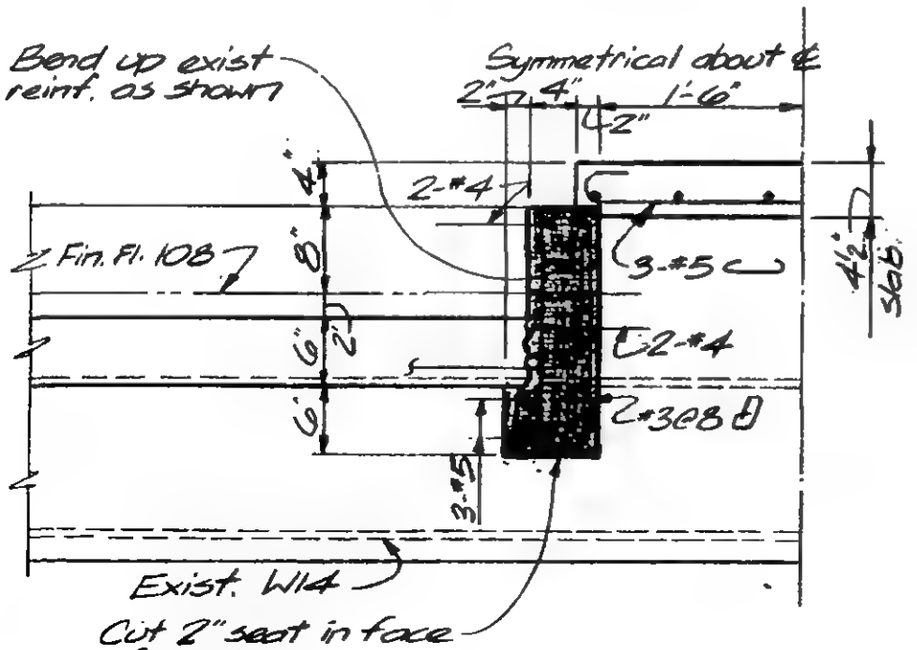

b

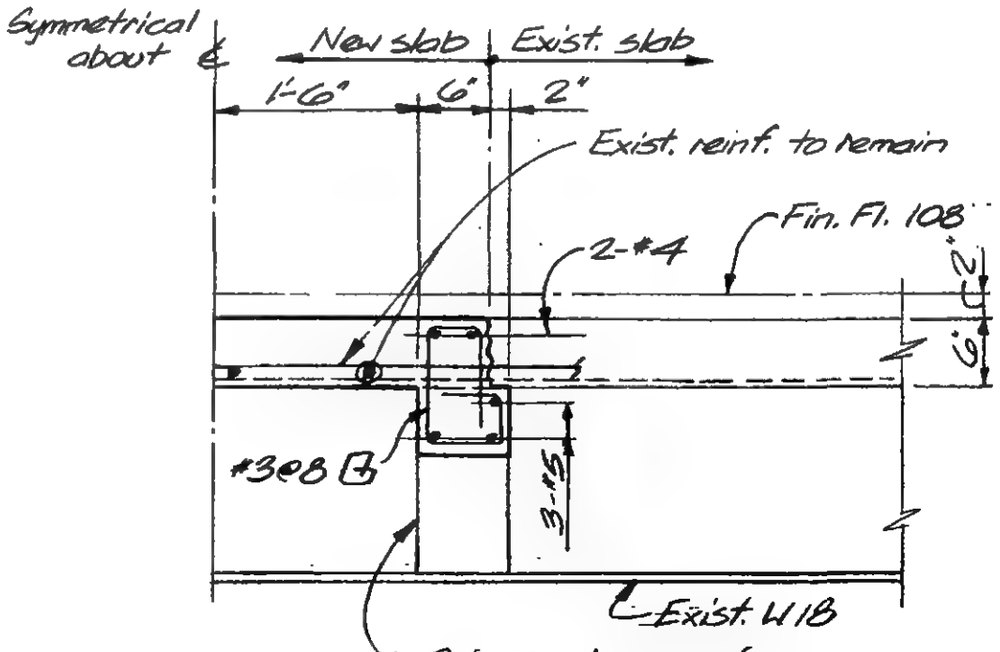

C

DESIGNED JTM
DRAWN JB
REVIEWED WAB

LICENSED PROFESSIONAL ENGINEER LESLIE E. ROBERTSON No 34360 UNIVERSITY OF THE STATE OF NEW YORK

19-A-1145

SKILLING, HELLE, CHRISTIANSEN, ROBERTSON — Structural & Civil Engineers

PROJECT: THE WORLD TRADE CENTER | TITLE: FEB. FIRE - REPAIR DETAIL-FLOOR 13-TOWER A | DATE: 2-20-75

REVISIONS

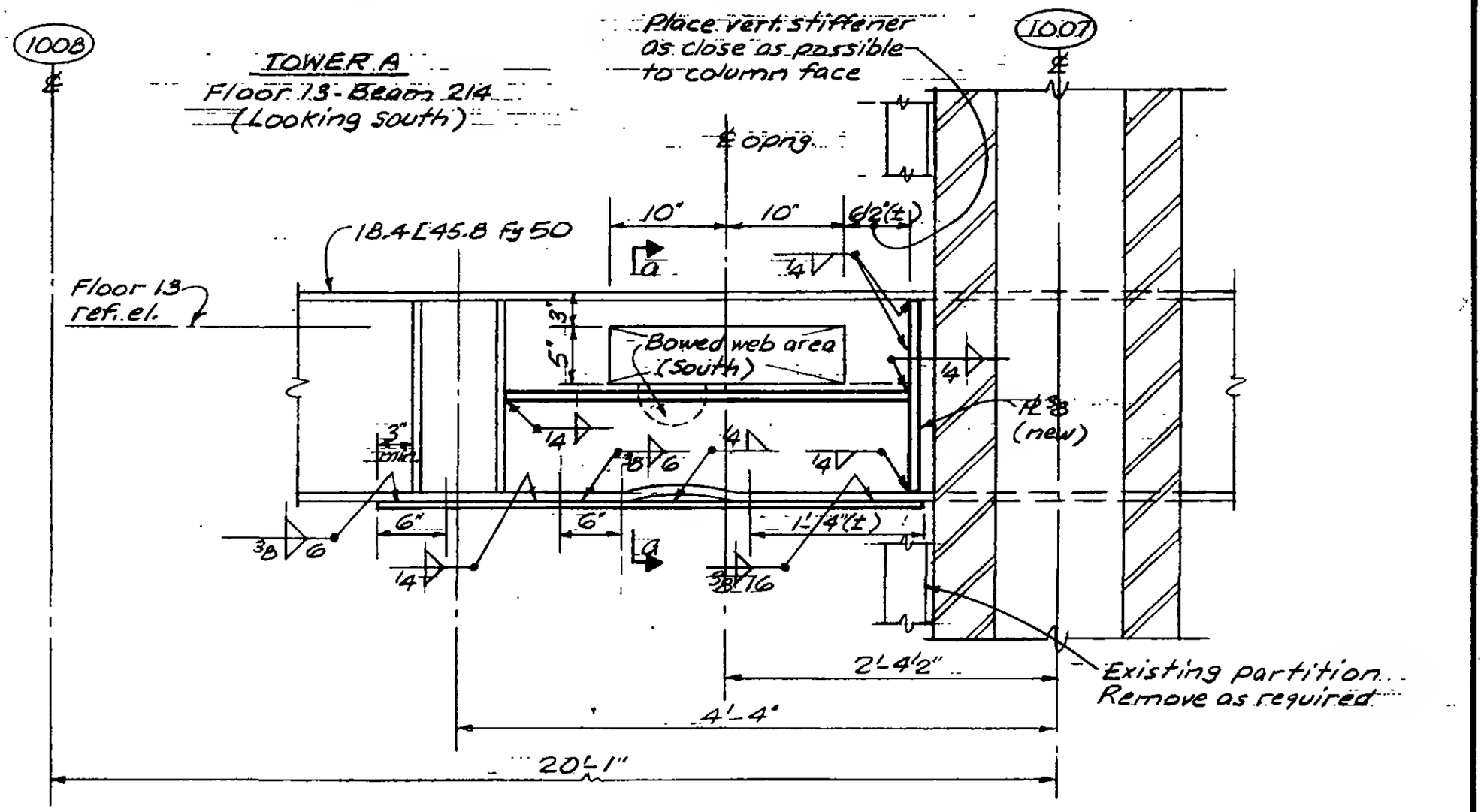

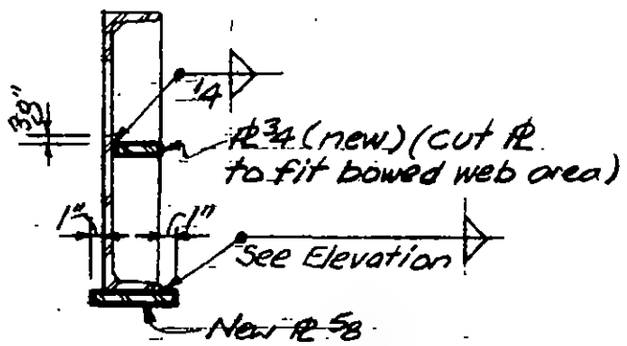

Section a-a

Procedure
1. Maintain existing shore
2. Weld vertical web PL 3/8
3. Weld horizontal web PL 3/4
4. Remove existing shore
5. Weld horizontal bottom PL 5/8

Note: All new PLs shown are Fy 50

LICENSED PROFESSIONAL ENGINEER — LESLIE E. ROBERTSON — No. 34360 — UNIVERSITY OF THE STATE OF NEW YORK

DESIGNED: CD
DRAWN: ALF
REVIEWED: WAB

19-A-1146

SKILLING, HELLE, CHRISTIANSEN, ROBERTSON — Structural & Civil Engineers

PROJECT: THE WORLD TRADE CENTER

TITLE: F.E.B. FIRE-FLOOR 12-TOWER A-REPAIR PLAN

DATE: 2-24-75

REVISIONS

3-20-75

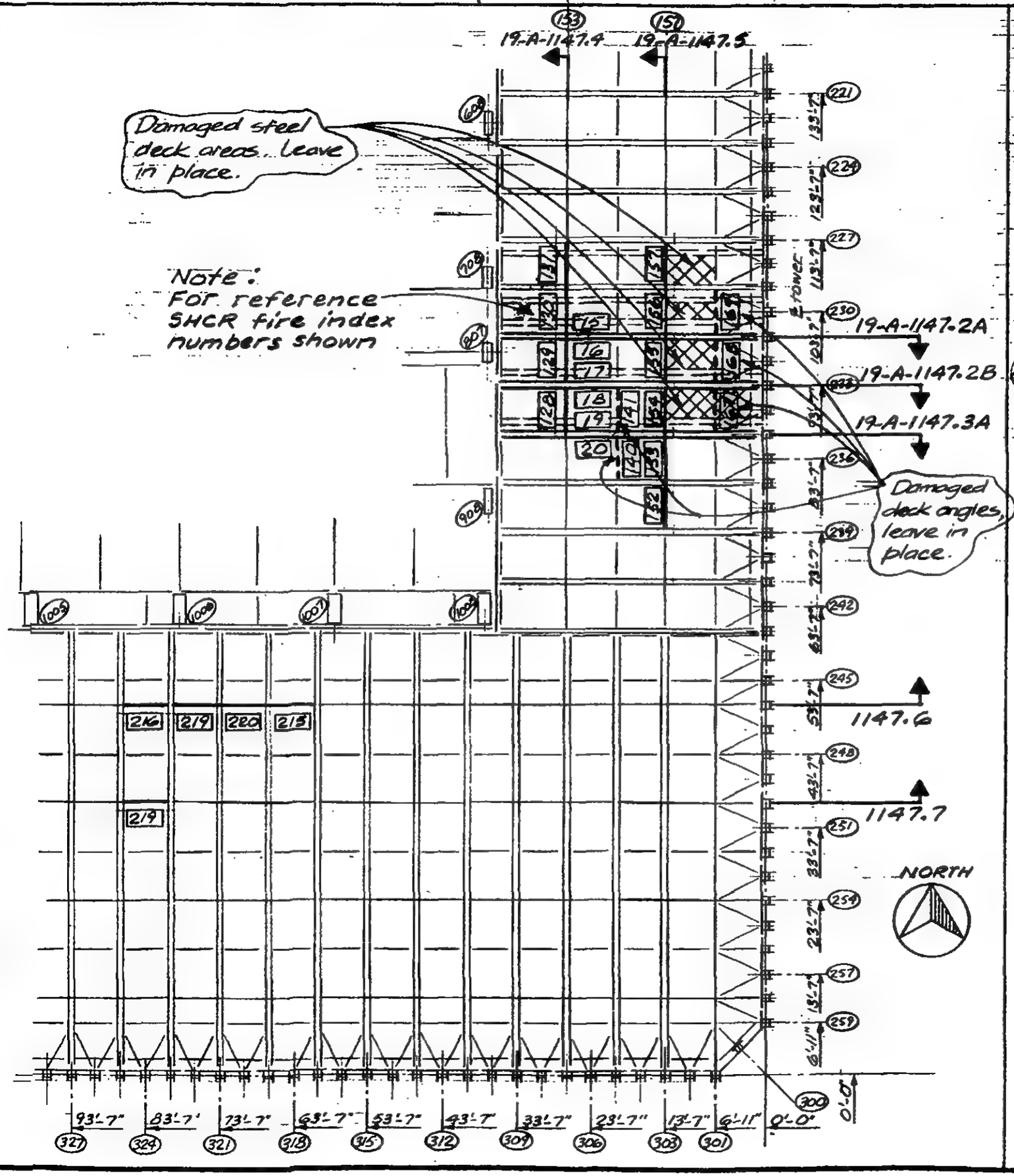

Notes:

1. All new material shall be ASTM-A36 except RS for top chord repairs shall be Fy 50.
2. All new weldings shall be accomplished use E 7018 low hydrogen electrodes.
3. Repair sequence shall be as follows:
   A. Shore area of repairs.
   B. Remove existing damping units where indicated.
   C. Make repairs.
4. Fireproof entire truss including top chord full length.

LICENSED PROFESSIONAL ENGINEER — LESLIE E. ROBERTSON — No. 34360 — UNIVERSITY OF THE STATE OF NEW YORK

DESIGNED

DRAWN ALF

REVIEWED Wolf

19-A-1147.1

SKILLING, HELLE, CHRISTIANSEN, ROBERTSON — Structural & Civil Engineers

PROJECT: THE WORLD TRADE CENTER | TITLE: FLOOR TRUSS C 32T-5 FEB. FIRE TRUSS REPAIR | DATE: 2-24-75

REVISIONS

3-20-75

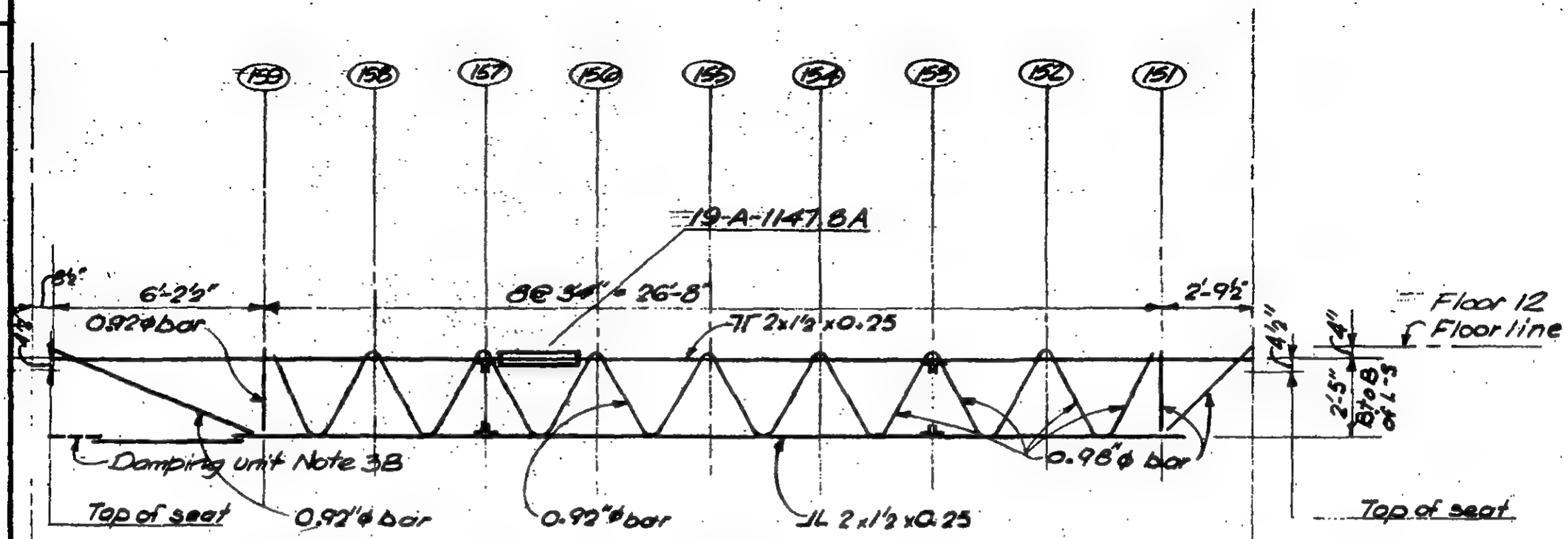

Reference line TWO TRUSSES ON COL. LINE 231 (Looking South)
exterior columns

A

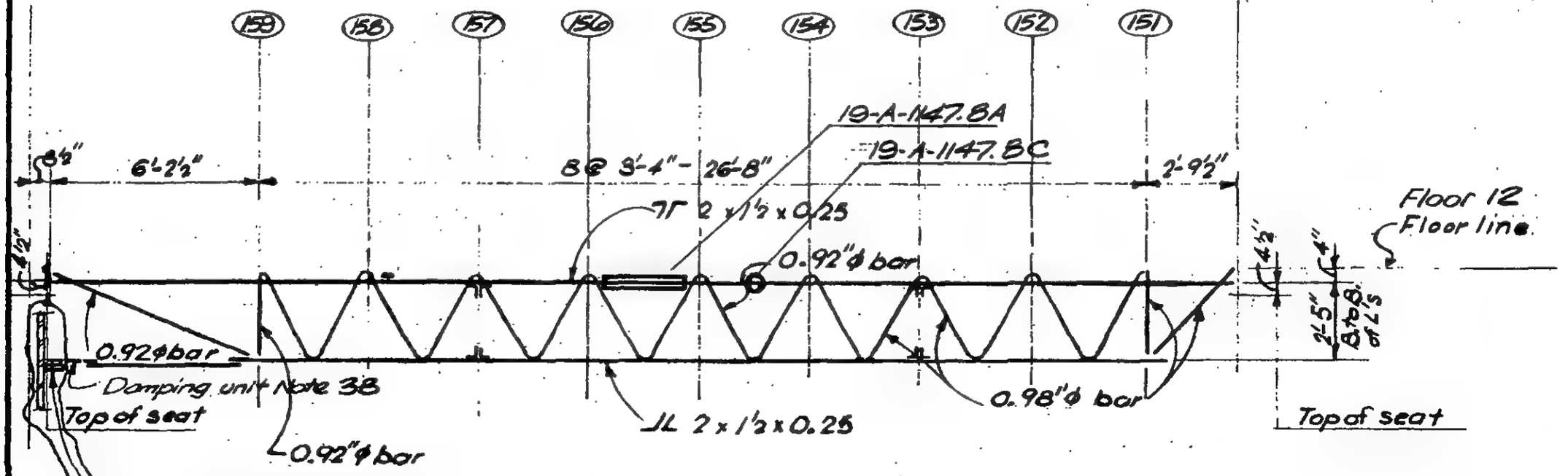

TWO TRUSSES ON COL. LINE 233 (Looking South)

Heat and straighten Damper connection ℄ at spandrel.
Temperature not to exceed 1250°F.

B

LICENSED PROFESSIONAL ENGINEER
LESLIE E. ROBERTSON
No. 34390
UNIVERSITY OF THE STATE OF NEW YORK

DESIGNED

DRAWN JB

REVIEWED LER

19-A-1147.2

SKILLING, HELLE, CHRISTIANSEN, ROBERTSON — Structural & Civil Engineers

PROJECT: THE WORLD TRADE CENTER | TITLE: FLOOR TRUSS C32I5 - FEB. FIRE TRUSS REPAIR | DATE: 2-24-75

REVISIONS

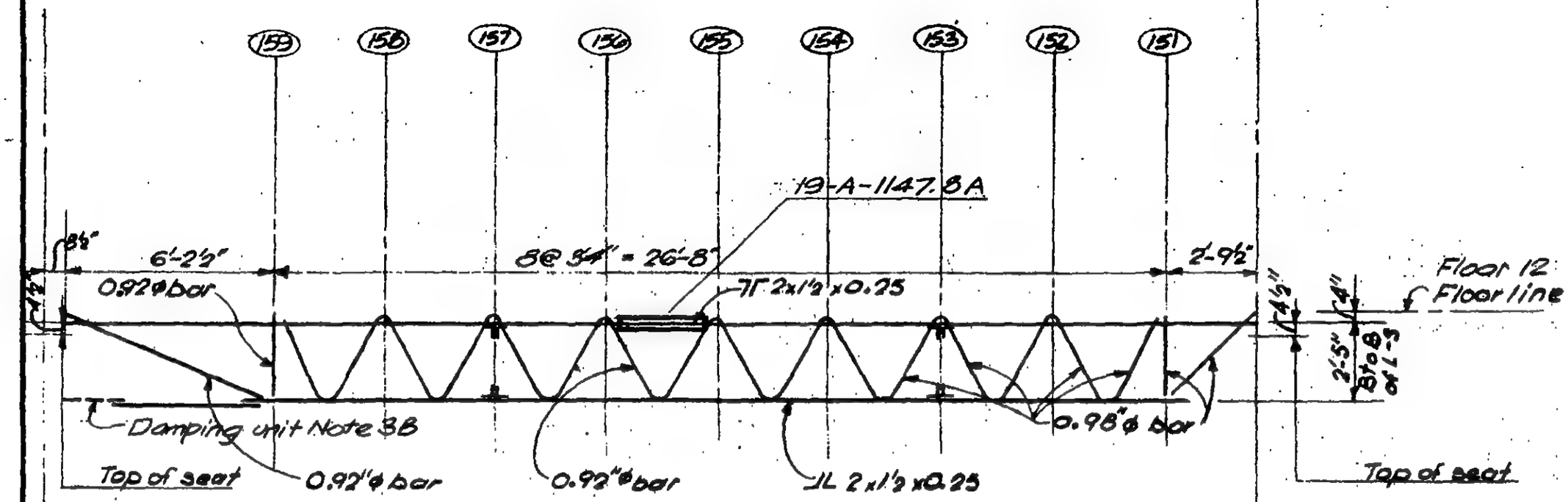

Reference line exterior columns

TWO TRUSSES ON COL. LINE 235 (Looking South)

A

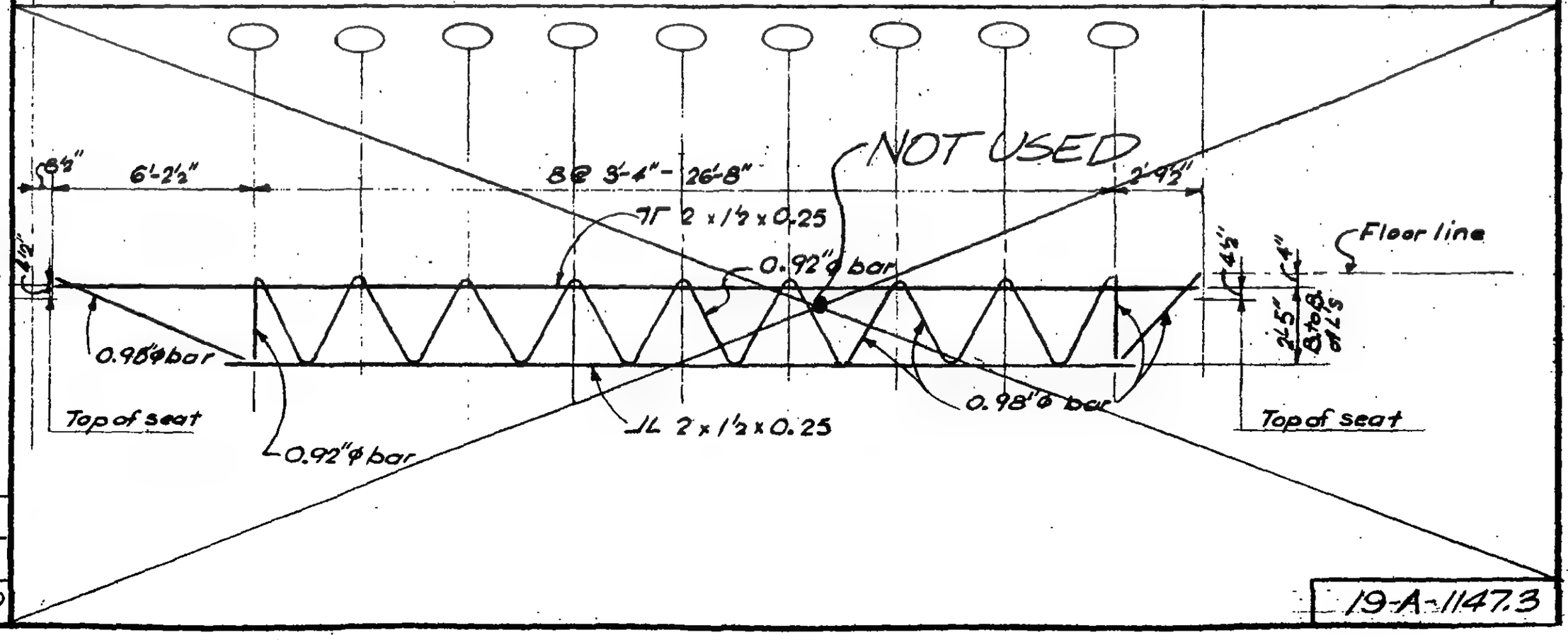

LICENSED PROFESSIONAL ENGINEER — LESLIE E. ROBERTSON — No 34360 — UNIVERSITY OF THE STATE OF NEW YORK

DESIGNED

DRAWN JB

REVIEWED WEB

19-A-1147.3

SKILLING, HELLE, CHRISTIANSEN, ROBERTSON — Structural & Civil Engineers

PROJECT: THE WORLD TRADE CENTER | TITLE: FLOOR TRUSS - FEB. FIRE BRIDGING REPAIR | DATE: 2-24-75

REVISIONS

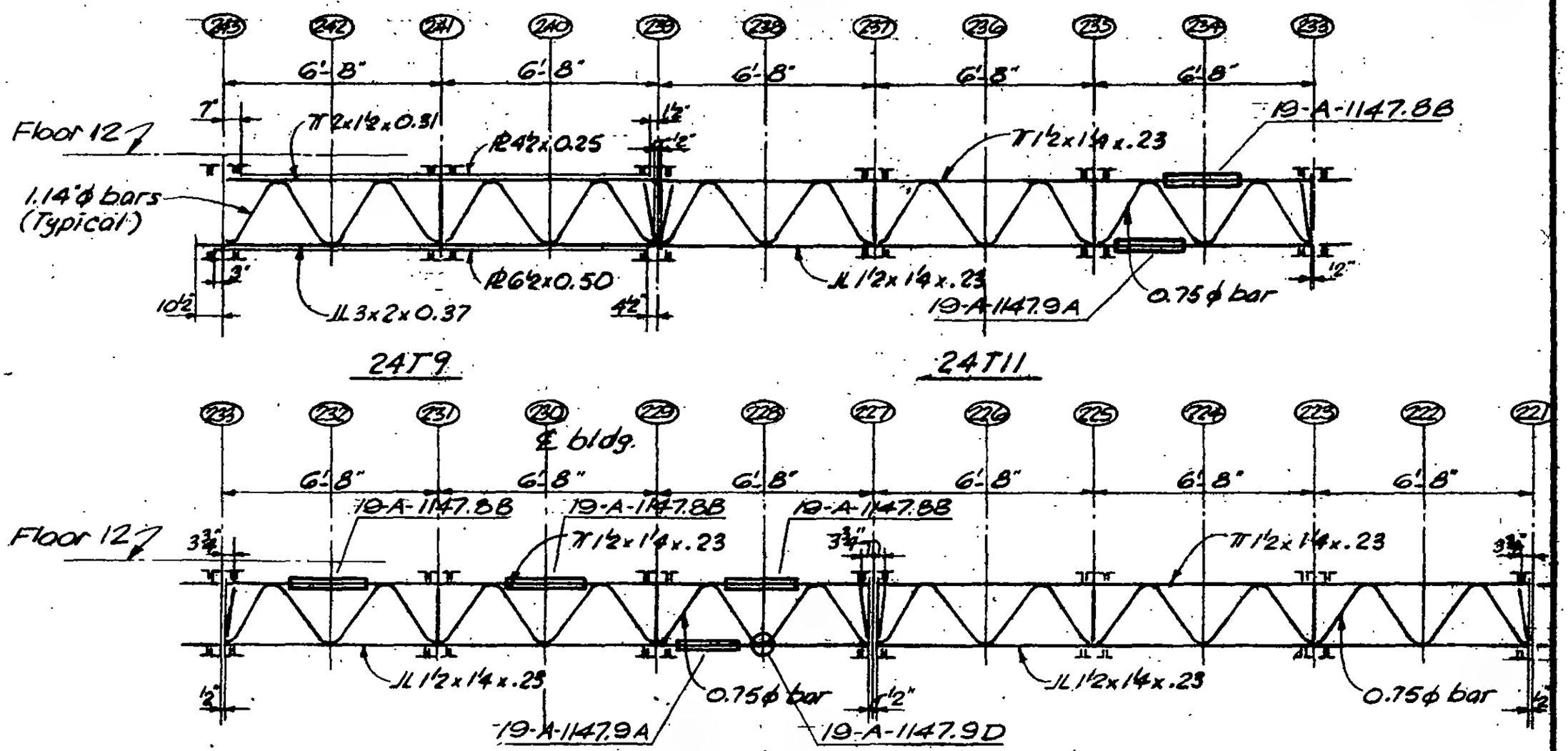

BRIDGING ON COL. LINE 153/307 (Looking West)

LICENSED PROFESSIONAL ENGINEER LESLIE E. ROBERTSON No. 34860 UNIVERSITY OF THE STATE OF NEW YORK

DESIGNED

DRAWN J. FRANGUI

REVIEWED

19-A-1147.4

SKILLING, HELLE, CHRISTIANSEN, ROBERTSON — Structural & Civil Engineers

PROJECT: THE WORLD TRADE CENTER | TITLE: FLOOR TRUSS - FEB. FIRE BRIDGING REPAIR | DATE: 2-24-75

REVISIONS

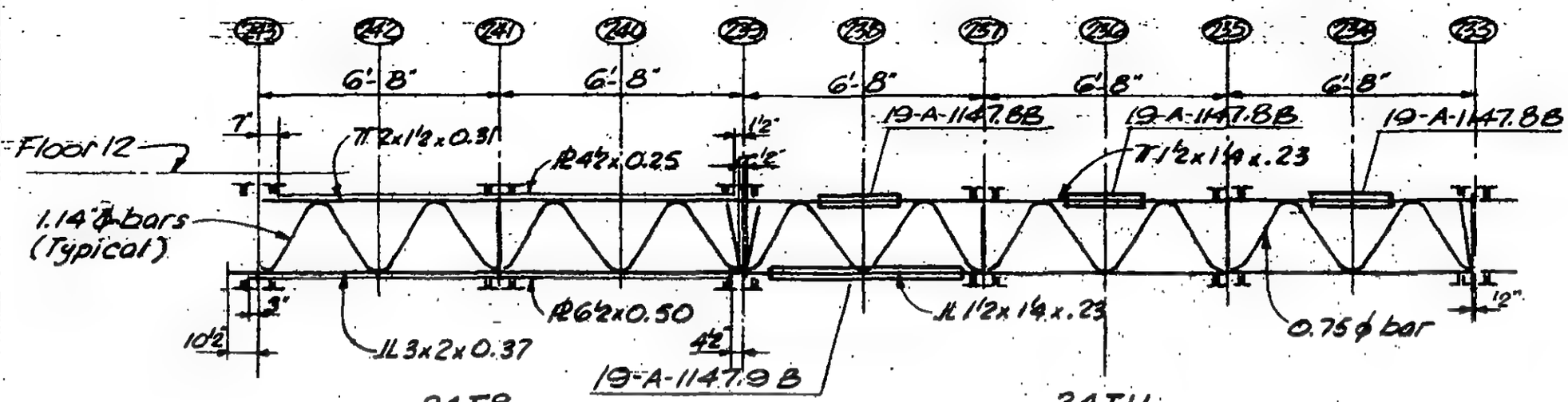

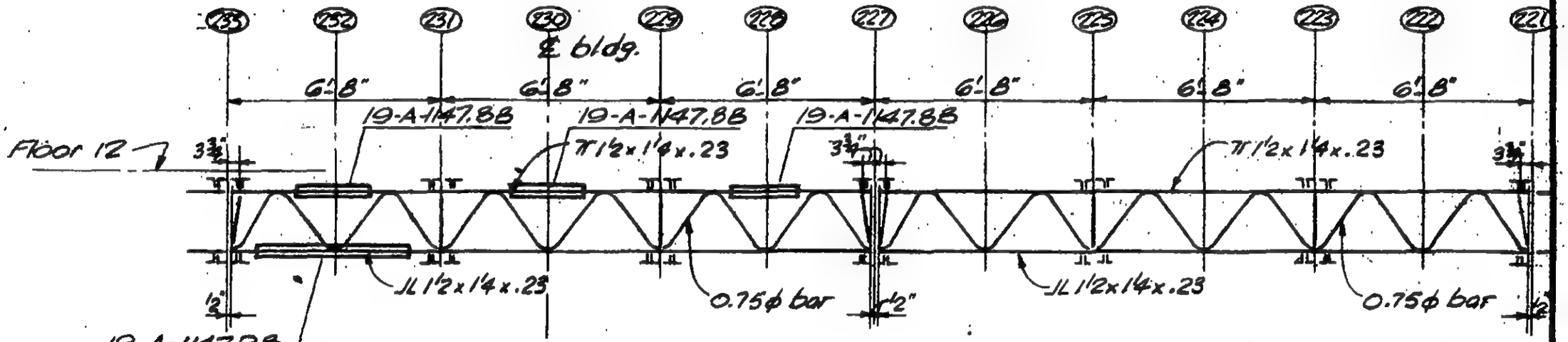

BRIDGING ON COL. LINE 157/303 (Looking West)

LICENSED PROFESSIONAL ENGINEER — LESLIE E. ROBERTSON — No 34960 — UNIVERSITY OF THE STATE OF NEW YORK

DESIGNED

DRAWN A. FRANQUI

REVIEWED

19-A-1147.5

SKILLING, HELLE, CHRISTIANSEN, ROBERTSON — Structural & Civil Engineers

PROJECT

TITLE FLOOR TRUSS - FEB. FIRE BRIDGING REPAIR

DATE 2-24-75

REVISIONS

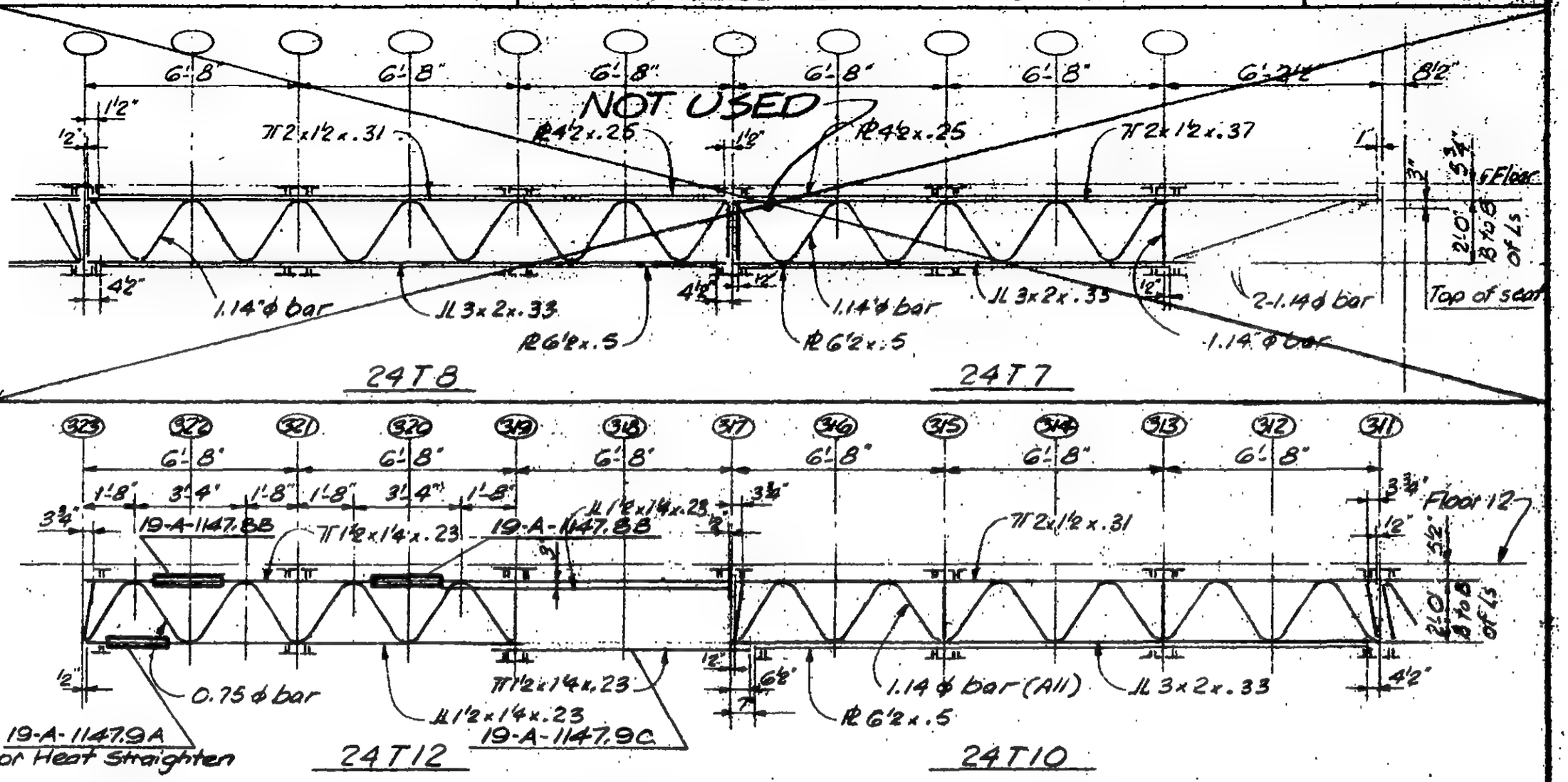

BRIDGING - COL. LINE 24C/41.4 (Looking North.)

LICENSED PROFESSIONAL ENGINEER — LESLIE E. ROBERTSON — No 34360 — UNIVERSITY OF THE STATE OF NEW YORK

DESIGNED

DRAWN A. FRANQUI

REVIEWED

19-A-1147.6

SKILLING, HELLE, CHRISTIANSEN, ROBERTSON — Structural & Civil Engineers

PROJECT

TITLE: FLOOR TRUSS - FEB. FIRE BRIDGING REPAIR

DATE: 2-24-75

REVISIONS

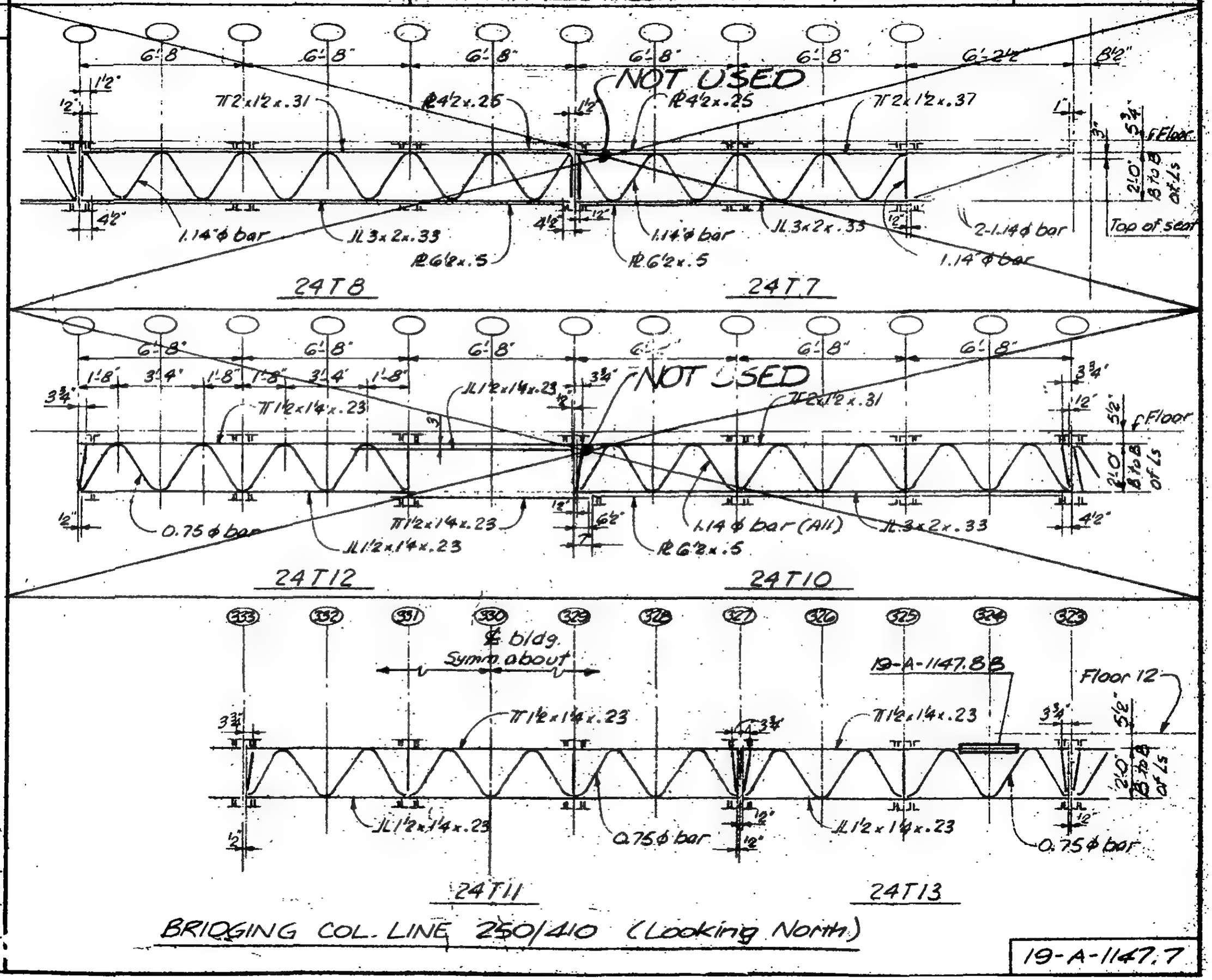

BRIDGING COL. LINE 250/410 (Looking North)

LICENSED PROFESSIONAL ENGINEER — LESLIE E. ROBERTSON — No 34360 — UNIVERSITY OF THE STATE OF NEW YORK

DESIGNED

DRAWN: A. FRANQUI

REVIEWED: WLR

19-A-1147.7

SKILLING, HELLE, CHRISTIANSEN, ROBERTSON — Structural & Civil Engineers

PROJECT: THE WORLD TRADE CENTER | TITLE: FEB. FIRE - FLOOR 12 - TOWER A - REPAIR DETAILS | DATE: 2-24-75

REVISIONS

3-20-75

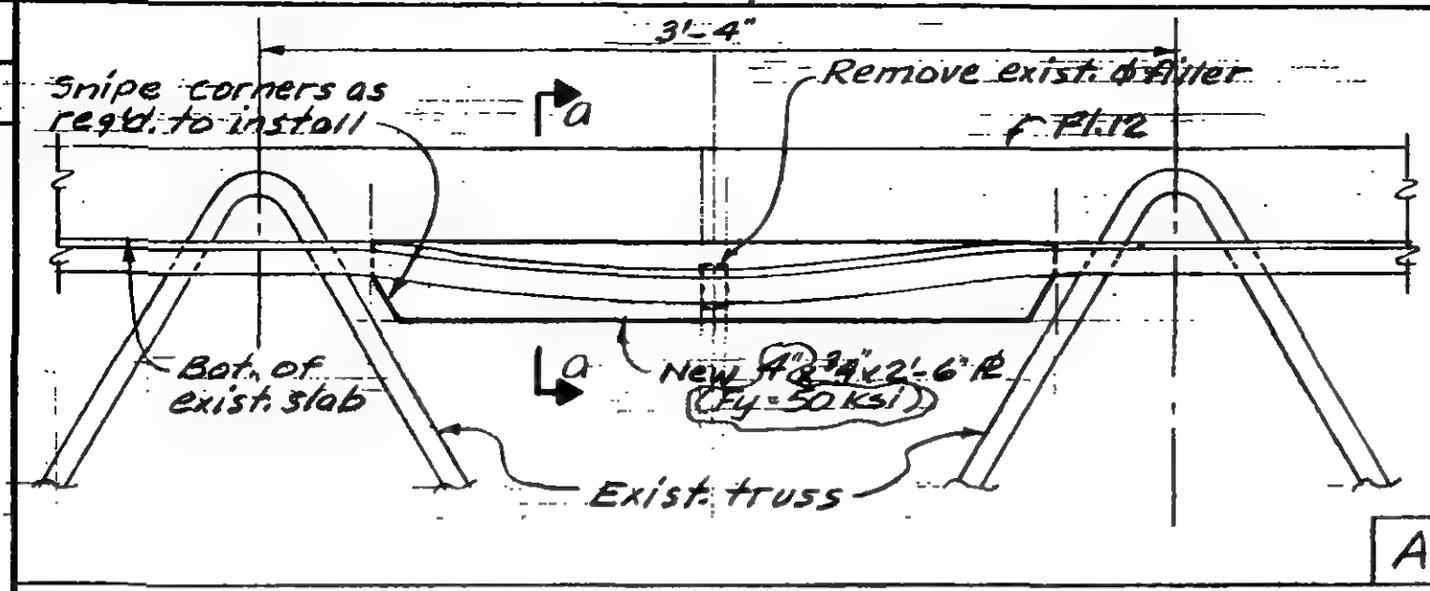

A

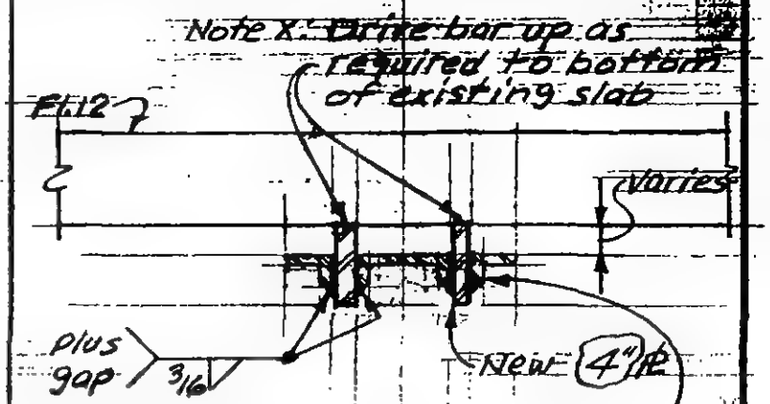

a

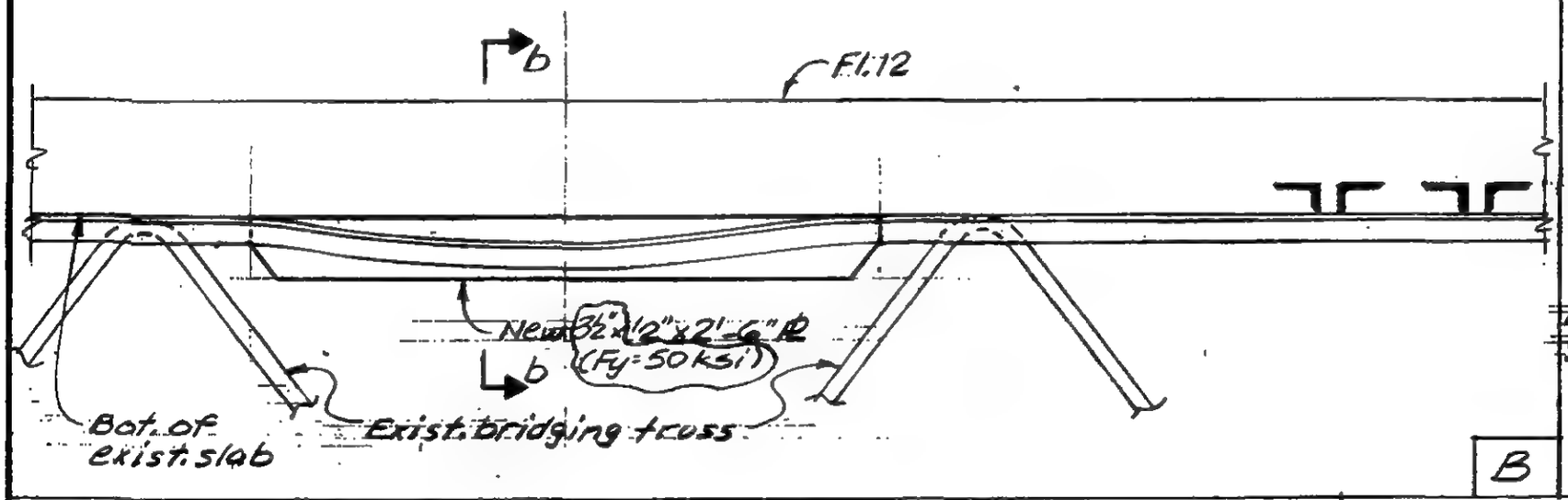

B

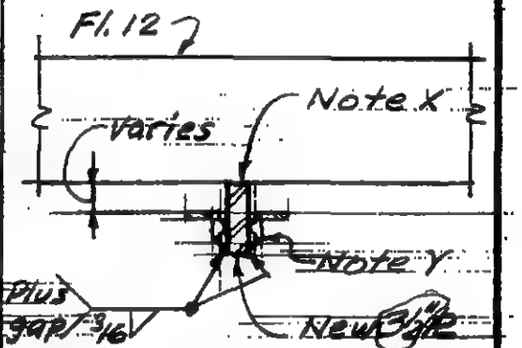

b

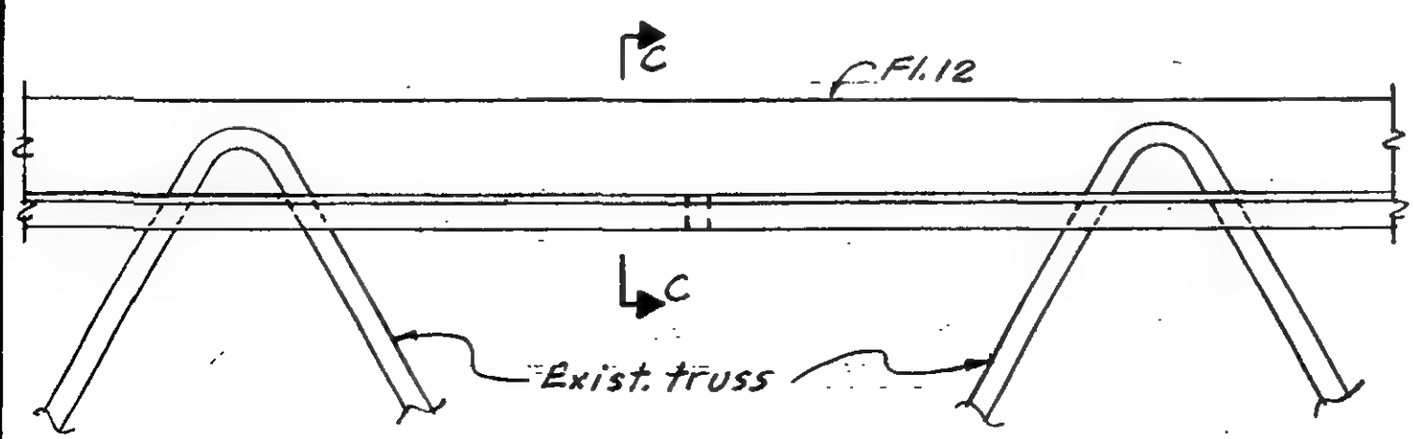

C

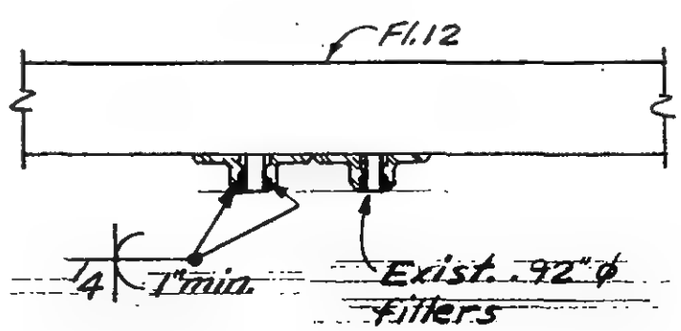

C

LICENSED PROFESSIONAL ENGINEER — LESLIE E. ROBERTSON — No. 34860 — UNIVERSITY OF THE STATE OF NEW YORK

DESIGNED

DRAWN ALF

REVIEWED WAP

19-A-1147.8

SKILLING, HELLE, CHRISTIANSEN, ROBERTSON — Structural & Civil Engineers

PROJECT: THE WORLD TRADE CENTER | TITLE: FEB. FIRE - FLOOR 12 - TOWER A - REPAIR DETAILS | DATE: 2-24-75

REVISIONS

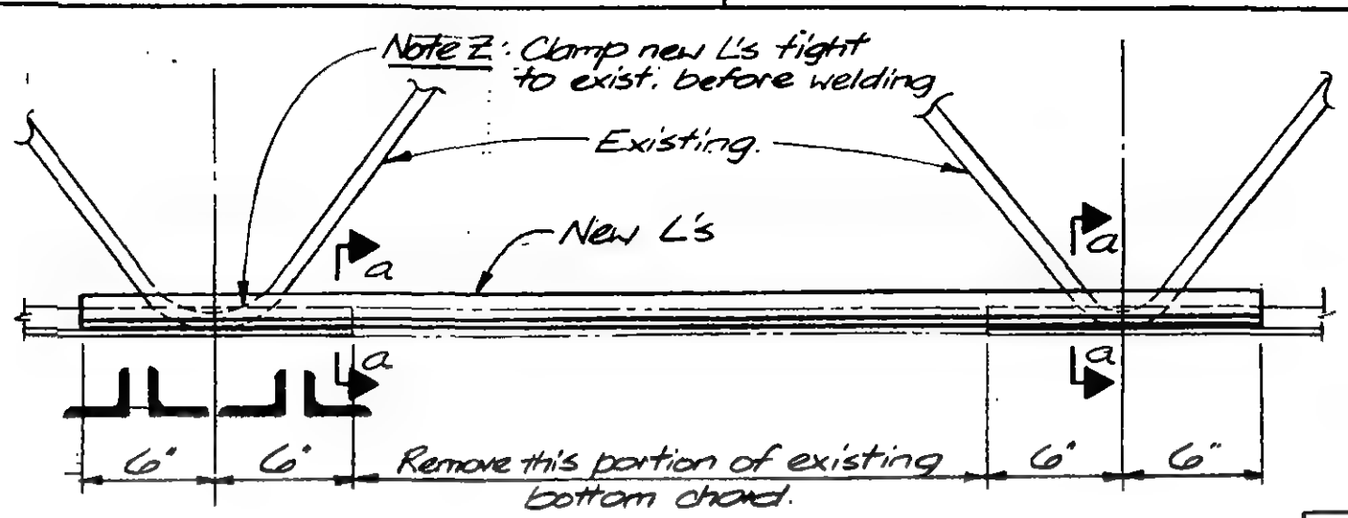

A

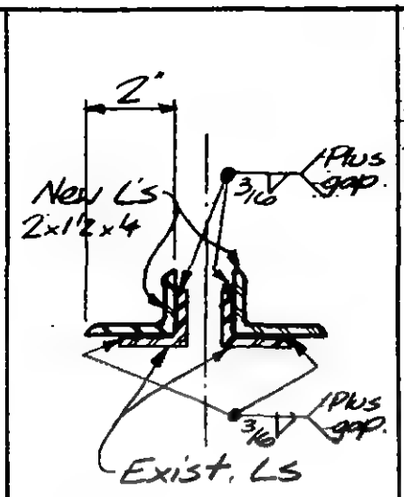

a

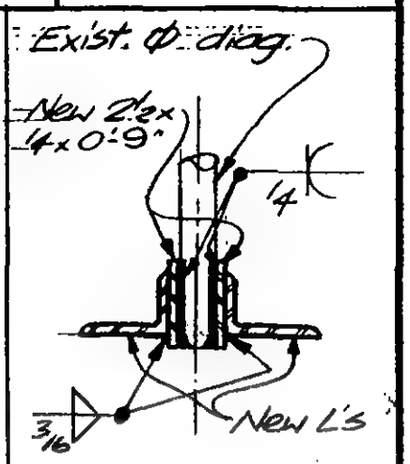

b

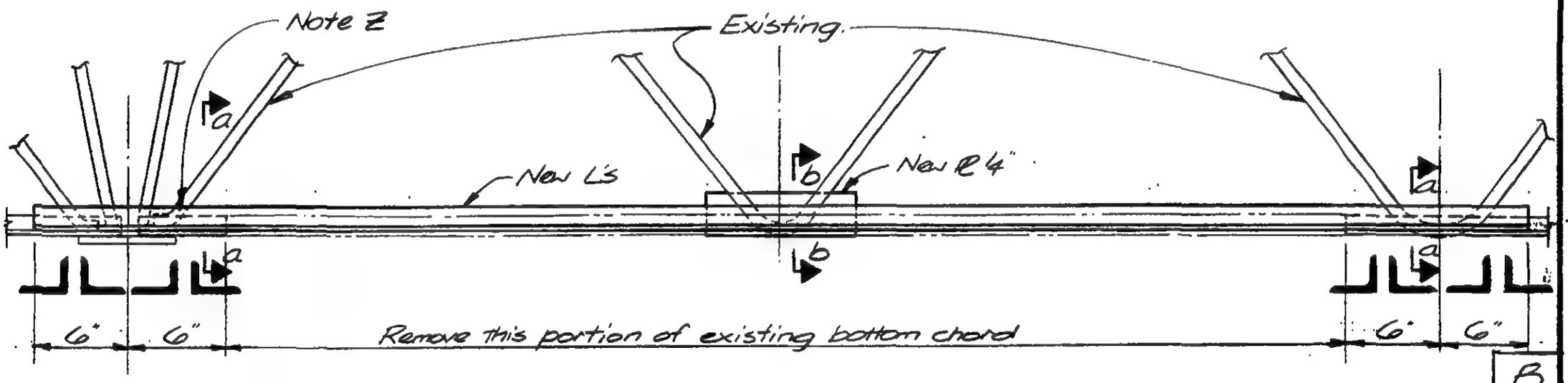

B

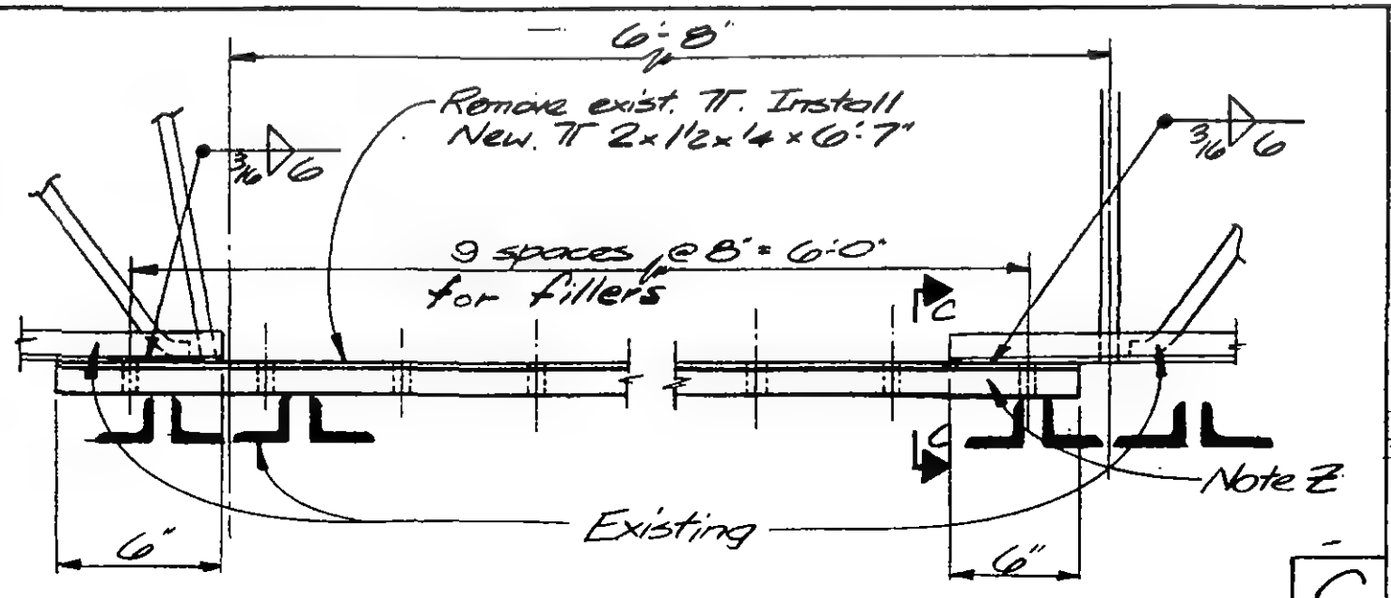

C

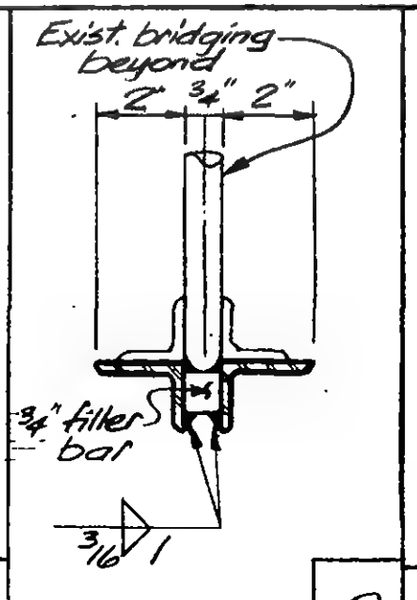

C

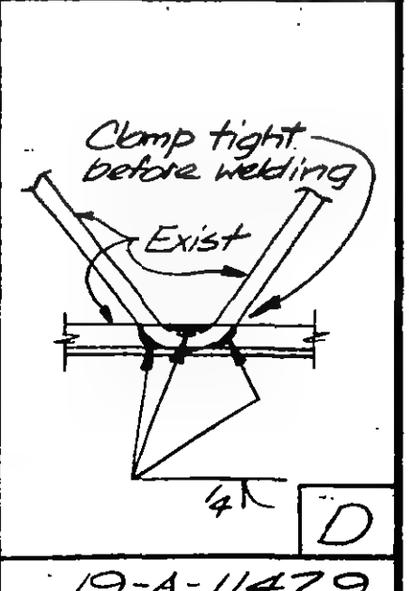

D

LICENSED PROFESSIONAL ENGINEER — LESLIE E. ROBERTSON — No 34360 — UNIVERSITY OF THE STATE OF NEW YORK

DESIGNED

DRAWN JB

REVIEWED

19-A-11479

SKILLING, HELLE, CHRISTIANSEN, ROBERTSON — Structural & Civil Engineers

PROJECT: THE WORLD TRADE CENTER | TITLE: TOWER A - FLOOR 107 - BRIDGING | DATE: 4-15-75

REVISIONS

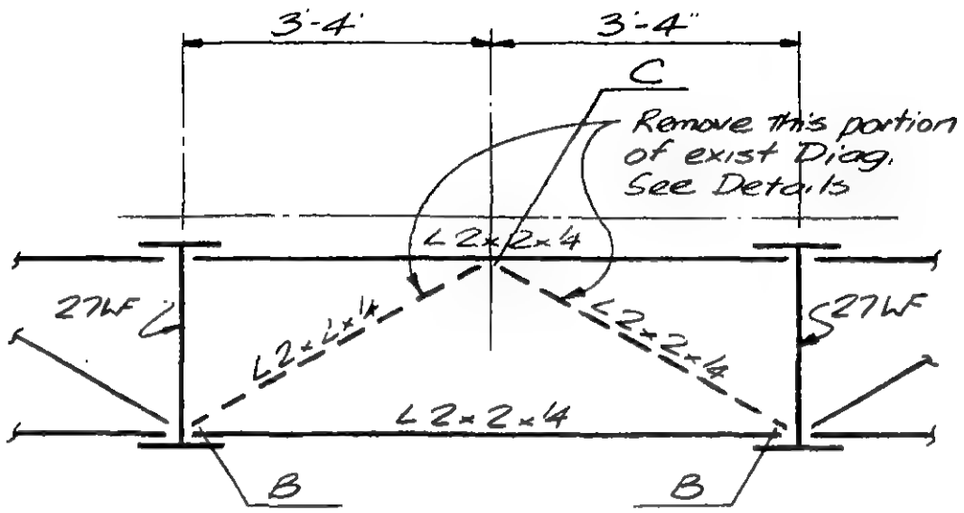

A

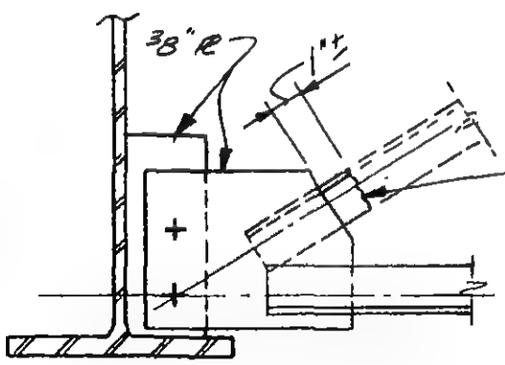

B

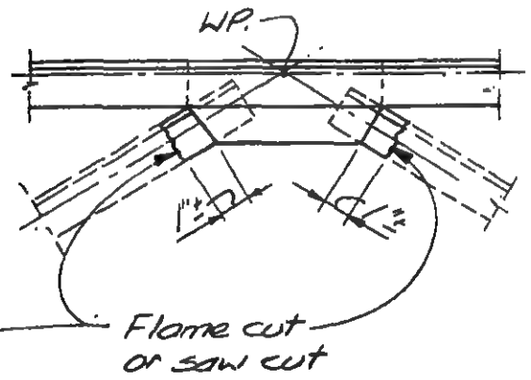

C

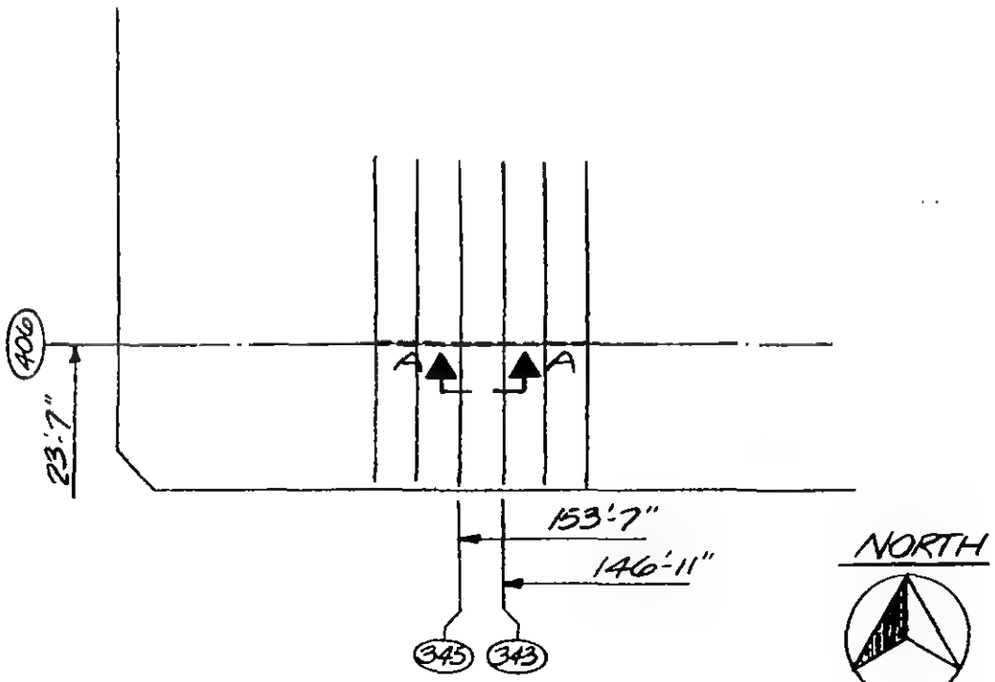

Part Plan - Fl. 107A

19-A-1148

LICENSED PROFESSIONAL ENGINEER
LESLIE E. ROBERTSON
No 34360
UNIVERSITY OF THE STATE OF NEW YORK

DESIGNED WAB
DRAWN JB
REVIEWED WAB

SKILLING, HELLE, CHRISTIANSEN, ROBERTSON — Structural & Civil Engineers

PROJECT THE WORLD TRADE CENTER | TITLE TOWER A - FLOOR 108 - BRACING | DATE 4-15-75

REVISIONS

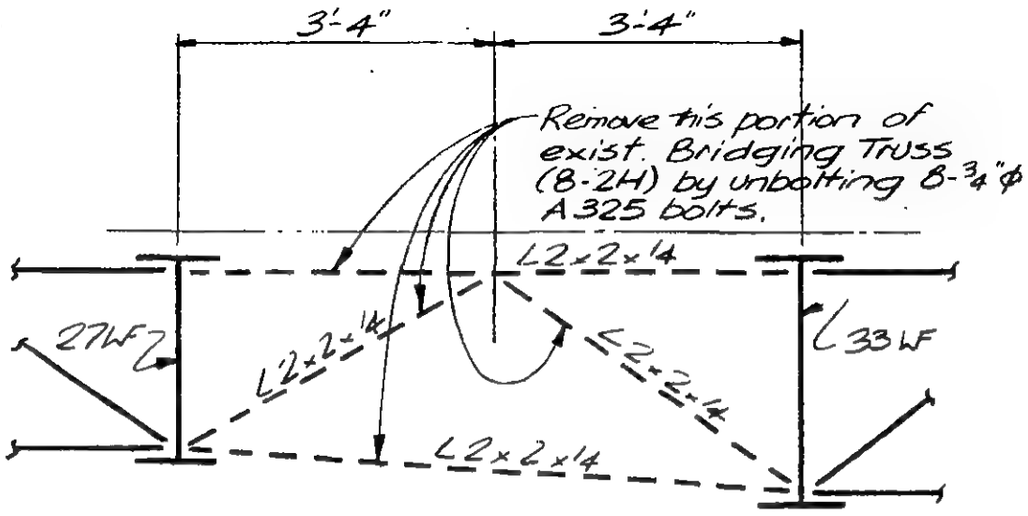

A

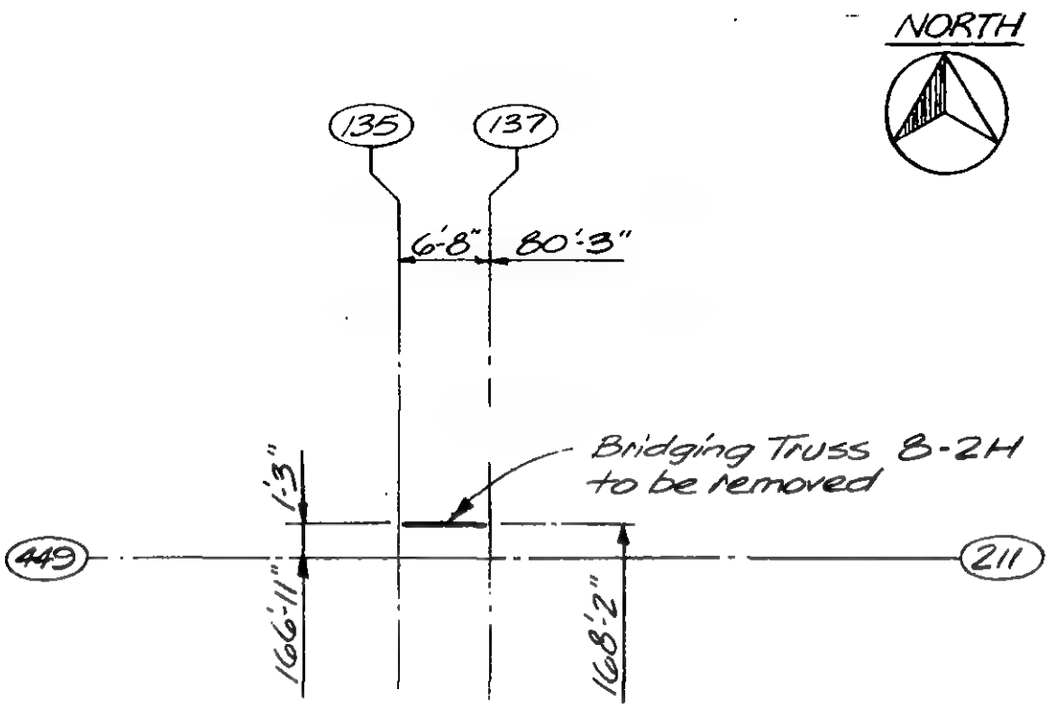

KEY PLAN (Floor 108A)

LICENSED PROFESSIONAL ENGINEER
LESLIE E. ROBERTSON
No. 34360
UNIVERSITY OF THE STATE OF NEW YORK

DESIGNED JTM

DRAWN JB

REVIEWED WAB

19-A-1149

SKILLING, HELLE, CHRISTIANSEN, ROBERTSON — Structural & Civil Engineers

PROJECT: THE WORLD TRADE CENTER | TITLE: TOWER A-FLOORS 91 & 92 - STAIR SUPPORTS | DATE: 5-23-75

REVISIONS

Add. △1 8-8-75

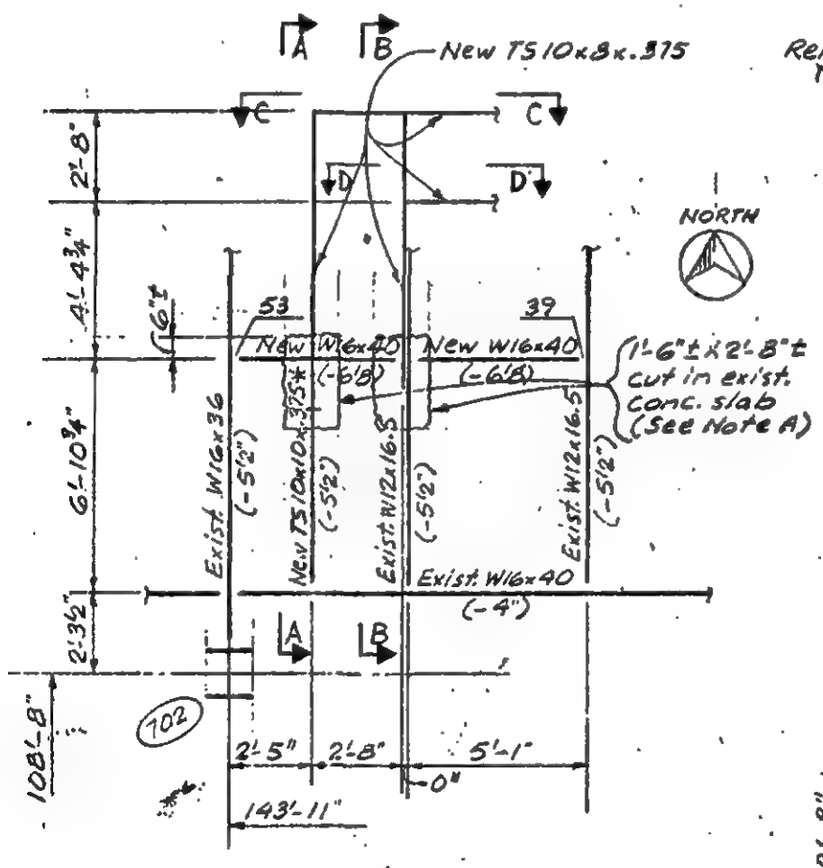

Part Plan @ Floor 91

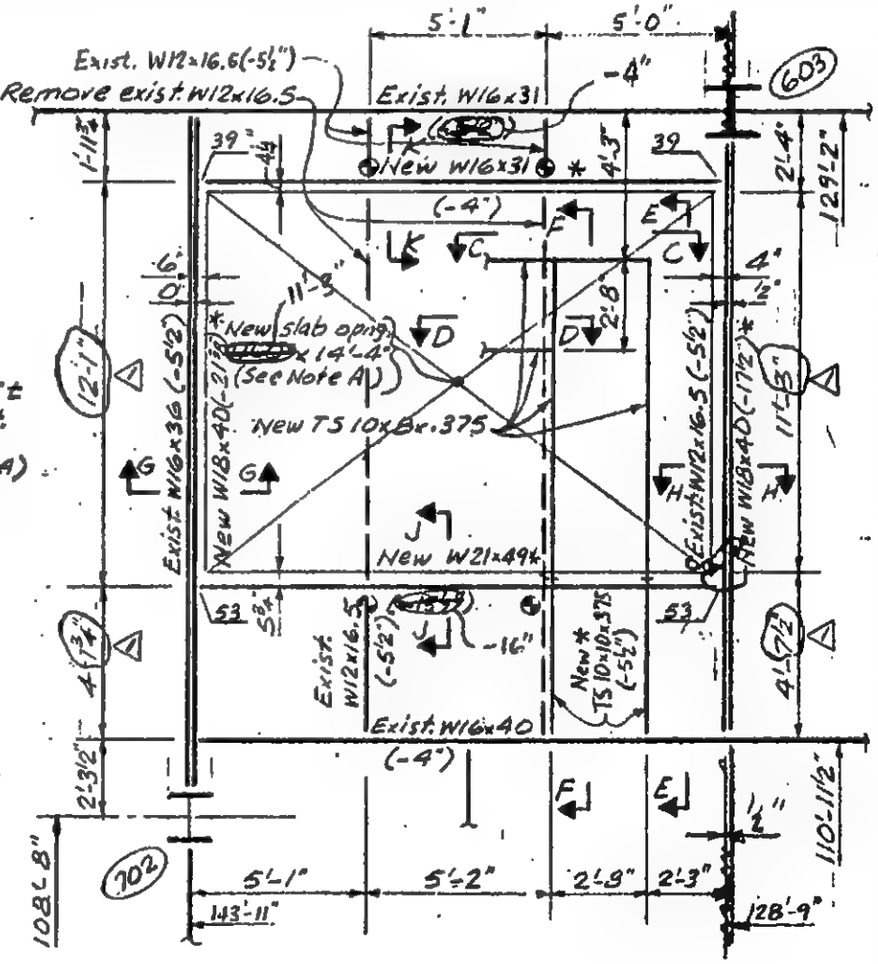

Part Plan @ Floor 92

General Notes:

1. All new structural steel shall have Fy = 36 ksi. Beams, structural tees, plates & angles shall be ASTM A36. Tubes shall be ASTM A501.
2. All new welding (both shop & field) shall be E70xx, low hydrogen. Clean existing surfaces to be welded.
3. Bolts shall be ASTM A325 F.
4. All existing construction shall be field measured for both location and elevation before fabrication of new steel. All necessary dimensional adjustments due to field measurements shall be shown on the shop dwgs.
5. All new steel marked (*) shall receive approved spray-on fireproofing. Replace existing fireproofing removed to install new work.
6. Reactions for AISC framed beam connections are shown thus: 27 on plan.
7. (1) Indicates temporary shoring from floor 92 to 91. Install firm remove last.

DESIGNED: JTM

DRAWN: ALF

REVIEWED:

19-A-1150.1

SKILLING, HELLE, CHRISTIANSEN, ROBERTSON — Structural & Civil Engineers

PROJECT: THE WORLD TRADE CENTER | TITLE: TOWER A-FLOORS 91 & 92 - STAIR SUPPORTS | DATE: 5-23-75

REVISIONS

Add. △ 8-8-75

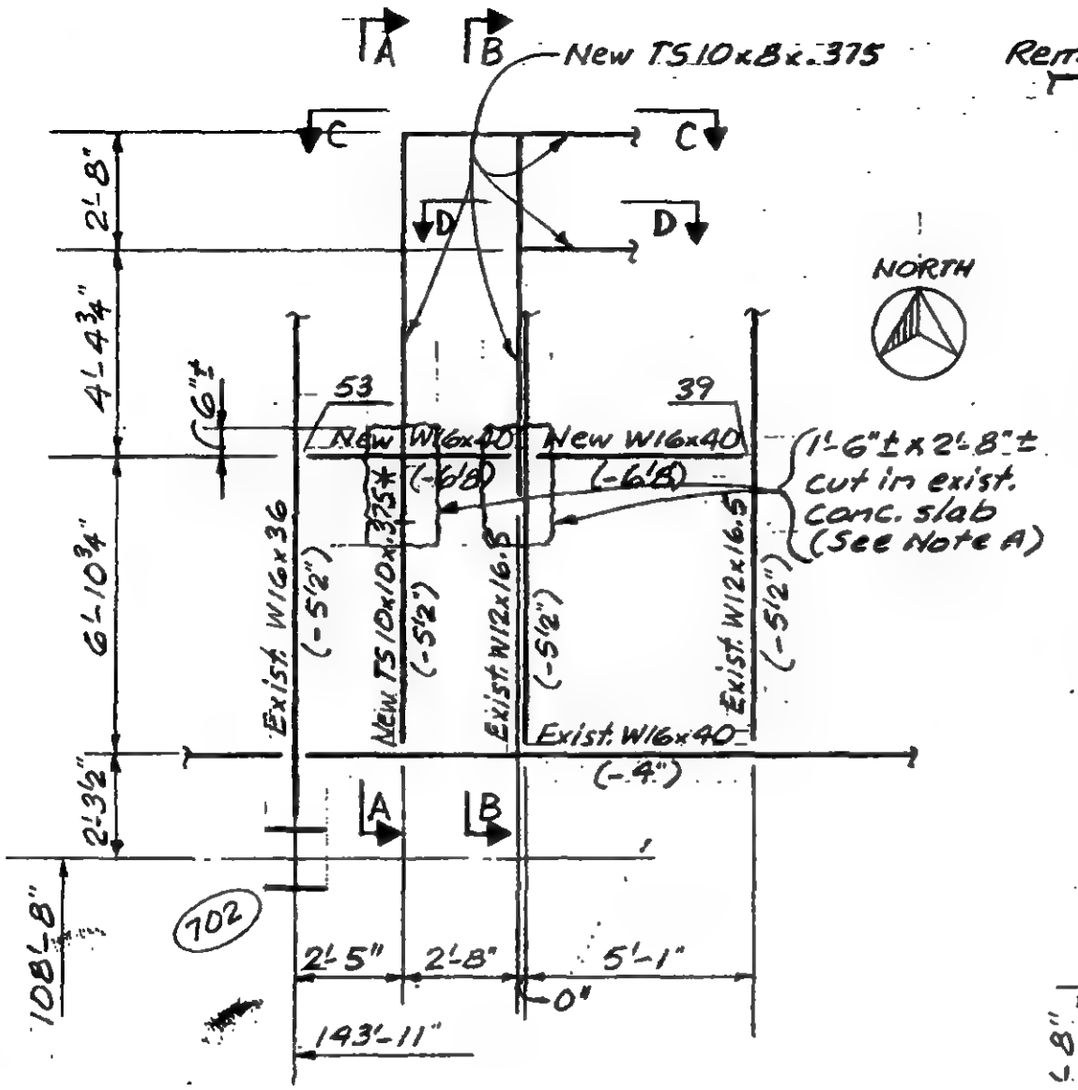

Part Plan @ Floor 91

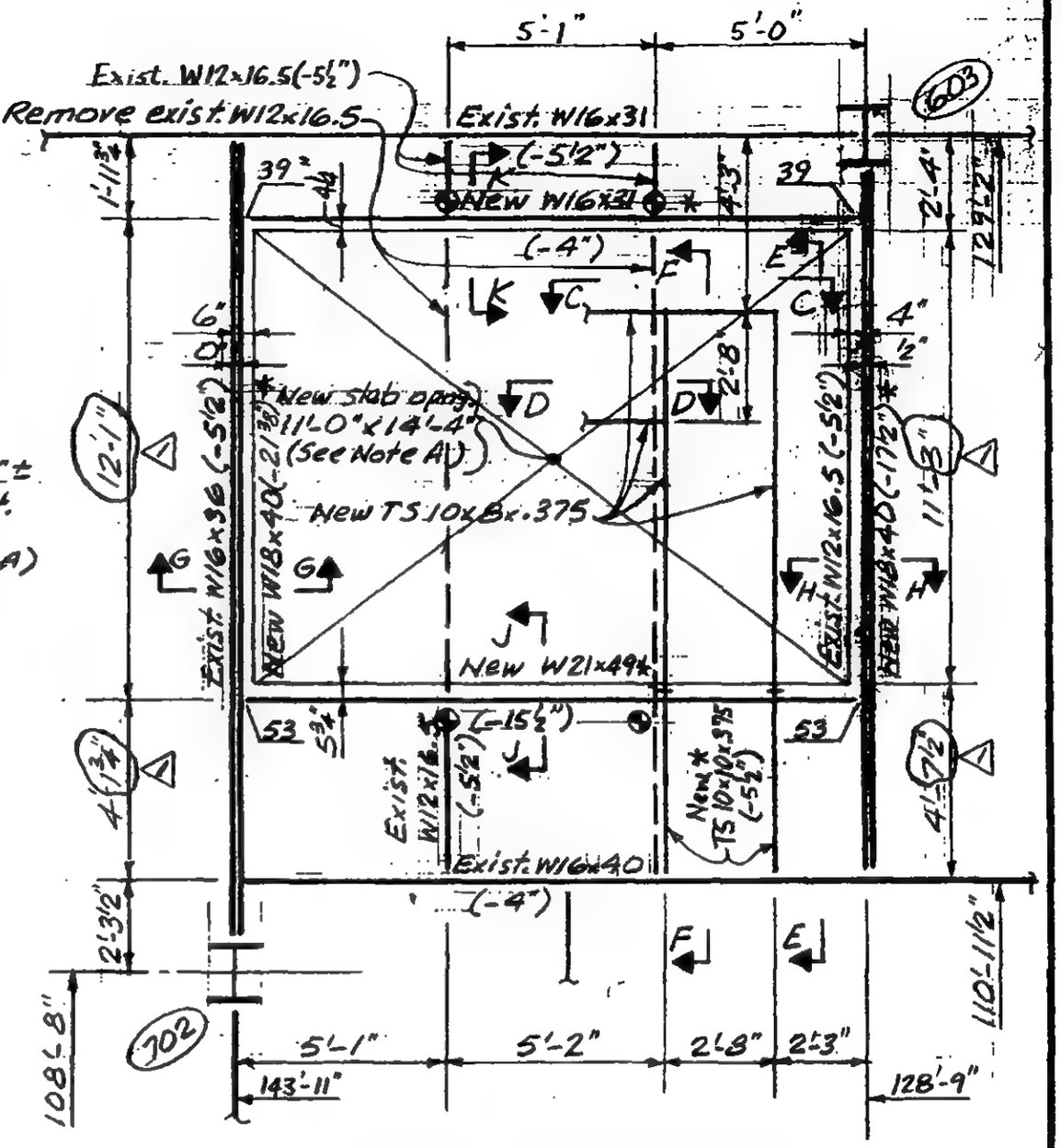

Part Plan @ Floor 92

General Notes:

1. All new structural steel shall have Fy = 36 ksi. Beams, structural tees, plates & angles shall be ASTM A36. Tubes shall be ASTM A501.
2. All new welding (both shop & field) shall be E70xx, low hydrogen. Clean existing surfaces to be welded.
3. Bolts shall be ASTM A325 F.
4. All existing construction shall be field measured for both location and elevation before fabrication of new steel. All necessary dimensional adjustments due to field measurements shall be shown on the shop dwgs.
5. All new steel marked (*) shall receive approved spray-on fireproofing. Replace existing fireproofing removed to install new work.
6. Reactions for AISC framed beam connections are shown thus: 27 / on plan.
7. ◔ Indicates temporary shoring from floor 92 to 91. Install first, remove last.

LICENSED PROFESSIONAL ENGINEER — LESLIE E. ROBERTSON — No. 34360 — UNIVERSITY OF THE STATE OF NEW YORK

DESIGNED JTM

DRAWN ALF

REVIEWED

19-A-1150.1

SKILLING, HELLE, CHRISTIANSEN, ROBERTSON — Structural & Civil Engineers

PROJECT: THE WORLD TRADE CENTER | TITLE: TOWER A-FLOORS 91 & 92 - STAIR SUPPORTS | DATE: 5-23-75

REVISIONS

14-4½
9-4 3/16
5-0 5/16

6¾
6½
13¼
2 3/16
11 3/16

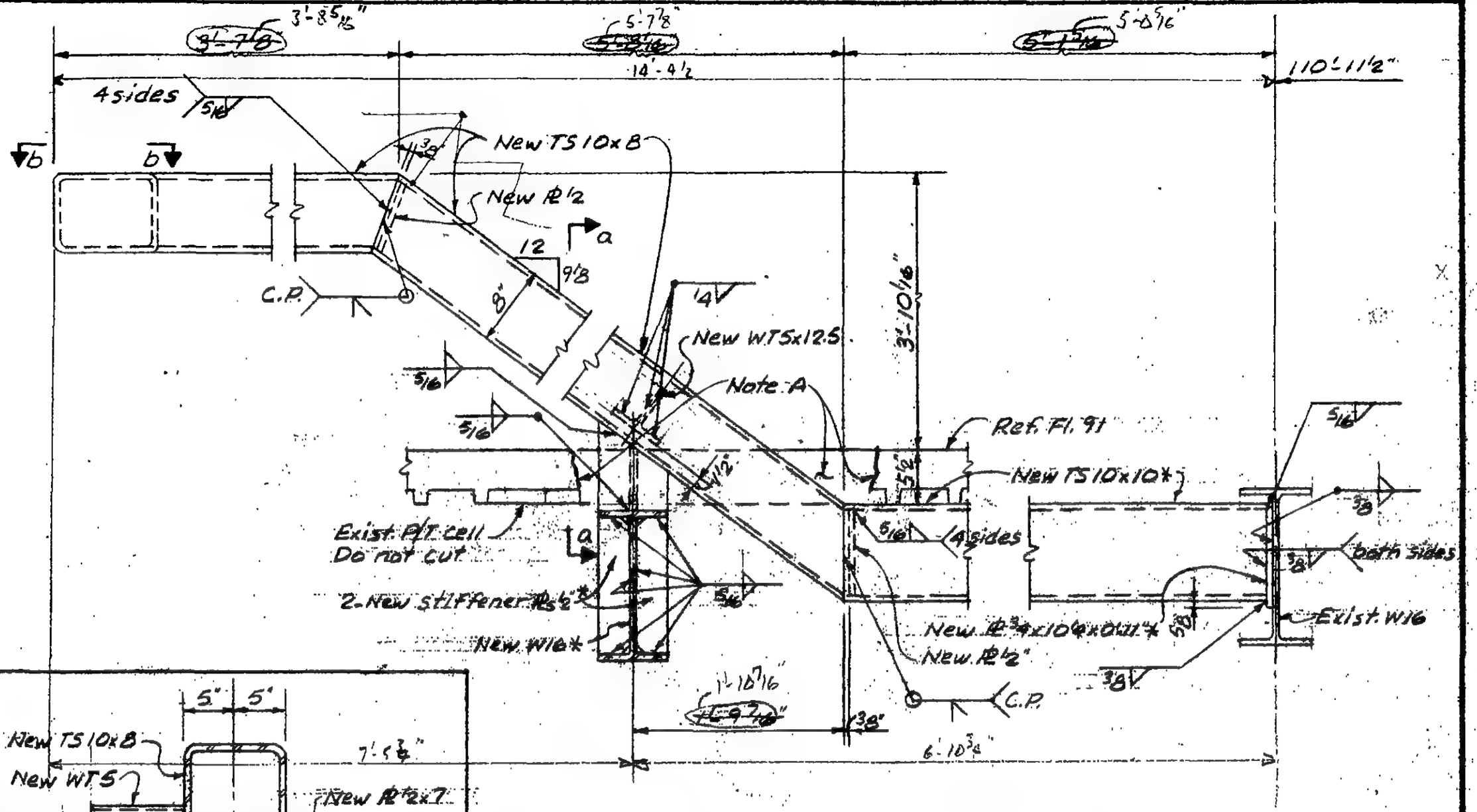

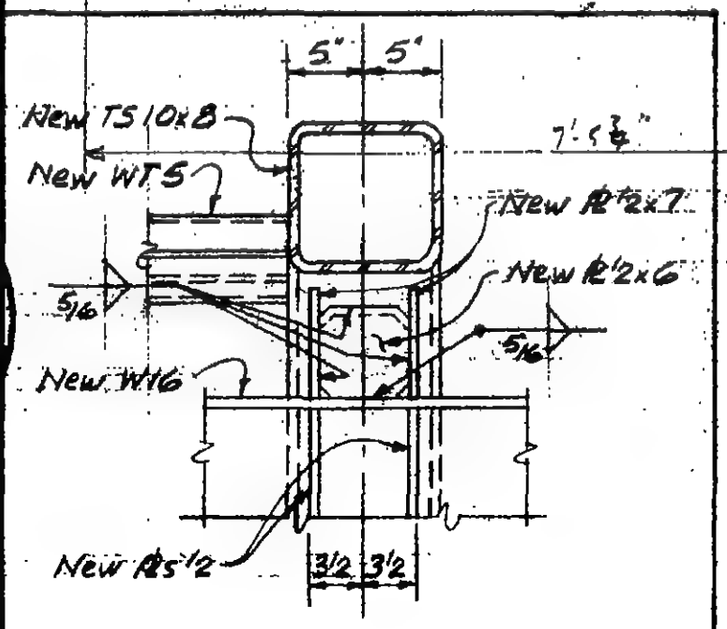

a

Note A: Cut exist. concrete slab and steel deck without damage to exist. reinf. Hook exist. reinf. at face of new steel or new opening. Patch slab by applying epoxy bonding compound to joint and casting lightweight concrete patch with f'c = 4000 psi. Remove debris from site.

REGISTERED PROFESSIONAL ENGINEER — LESLIE E. ROBERTSON — No. 34360 — STATE OF NEW YORK

DESIGNED JFM
DRAWN ALF
REVIEWED

A

19-A-1150.2

SKILLING, HELLE, CHRISTIANSEN, ROBERTSON — Structural & Civil Engineers

PROJECT: THE WORLD TRADE CENTER | TITLE: TOWER A - FLOORS 91 & 92 - STAIR SUPPORTS | DATE: 5-23-75

REVISIONS

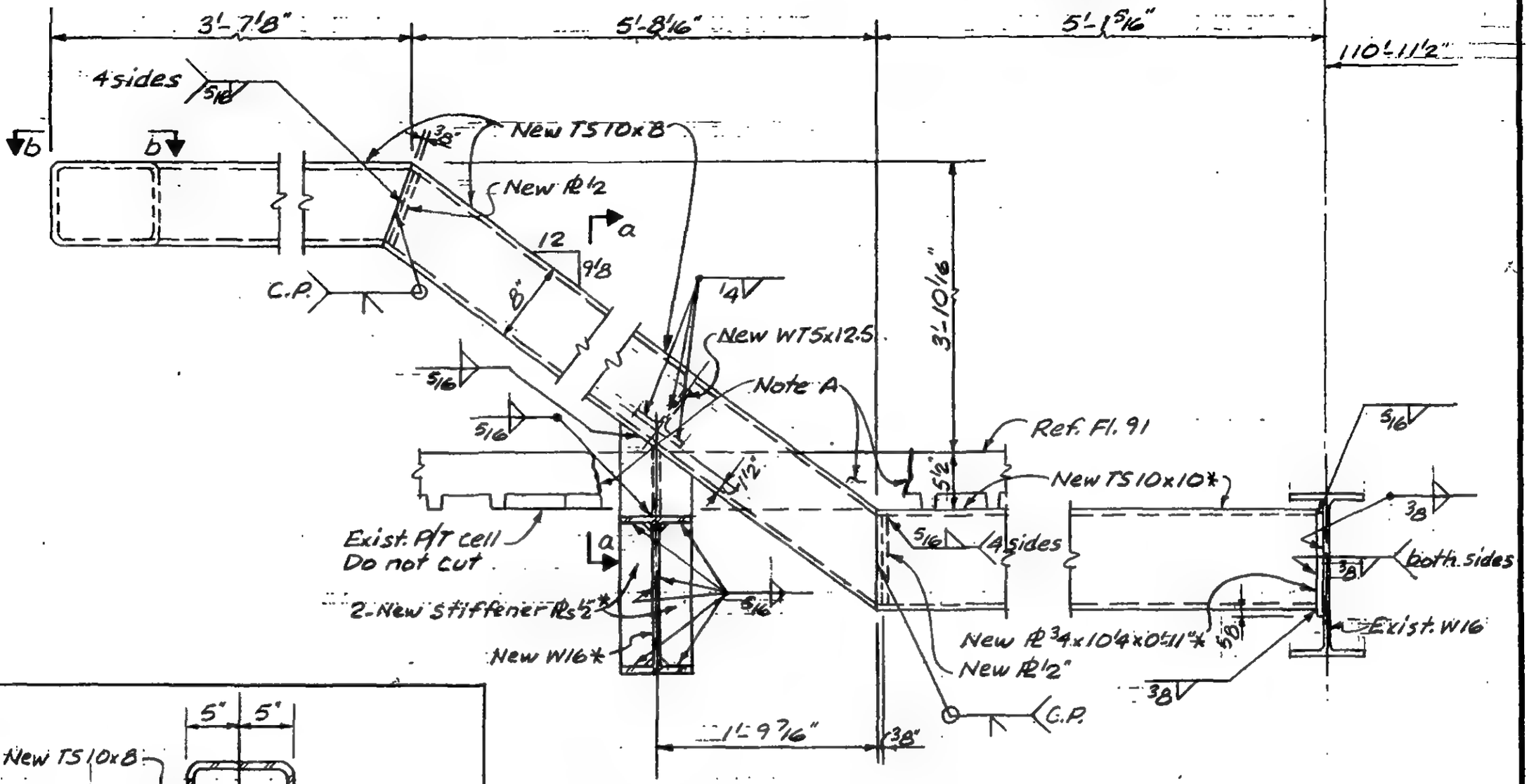

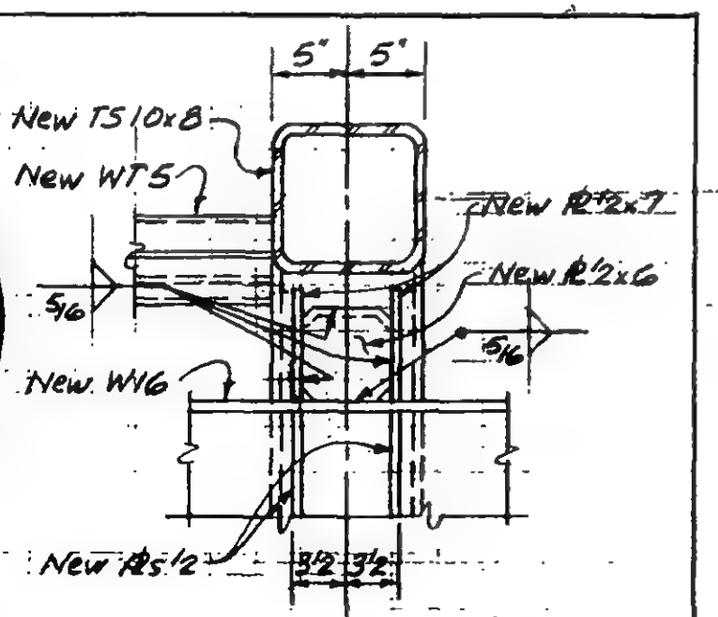

a

Note A. Cut exist. concrete slab and steel deck without damage to exist. reinf. Hook exist. reinf. at face of new steel or new opening. Patch slab by applying epoxy bonding compound to joint and casting lightweight concrete patch with f'c = 4000 psi. Remove debris from site.

LICENSED PROFESSIONAL ENGINEER — LESLIE E. ROBERTSON — No. 34360 — STATE OF NEW YORK

DESIGNED JTM
DRAWN ALF
REVIEWED

A

T9-A-1150.2

SKILLING, HELLE, CHRISTIANSEN, ROBERTSON — Structural & Civil Engineers

PROJECT: THE WORLD TRADE CENTER | TITLE: TOWER A-FLOORS 91 & 92 - STAIR SUPPORTS | DATE: 5-23-75

VISIONS

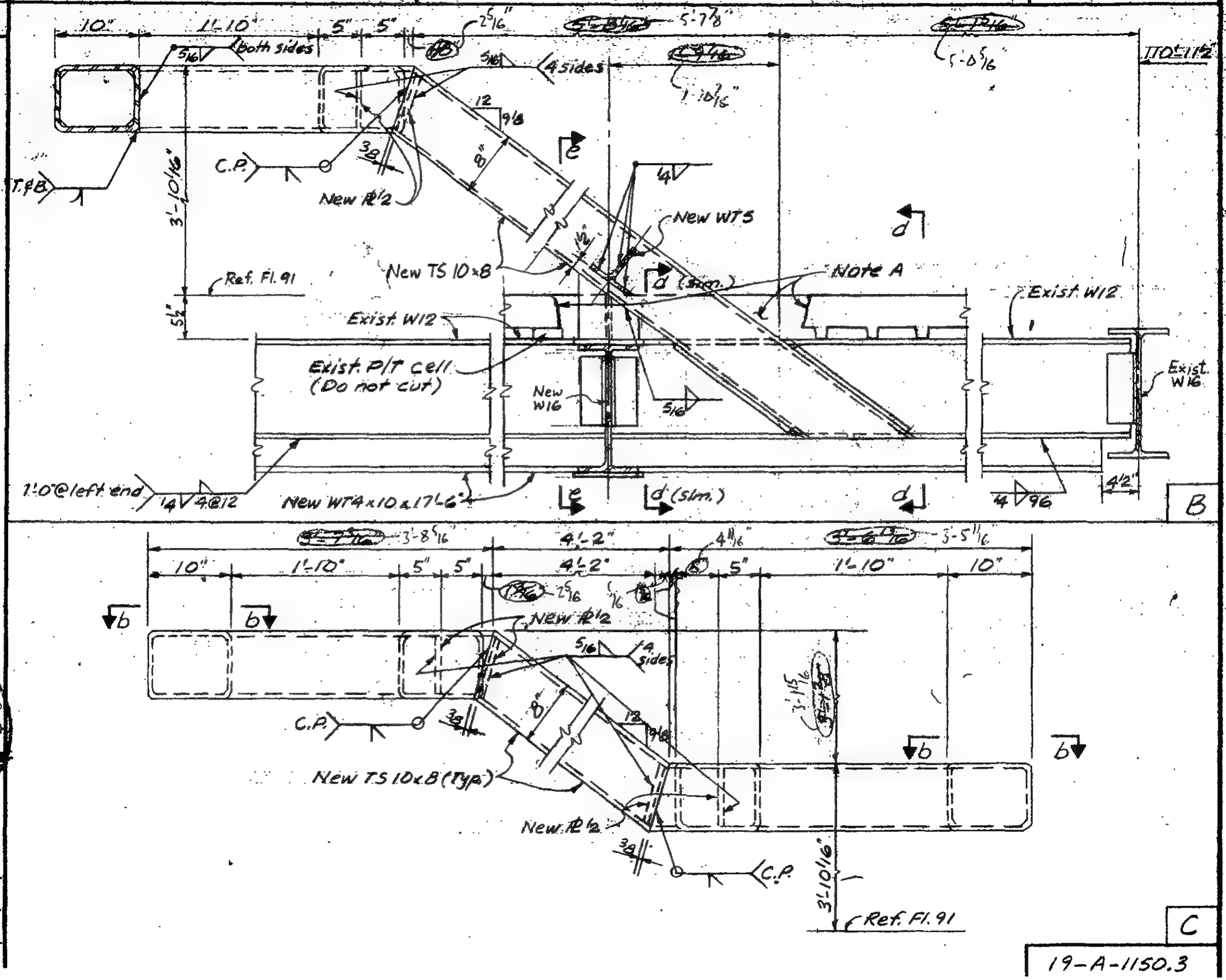

LICENSED PROFESSIONAL ENGINEER
LESLIE E. ROBERTSON
No. 34360
STATE OF NEW YORK

DESIGNED JTM
DRAWN ALF
REVIEWED

SKILLING, HELLE, CHRISTIANSEN, ROBERTSON — Structural & Civil Engineers

PROJECT: THE WORLD TRADE CENTER | TITLE: TOWER A - FLOORS 91 & 92 - STAIR SUPPORTS | DATE: 6-23-75

REVISIONS

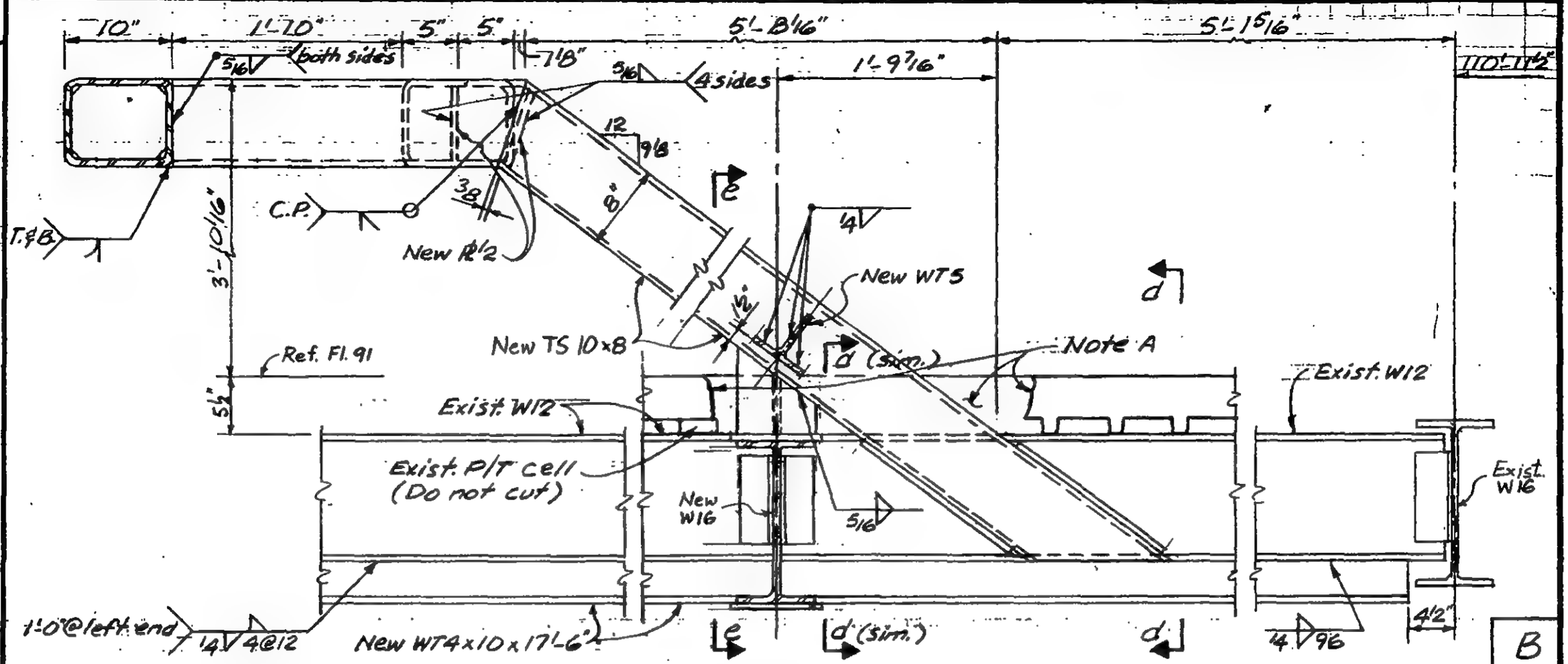

LICENSED PROFESSIONAL ENGINEER — LESLIE E. ROBERTSON — No. 34360 — UNIVERSITY OF THE STATE OF NEW YORK

DESIGNED: JTM
DRAWN: ALF
REVIEWED:

79-A-1150.3

SKILLING, HELLE, CHRISTIANSEN, ROBERTSON — Structural & Civil Engineers

PROJECT: THE WORLD TRADE CENTER | TITLE: TOWER A-FLOORS 91 & 92-STAIR SUPPORTS | DATE: 5-23-75

REVISIONS

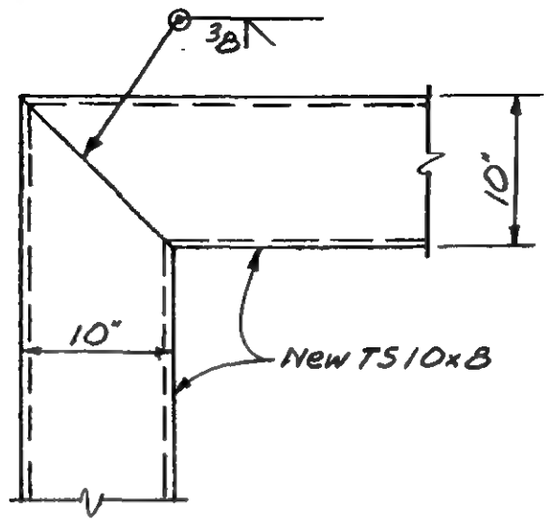

b

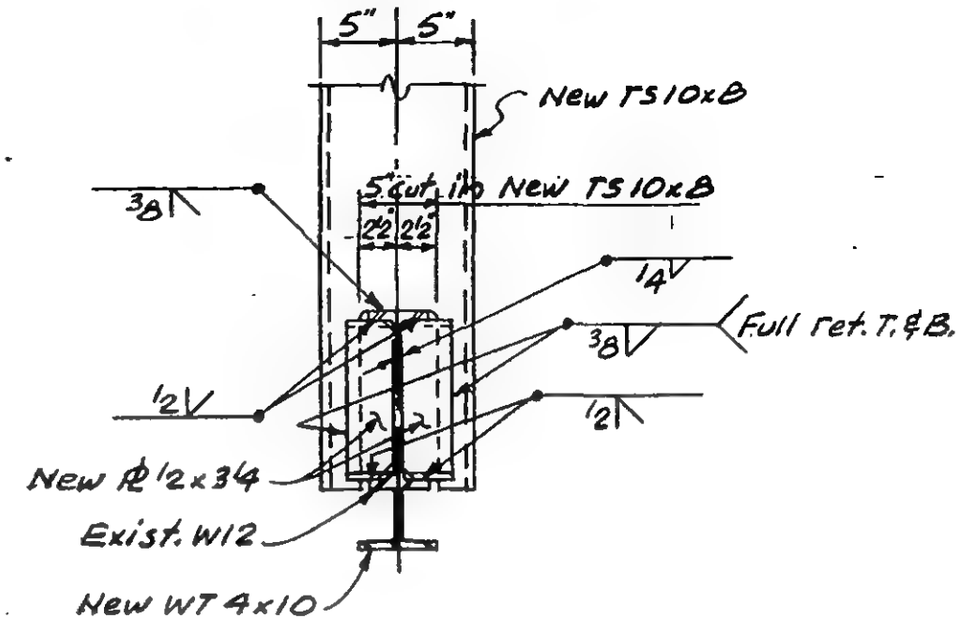

d

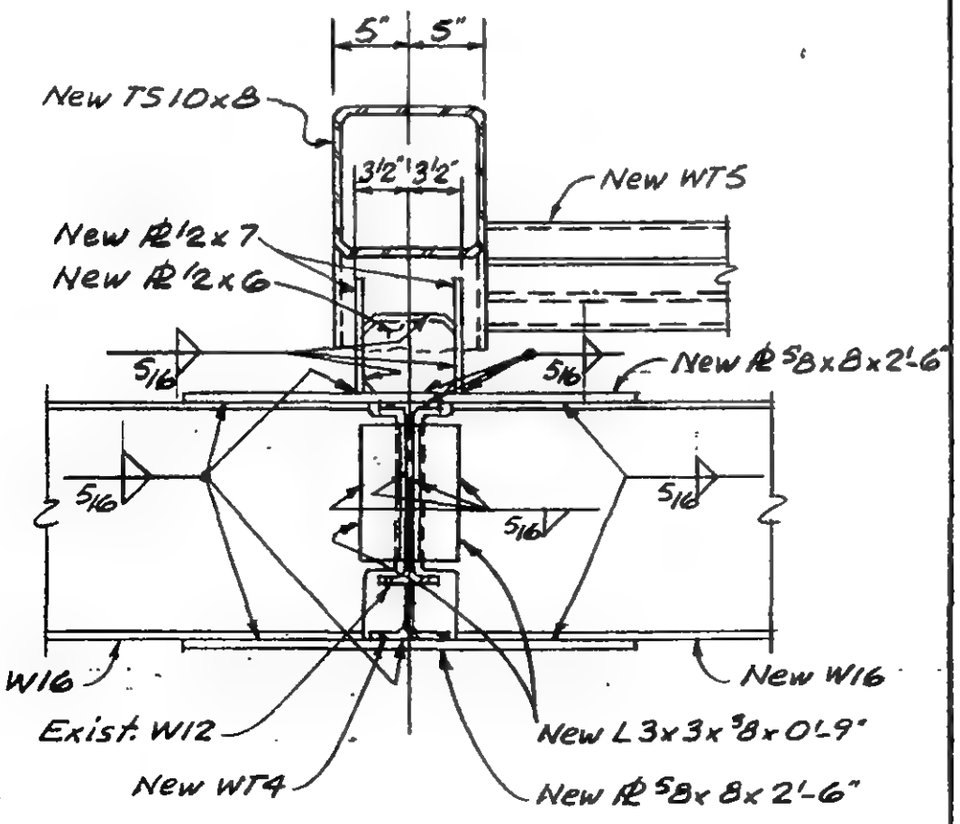

e

LICENSED PROFESSIONAL ENGINEER
LESLIE E. ROBERTSON
No. 34360
UNIVERSITY OF THE STATE OF NEW YORK

DESIGNED JTM
DRAWN ALF
REVIEWED

19-A-1150.4

SKILLING, HELLE, CHRISTIANSEN, ROBERTSON — Structural & Civil Engineers

PROJECT: THE WORLD TRADE CENTER | TITLE: TOWER A-FLOORS 91 & 92 - STAIR SUPPORTS | DATE: 5-23-75

REVISIONS

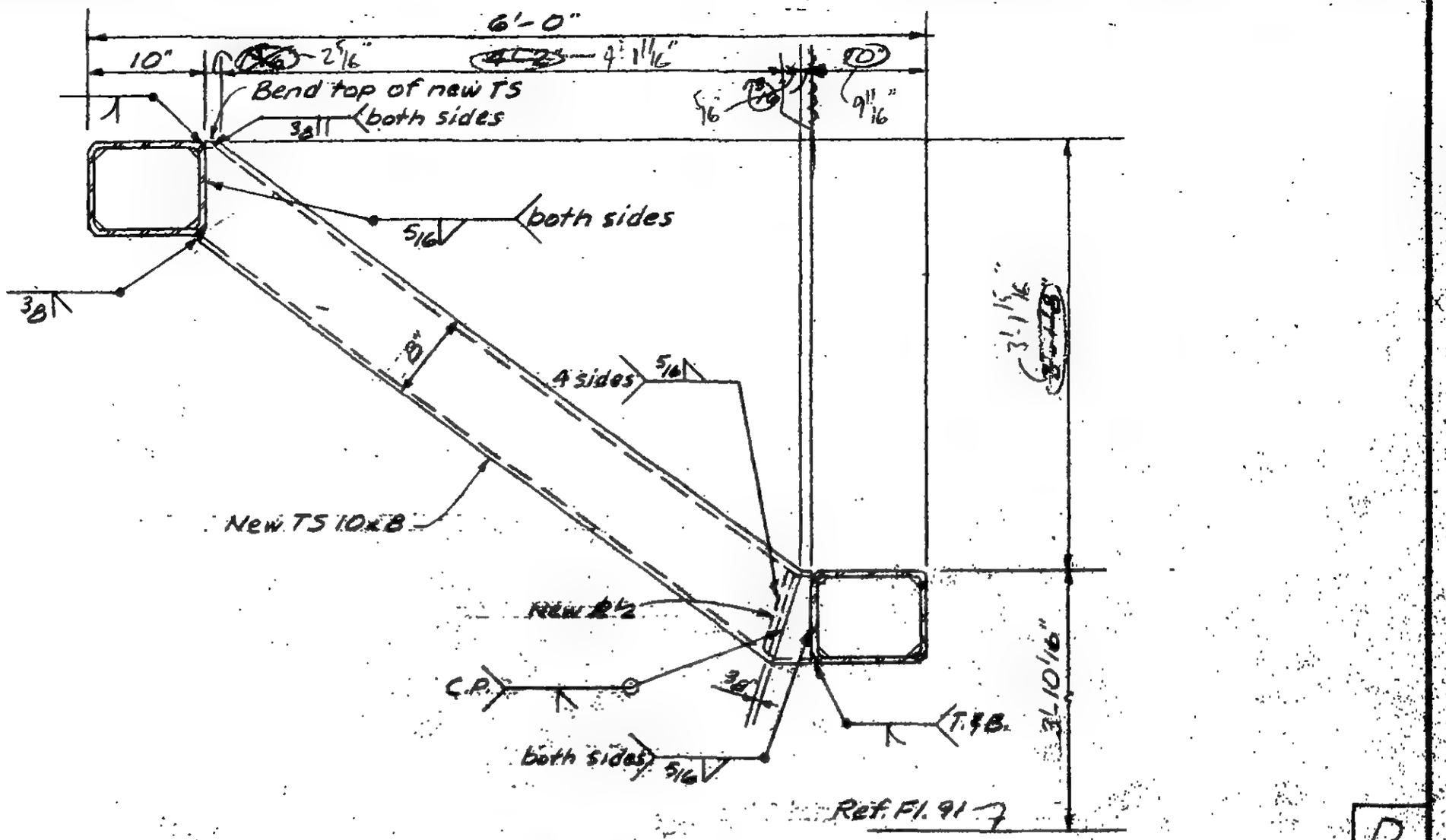

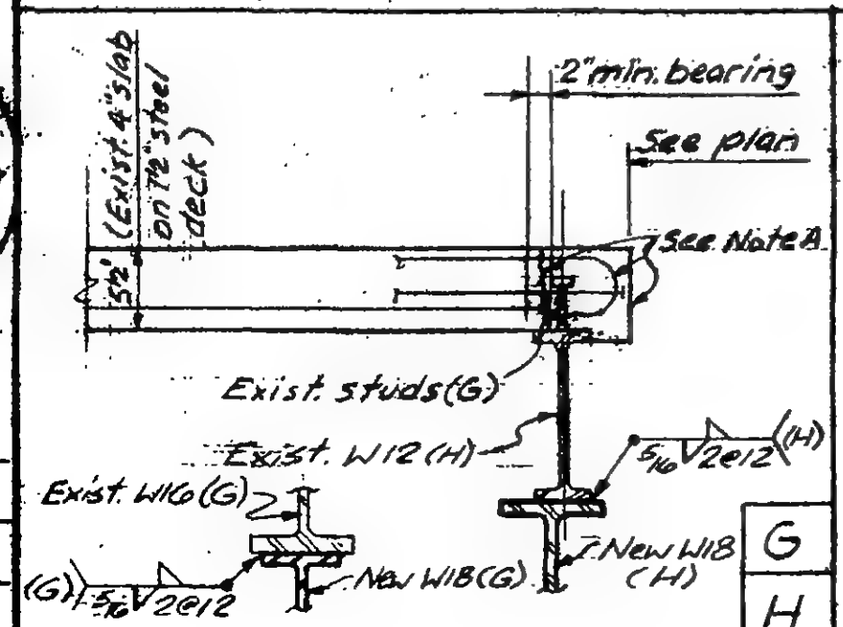

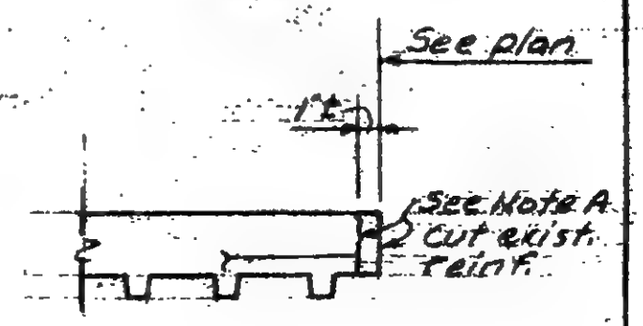

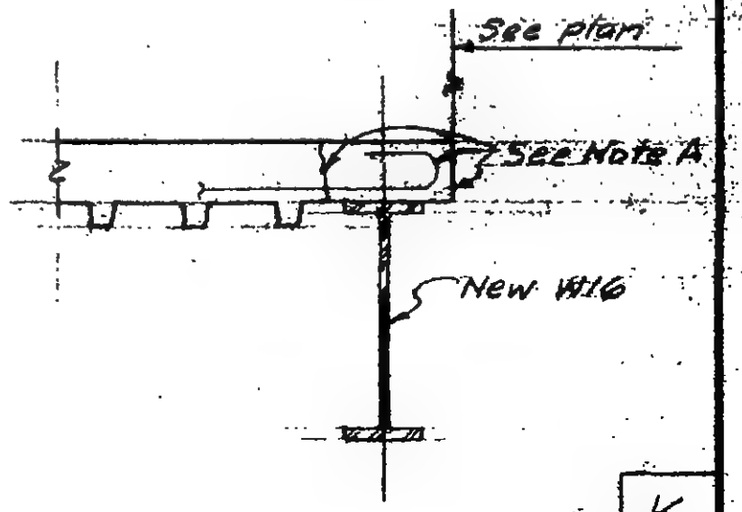

LICENSED PROFESSIONAL ENGINEER
LESLIE E. ROBERTSON
No. 34360
STATE OF NEW YORK

DESIGNED JTM
DRAWN ALF
REVIEWED

19-A-1150.5

SKILLING, HELLE, CHRISTIANSEN, ROBERTSON — Structural & Civil Engineers

PROJECT: THE WORLD TRADE CENTER | TITLE: TOWER A-FLOORS 91 & 92 - STAIR SUPPORTS | DATE: 5-23-75

REVISIONS

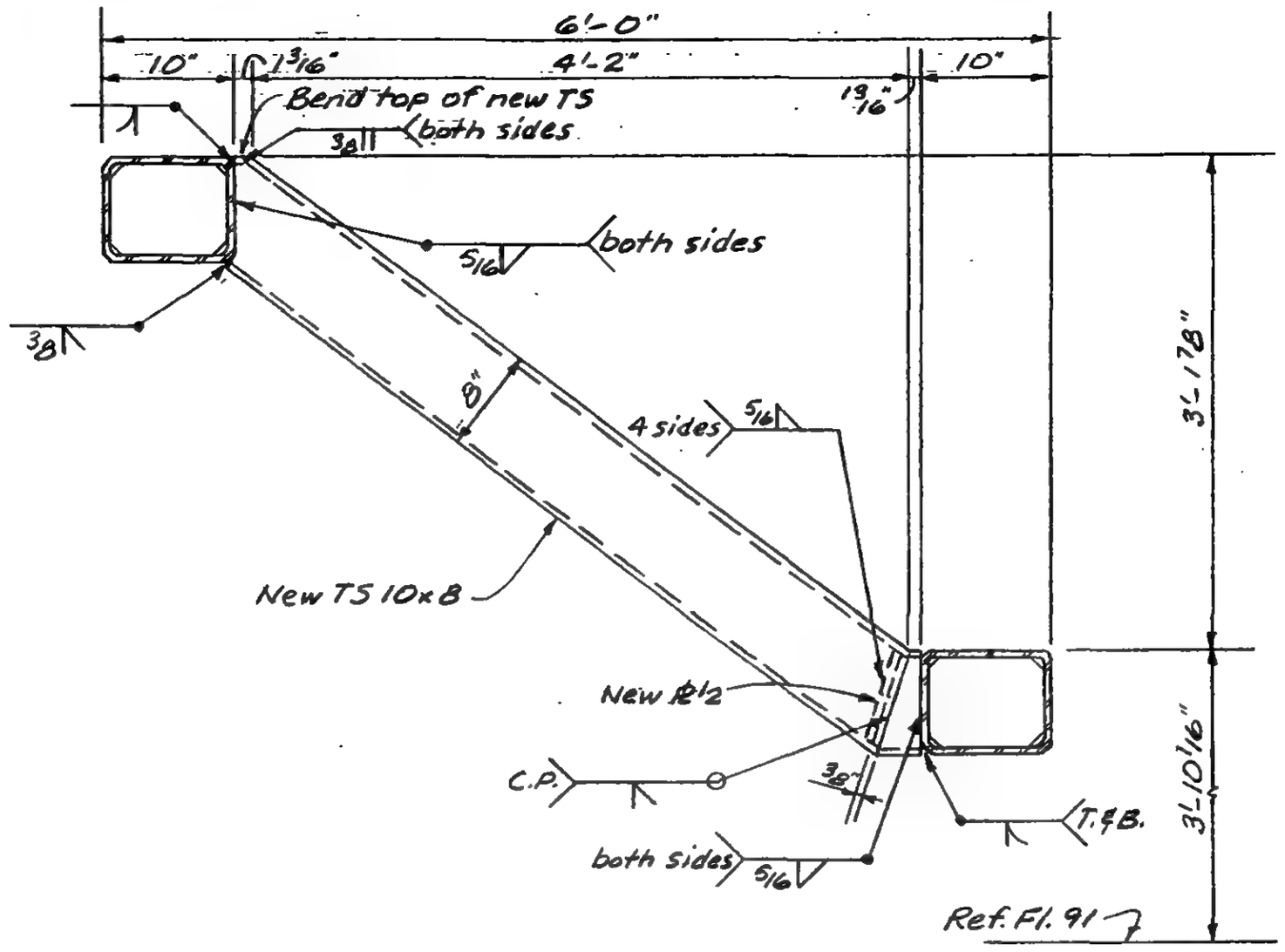

D

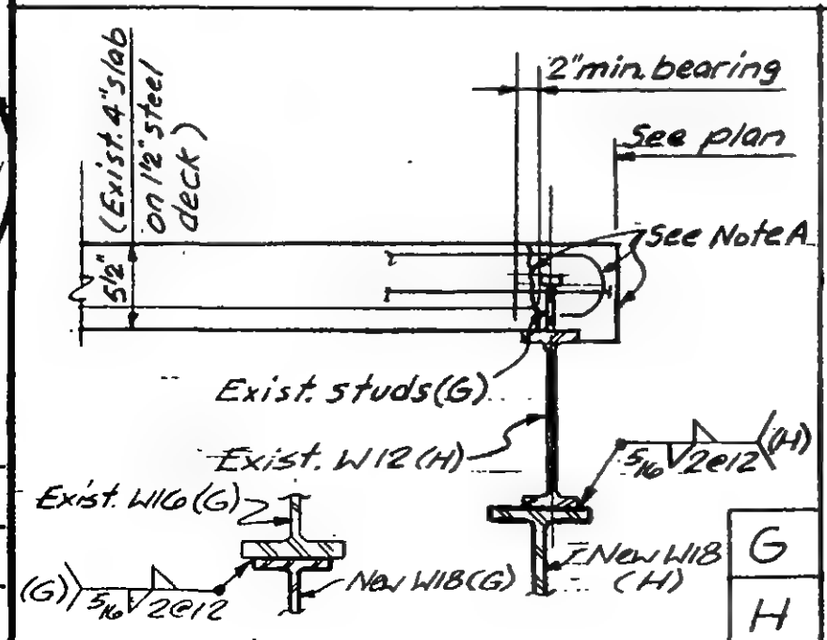

G

H

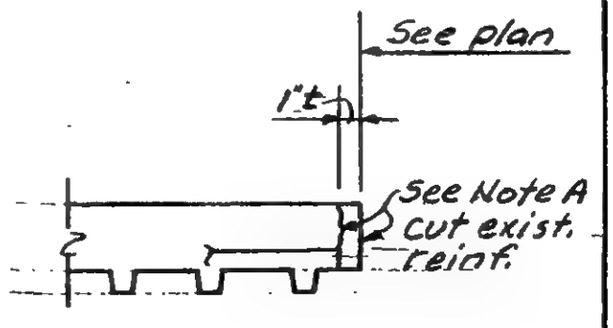

J

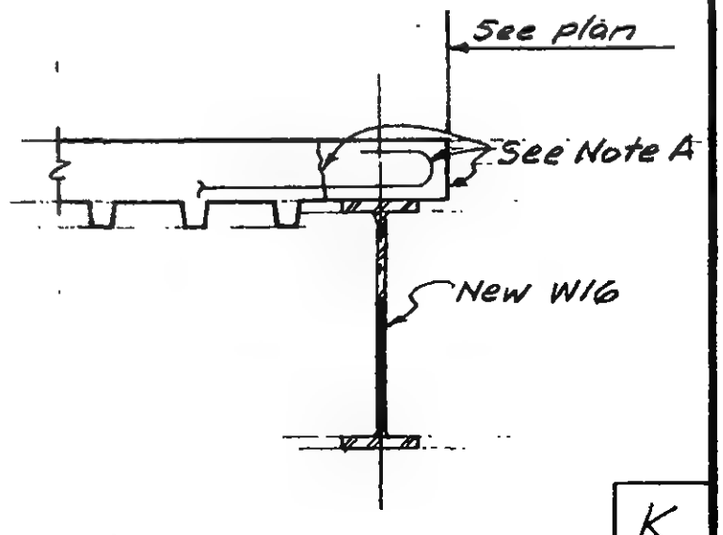

K

LICENSED PROFESSIONAL ENGINEER — LESLIE E. ROBERTSON — No. 34360 — UNIVERSITY OF THE STATE OF NEW YORK

DESIGNED JTM

DRAWN ALF

REVIEWED

19-A-1150.5

SKILLING, HELLE, CHRISTIANSEN, ROBERTSON — Structural & Civil Engineers

PROJECT: THE WORLD TRADE CENTER | TITLE: TOWER A - FLOORS 91 & 92 - STAIR SUPPORTS | DATE: 5-23-75

REVISIONS

Addl. 1 8-8-75

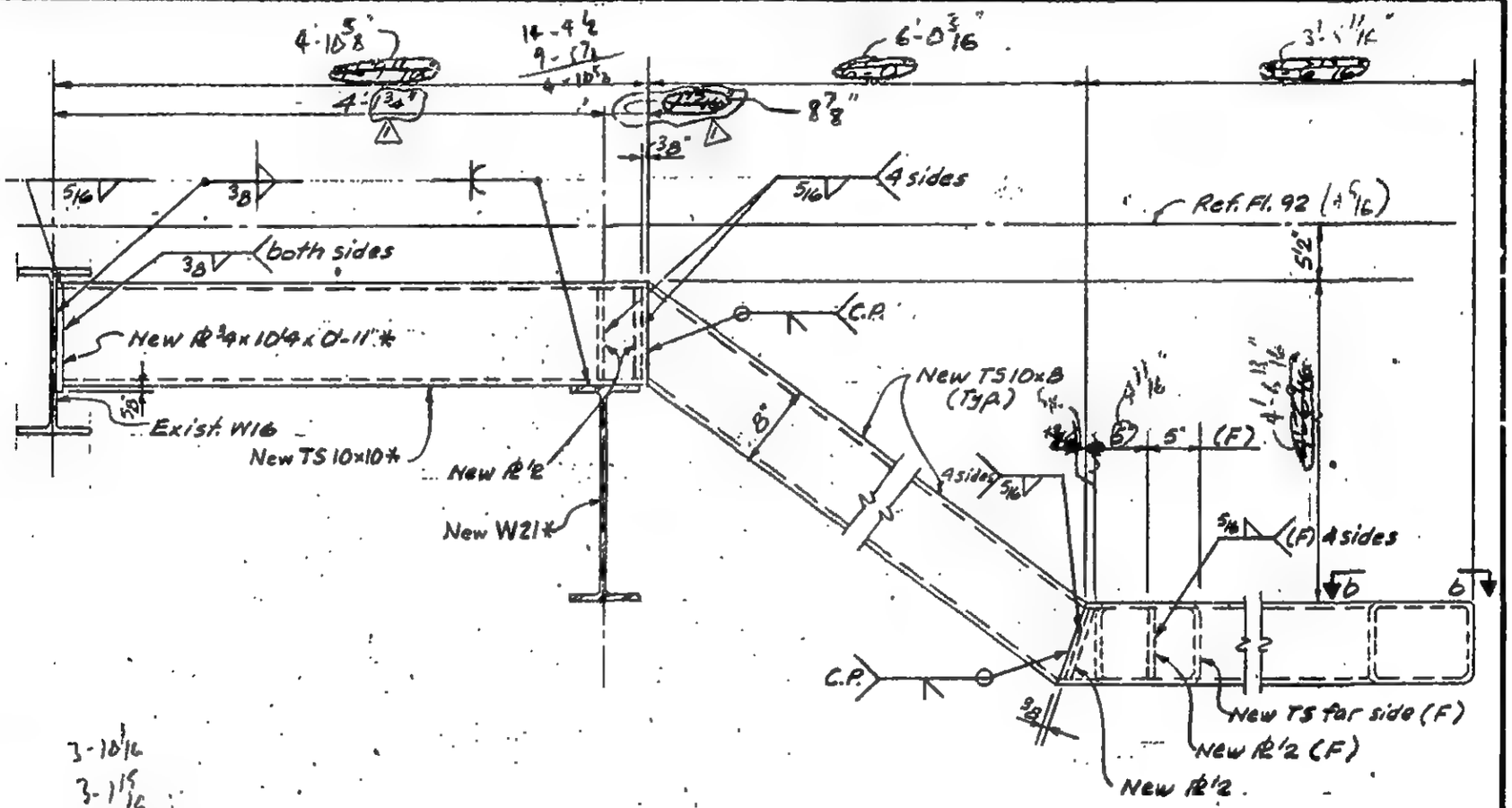

LICENSED PROFESSIONAL ENGINEER — LESLIE E. ROBERTSON — No. 34360 — REGISTERED IN THE STATE OF NEW YORK

DESIGNED JTM

DRAWN ALF

REVIEWED

E
F

19-A-1150.6

SKILLING, HELLE, CHRISTIANSEN, ROBERTSON — Structural & Civil Engineers

PROJECT: THE WORLD TRADE CENTER | TITLE: TOWER A-FLOORS 91 & 92 - STAIR SUPPORTS | DATE: 5-23-75

REVISIONS

Add. 1 8-8-75

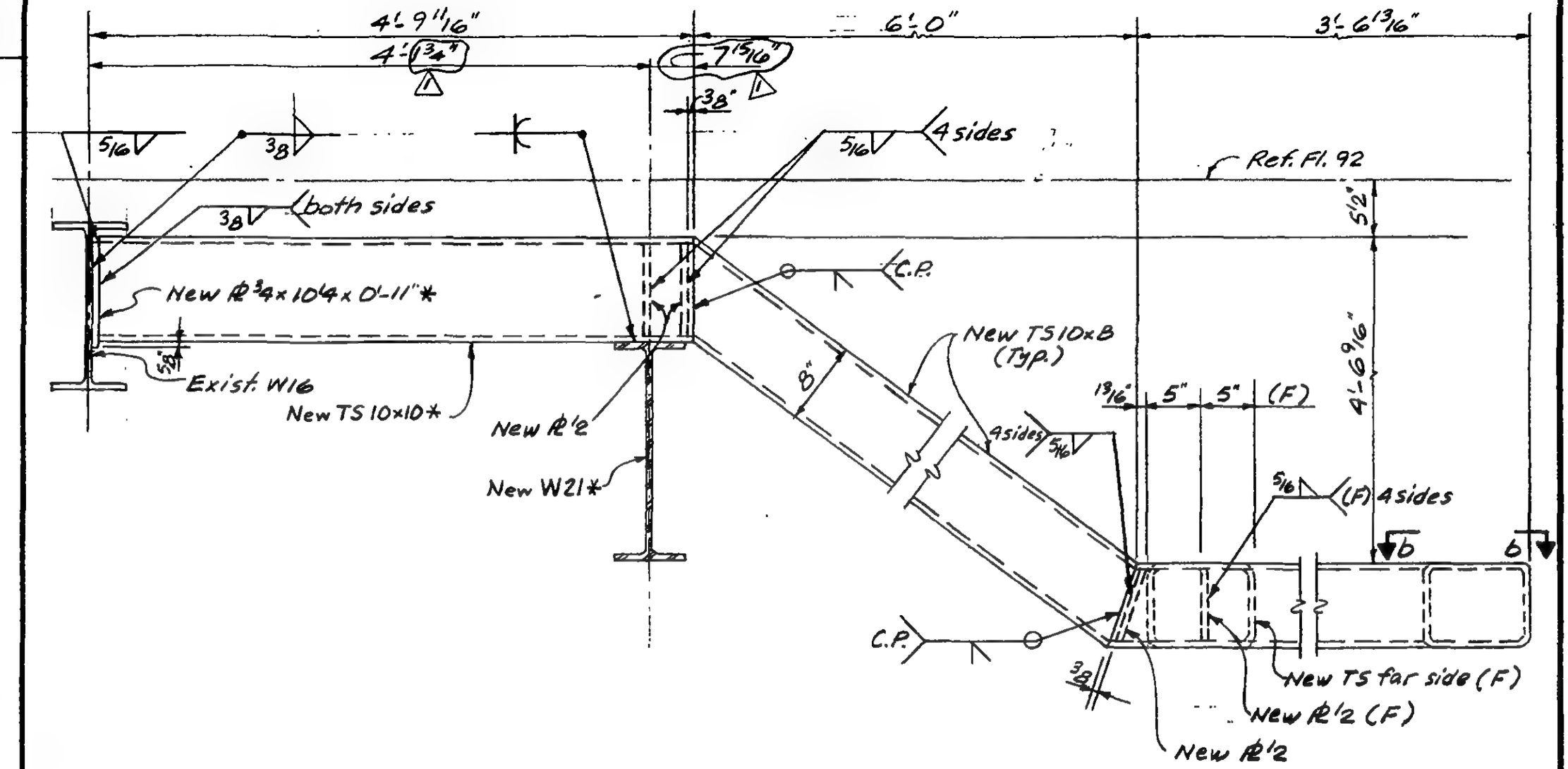

LICENSED PROFESSIONAL ENGINEER — LESLIE E. ROBERTSON — No. 34360 — UNIVERSITY OF THE STATE OF NEW YORK

DESIGNED JTM

DRAWN ALF

REVIEWED

E

F

19-A-1150.6

SKILLING, HELLE, CHRISTIANSEN, ROBERTSON — Structural & Civil Engineers

PROJECT: THE WORLD TRADE CENTER | TITLE: FIELD REPAIR EL. 310 SPANDREL TOWER A | DATE: 9-4-75

REVISIONS

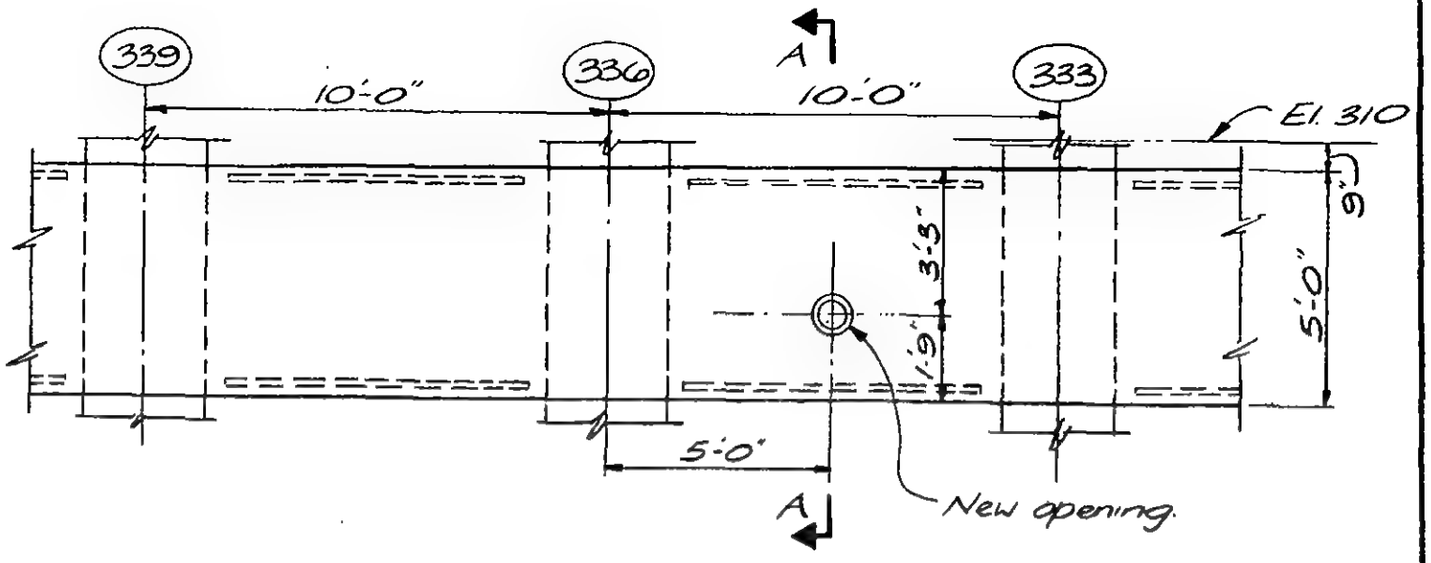

ELEVATION

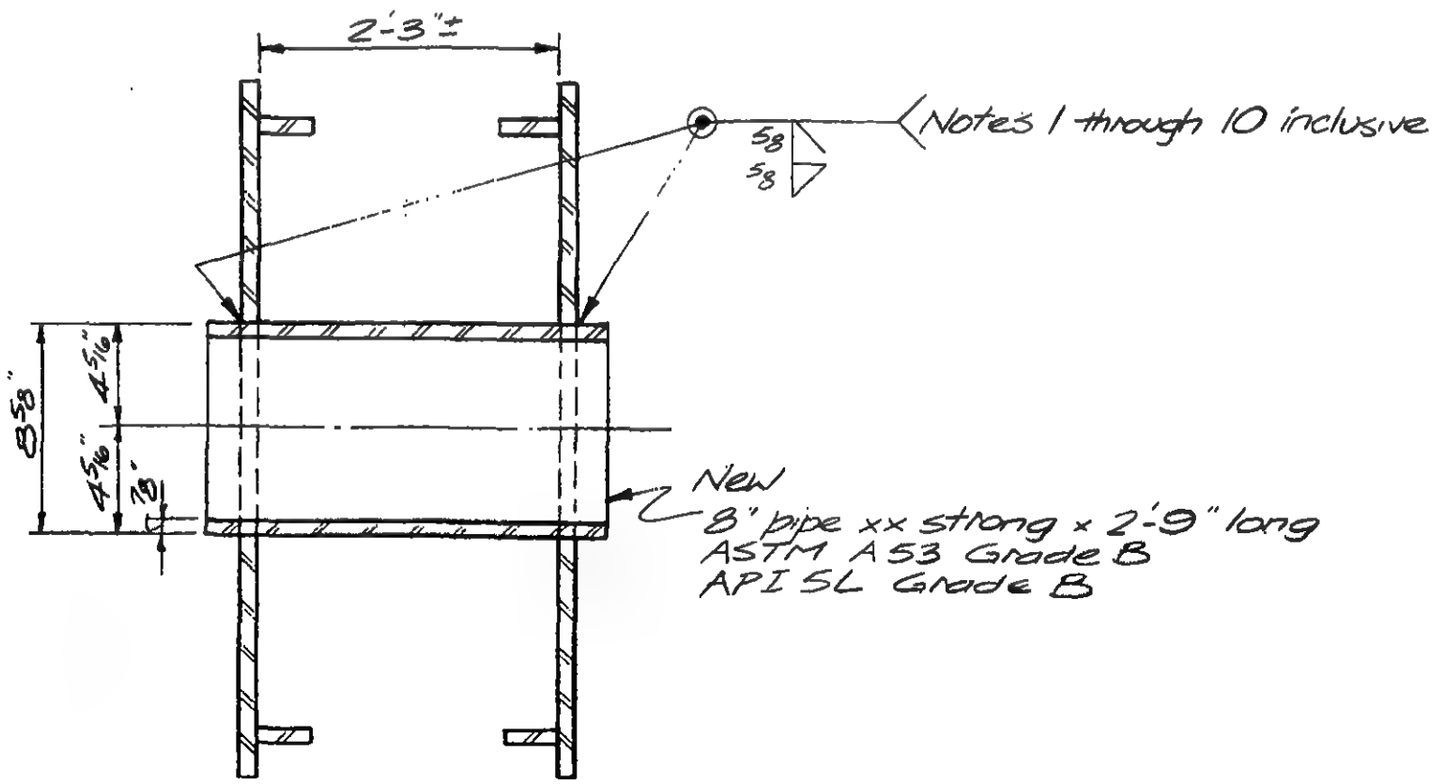

1. Scribe circular cut guide line on face of each spandrel using compass, circular guide line to have a diameter of 8-7/8 inches.
2. Carefully gas burn with oxy-acetelyne torch each hole making sure to provide a smooth, notch-free cut as close as possible to (but always inside) the cut line.
3. Repair with E7018 weld metal all notches or excessive serrations, then grind smooth.
4. Insert 8"XXS pipe, center in holes, and tack weld in place.
5. Arcair gouge 5/8 inch deep by 40 to 50 degree bevel into spandrel base metal top 1/2 (180°) of pipe, one spandrel. Take care not to gouge pipe.
6. Preheat and fill weld groove with E7018 weld metal with sufficient weave or stringer bead passes to bring weld metal flush with spandrel face.
7. Repeat 5 and 6 for second spandrel.
8. Perform 5 and 6 for bottom half of pipe, each spandrel. Make sure "bottom half" weld ends are thoroughly fused without void, slag pocker, cracking or cold lap to "top half" weld ends.
9. Perform fillet weld all around each spandrel.
10. UT

LICENSED PROFESSIONAL ENGINEER — LESLIE E. ROBERTSON — No. 34980 — UNIVERSITY OF THE STATE OF NEW YORK

DESIGNED WAB

DRAWN J Barlis

REVIEWED

A

19-A-1151

SCALE

REVISIONS

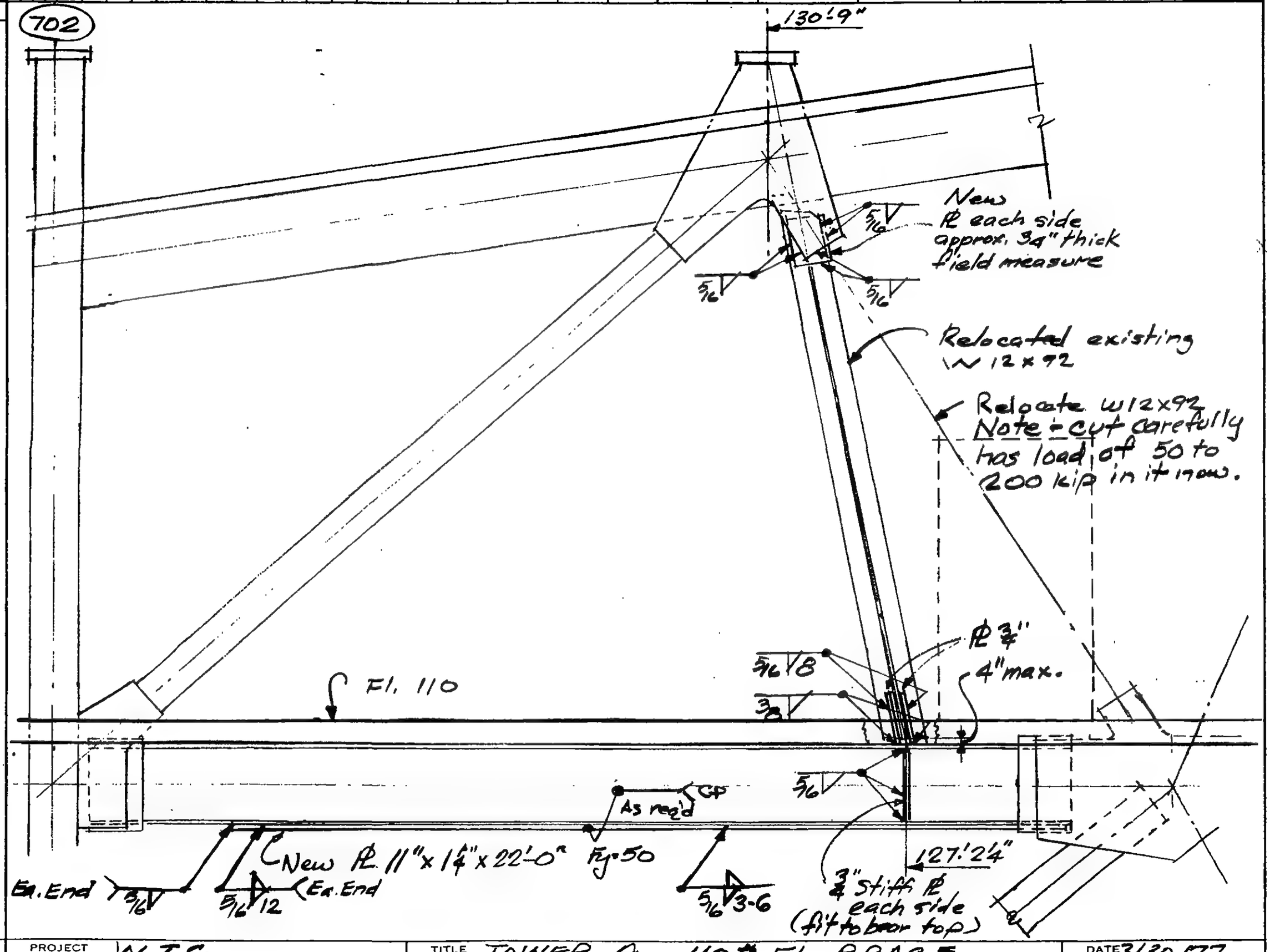

LICENSED PROFESSIONAL ENGINEER · LESLIE E. ROBERTSON · NO. 34380 · UNIVERSITY OF THE STATE OF NEW YORK

DESIGNED	PROJECT WTC	TITLE TOWER A 1105 Fl. BRACE	DATE 3/30/77
DRAWN			
REVIEWED	SKILLING, HELLE, CHRISTIANSEN, ROBERTSON — Structural & Civil Engineers		DWG. NO. 19-A-1152

SKILLING, HELLE, CHRISTIANSEN, ROBERTSON — Structural & Civil Engineers

PROJECT: THE WORLD TRADE CENTER | TITLE: N.E. BLDG FIELD REPAIR DETAIL | DATE: 3-15-71

REVISIONS

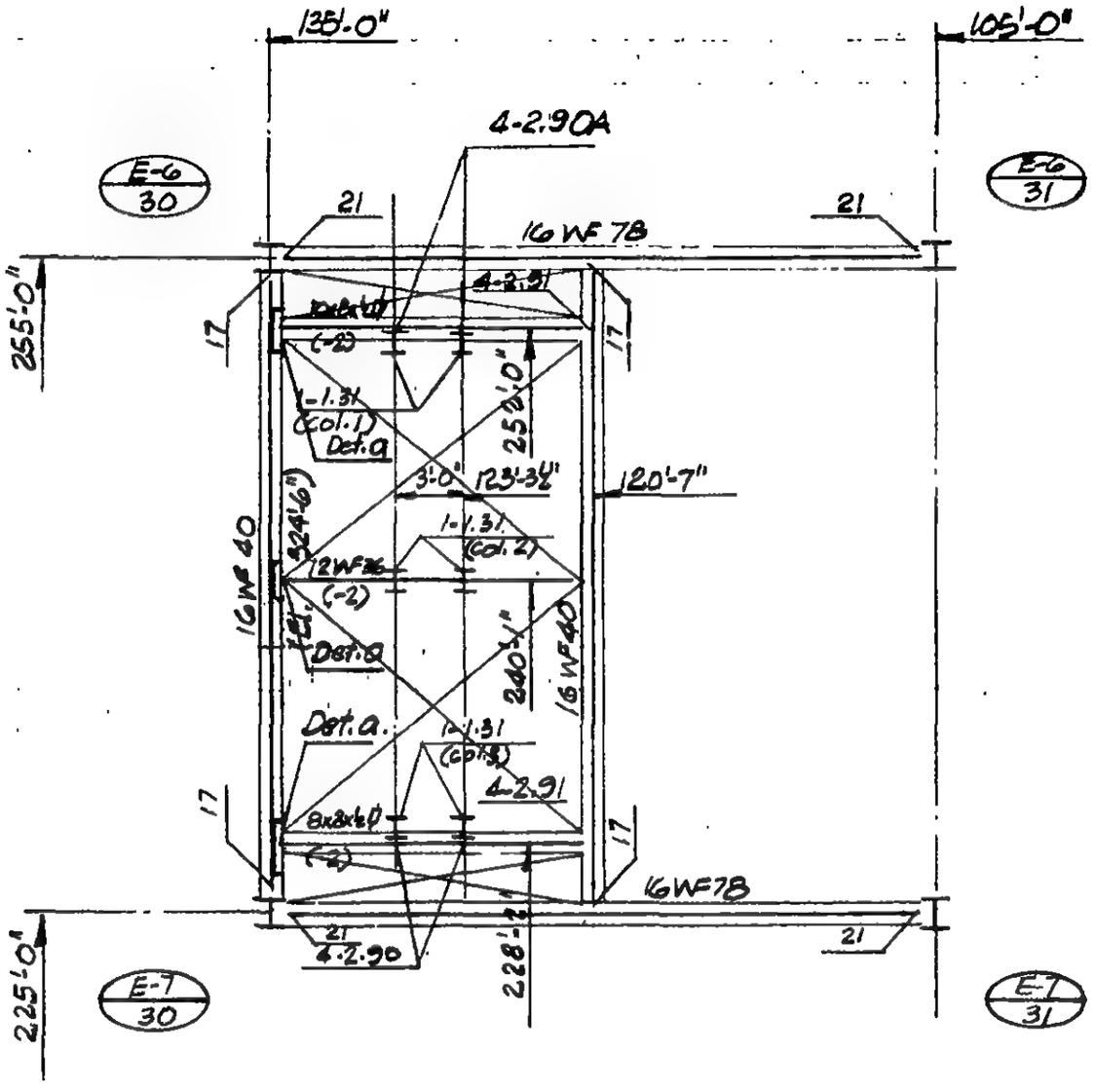

PART PLAN

Top of structural Steel referred from El. 321'-0"

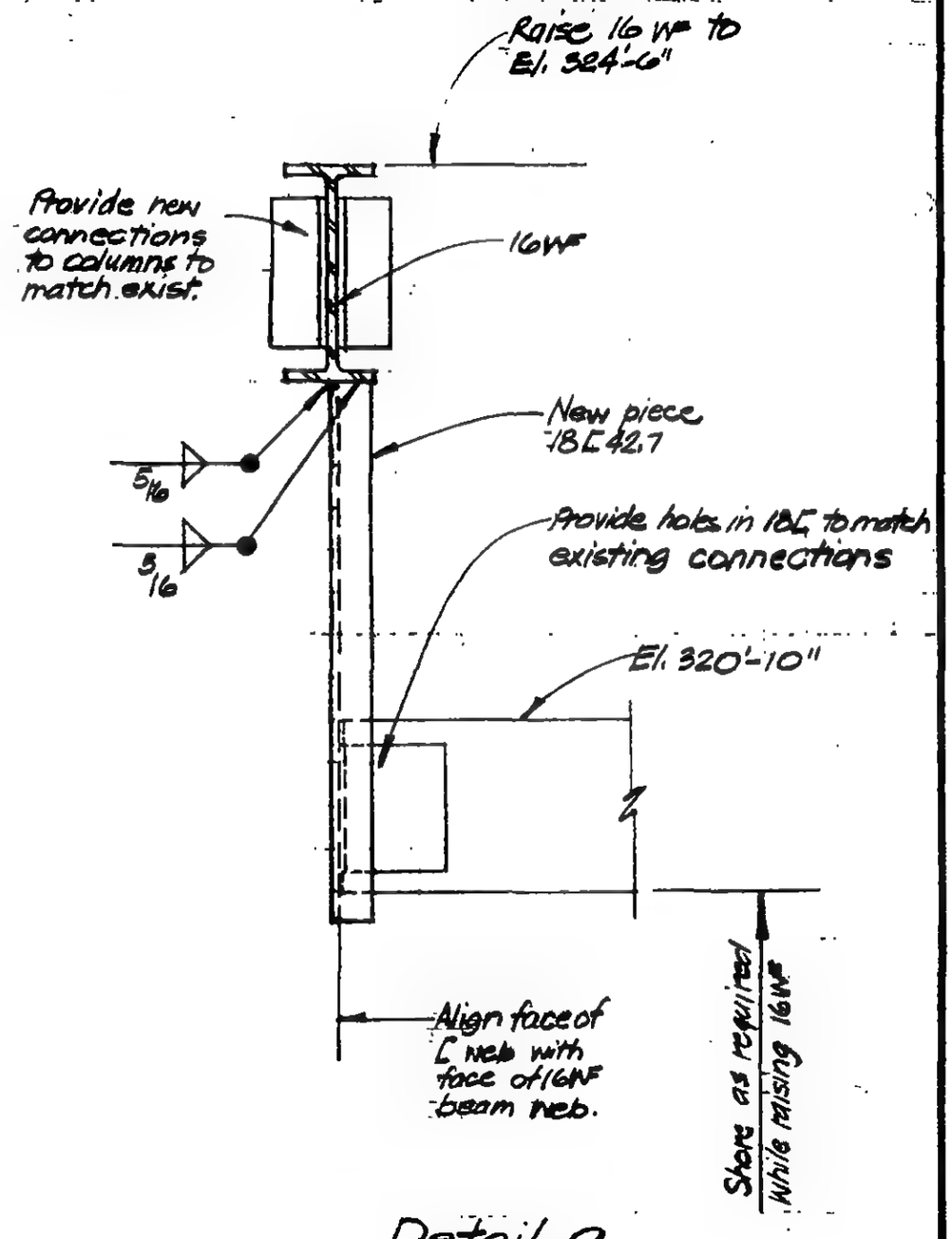

Detail a

LICENSED PROFESSIONAL ENGINEER — LESLIE E. ROBERTSON — No. 34360 — UNIVERSITY OF THE STATE OF NEW YORK

DESIGNED: WAB

DRAWN: P. Ocelli

REVIEWED

19-E-2001

SKILLING, HELLE, CHRISTIANSEN, ROBERTSON — Structural & Civil Engineers

PROJECT THE WORLD TRADE CENTER | TITLE NORTHEAST BUILDING FIELD REPAIR | DATE 3-17-71

REVISIONS

3-22-71

NOTES: 1. Shore beams and slab construction.

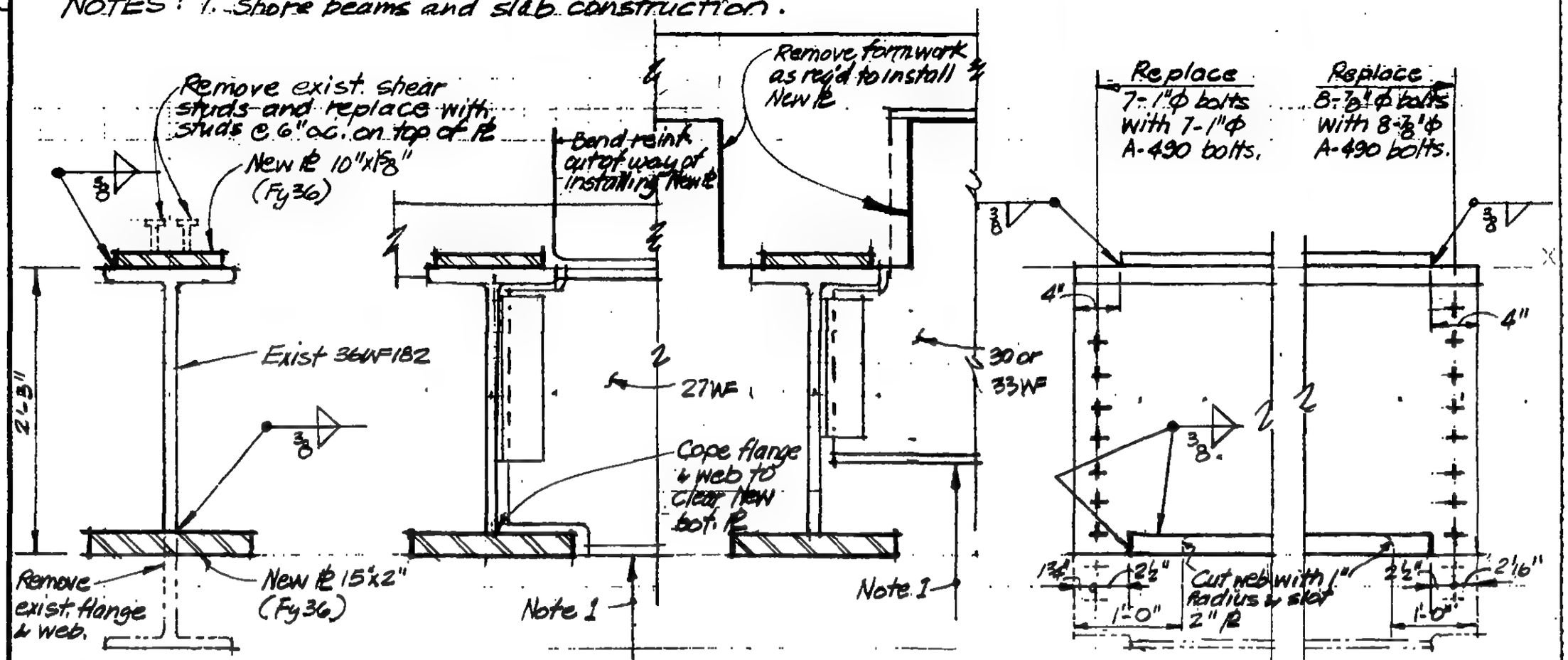

TYPICAL SECTION

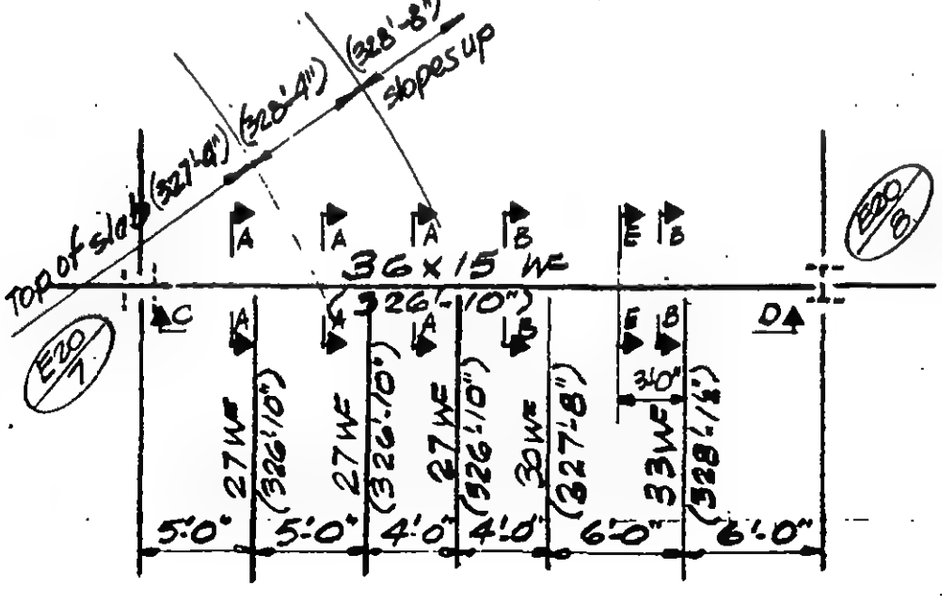

SECTION A-A

SECTION B-B

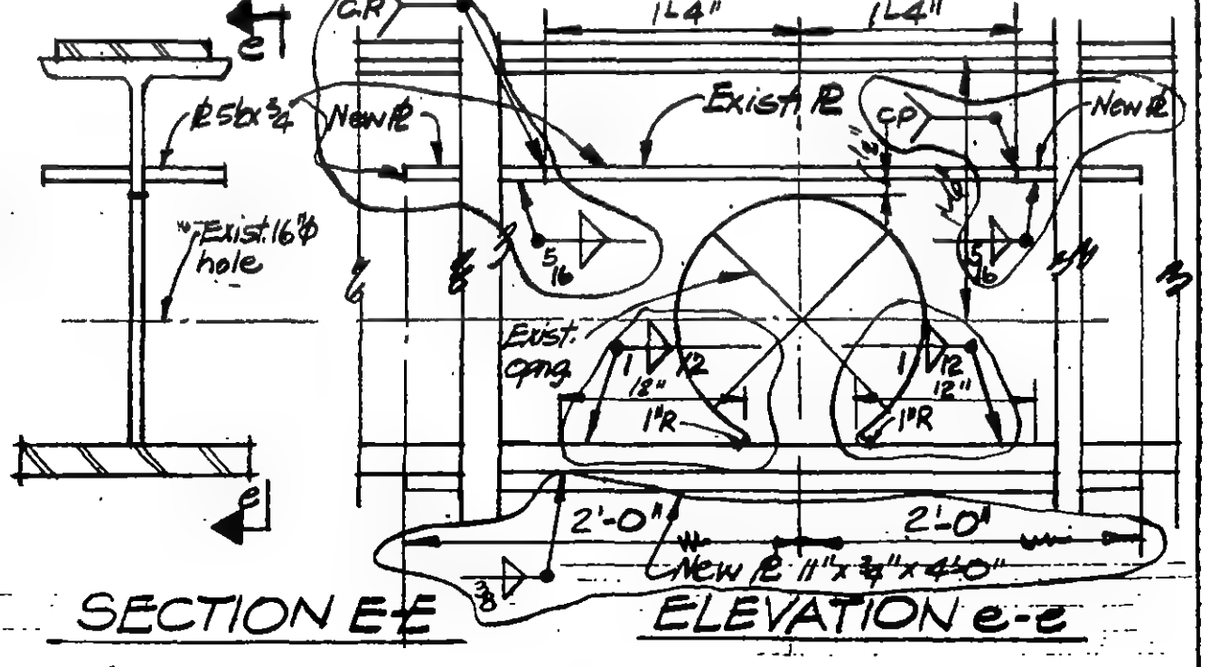

ELEV. C

ELEV. D

SECTION E-E

ELEVATION e-e

LICENSED PROFESSIONAL ENGINEER — LESLIE E. ROBERTSON — No. 34360 — UNIVERSITY OF THE STATE OF NEW YORK

DESIGNED WAB

DRAWN P. Cerbi

REVIEWED

19-E-2002

SKILLING, HELLE, CHRISTIANSEN, ROBERTSON — Structural & Civil Engineers

PROJECT: THE WORLD TRADE CENTER | TITLE: NORTHEAST BUILDING - FIELD REPAIRS | DATE: 3-19-71

REVISIONS
4/10/72
5/24/72

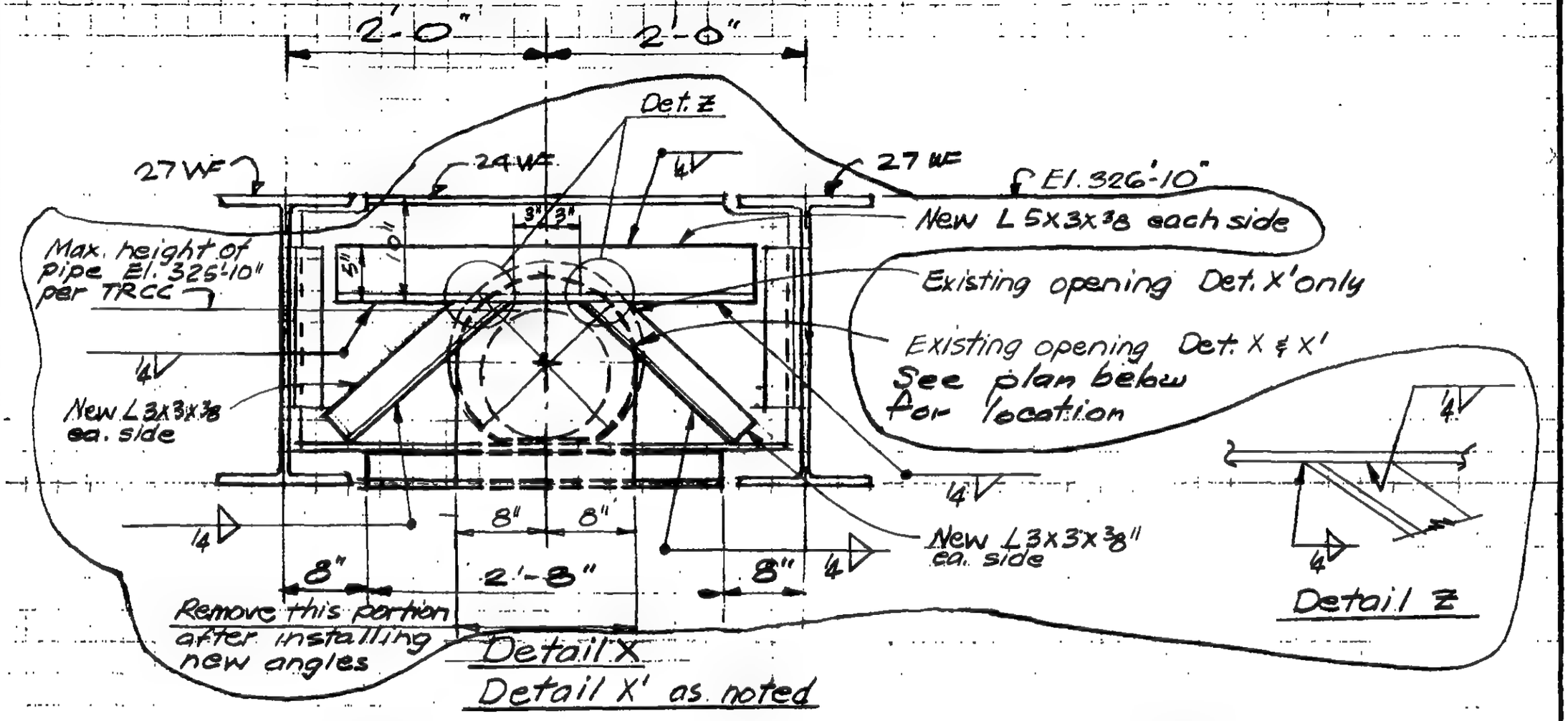

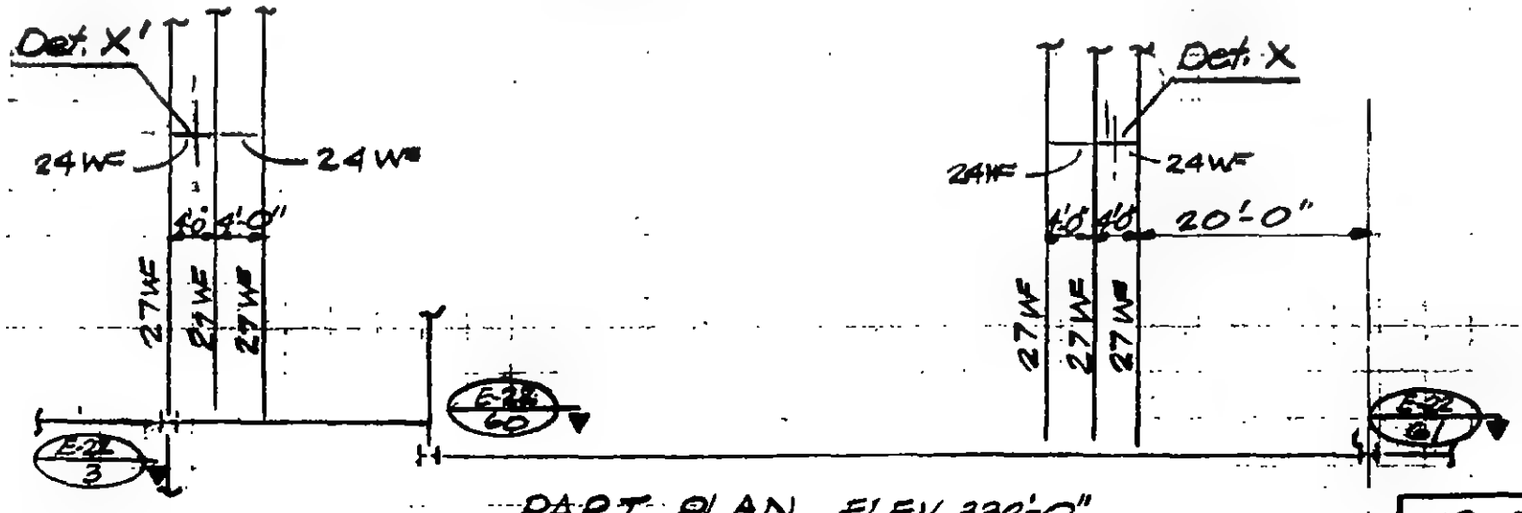

North

PART PLAN ELEV. 332'-0"

LICENSED PROFESSIONAL ENGINEER — LESLIE E. ROBERTSON — No. 34360 — UNIVERSITY OF THE STATE OF NEW YORK

DESIGNED

DRAWN

REVIEWED

19-E-2003

SKILLING, HELLE, CHRISTIANSEN, ROBERTSON — Structural & Civil Engineers

PROJECT: NTC-NORTHEAST PLAZA BLDG. | TITLE: TEMPORARY OPENING | DATE: 6/30/71

REVISIONS: 7/9/71

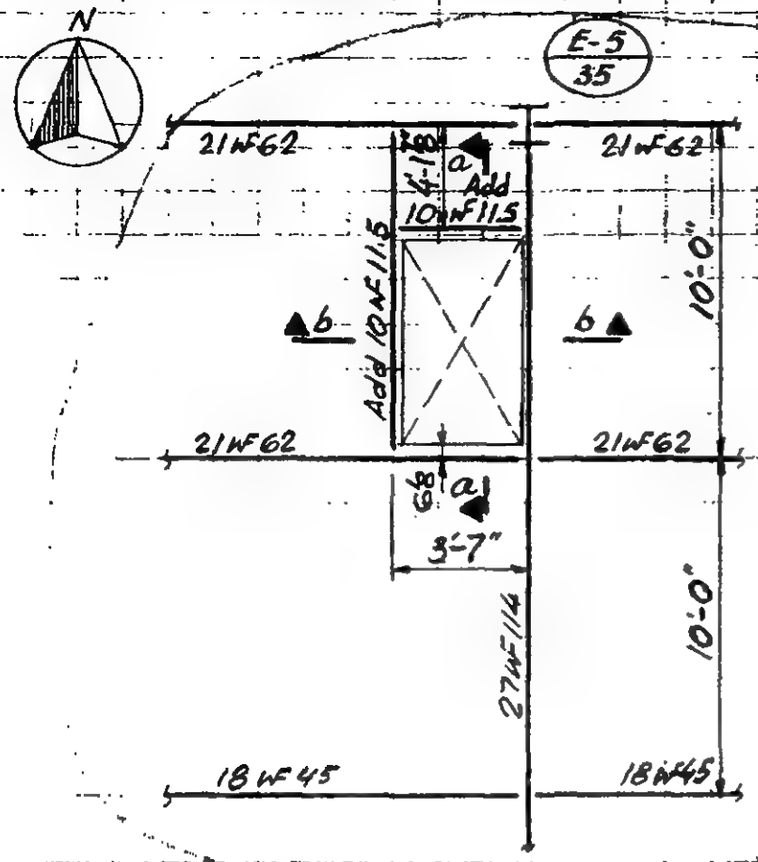

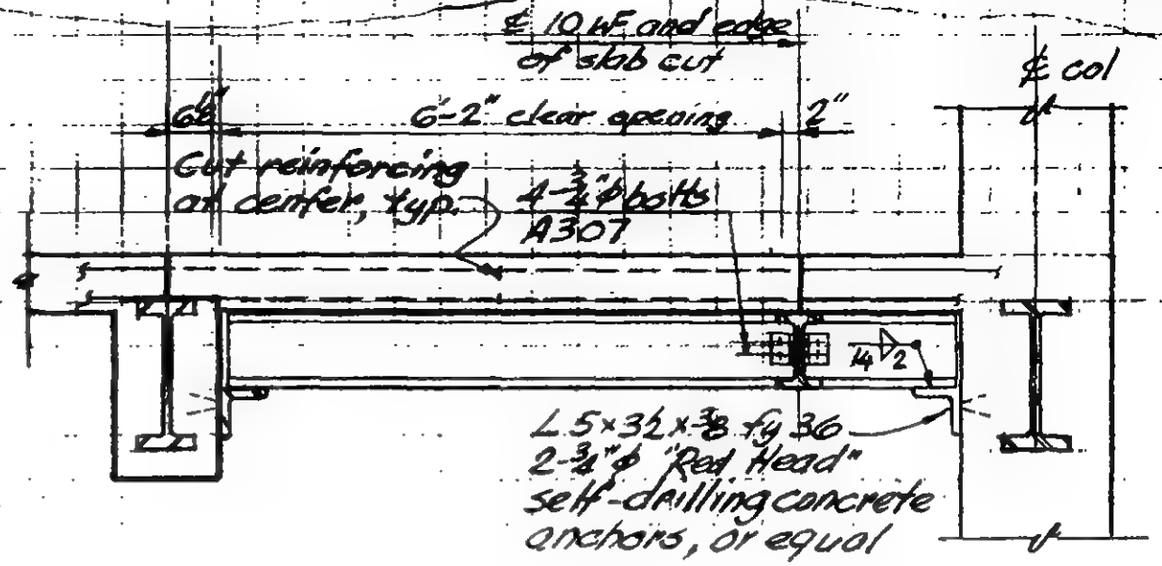

Section a-a

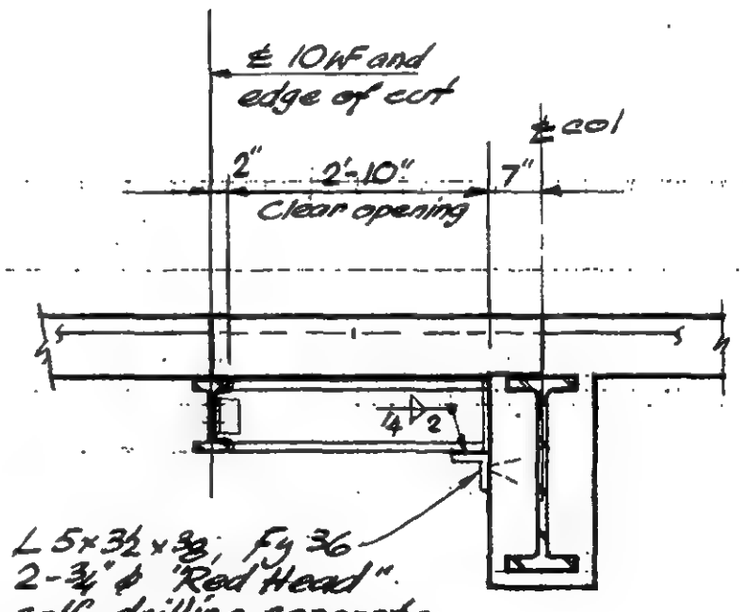

Section b-b

NOTES:

1. Attach seat angles and erect new support beams not more than 1" below the existing slab soffit
2. Drive metal shims not more than 6" on center to obtain uniform bearing between slab and new support beams.
3. Cut temporary slab opening to dimensions shown. Retain as dowels all reinforcing passing through the opening by cutting the reinforcing bars at the center of the opening and bending the bars 90° to lie parallel with the new support beams.
4. To close the opening in the future, bend out all reinforcing, add #4@12x3'-0" T&B in the (E-W) direction, and cast a 6" slab supported on 10WF (and 27 WF) flanges.

LICENSED PROFESSIONAL ENGINEER — LESLIE E. ROBERTSON — No. 34360 — UNIVERSITY OF THE STATE OF NEW YORK

DESIGNED

DRAWN

REVIEWED

19-E-2004

SKILLING, HELLE, CHRISTIANSEN, ROBERTSON — Structural & Civil Engineers

PROJECT: THE WORLD TRADE CENTER | TITLE: TEMPORARY SUPPORT FOR PIPING | DATE: 7-2-71

REVISIONS

Rev for Lapelle trusses 10-28-71

11-10-71

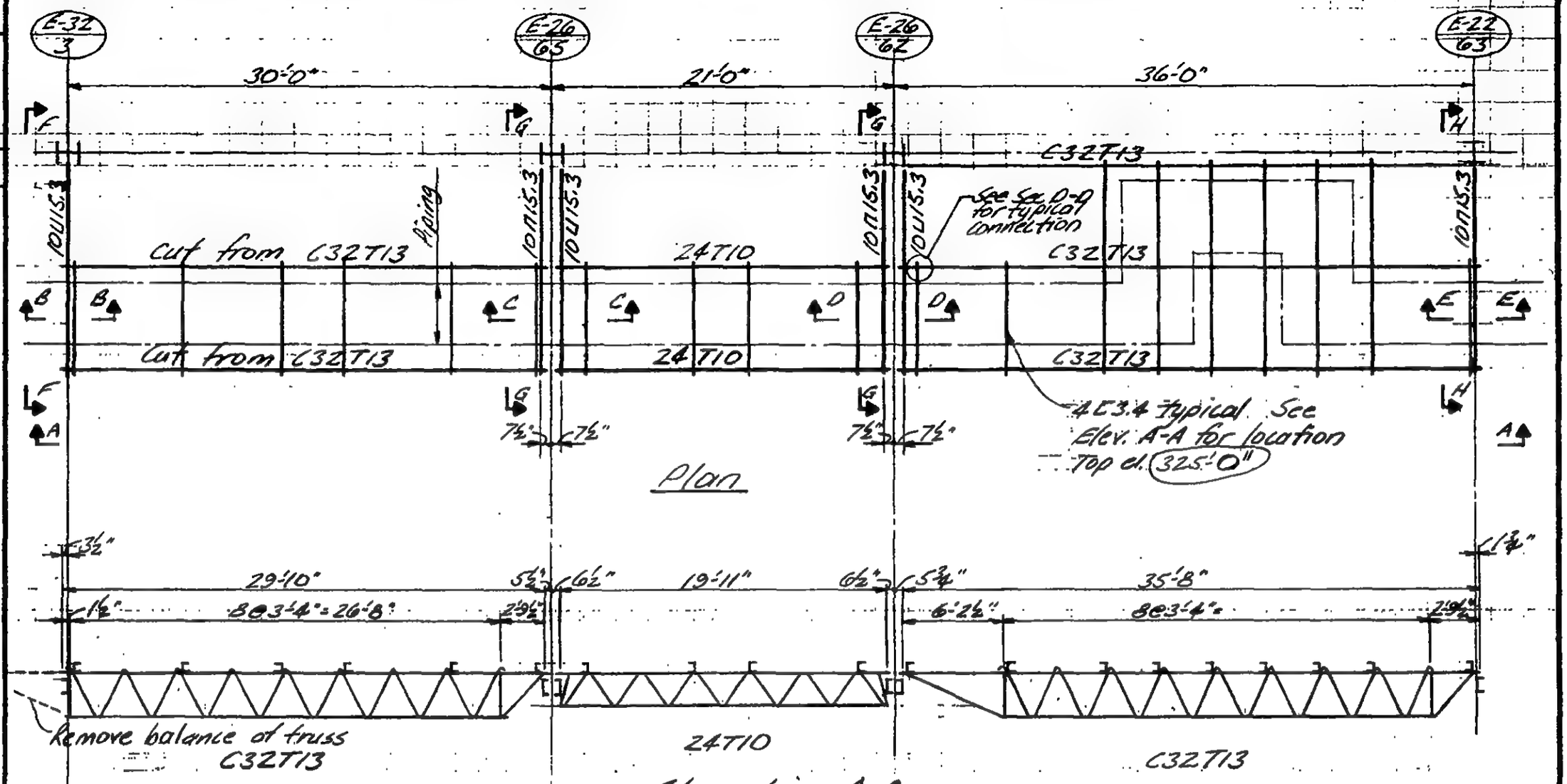

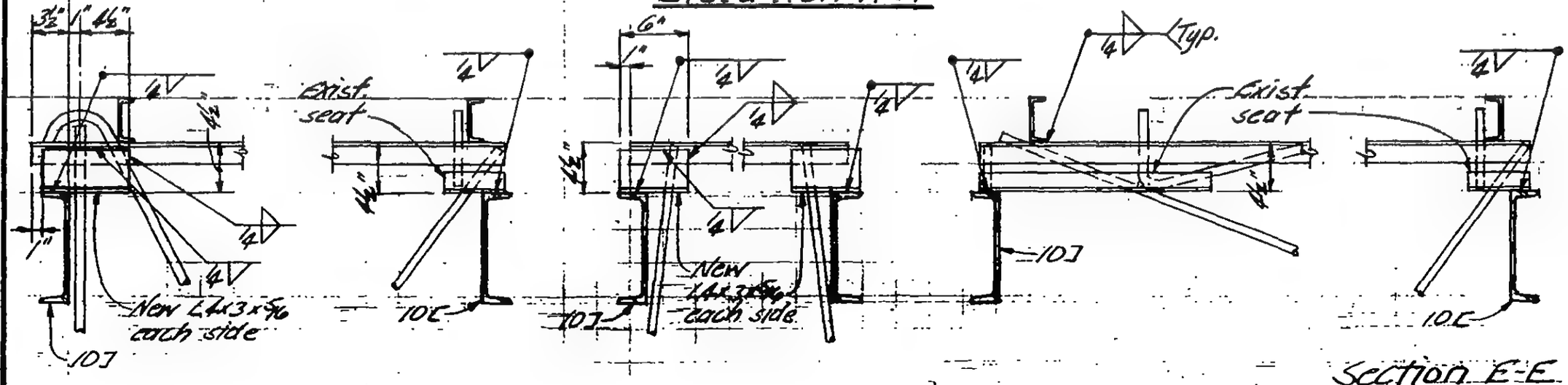

See 19-E-2005.3 for Notes

19-E-2005.1

LICENSED PROFESSIONAL ENGINEER — LESLIE E. ROBERTSON — No. 34360 — UNIVERSITY OF THE STATE OF NEW YORK

DESIGNED

DRAWN

REVIEWED

SKILLING, HELLE, CHRISTIANSEN, ROBERTSON — Structural & Civil Engineers

PROJECT: THE WORLD TRADE CENTER | TITLE: TEMPORARY SUPPORT FOR PIPING | DATE: 7/2/71

REVISIONS

Rev. for Laclede trusses 10/28/71

11/10/71

12/20/71

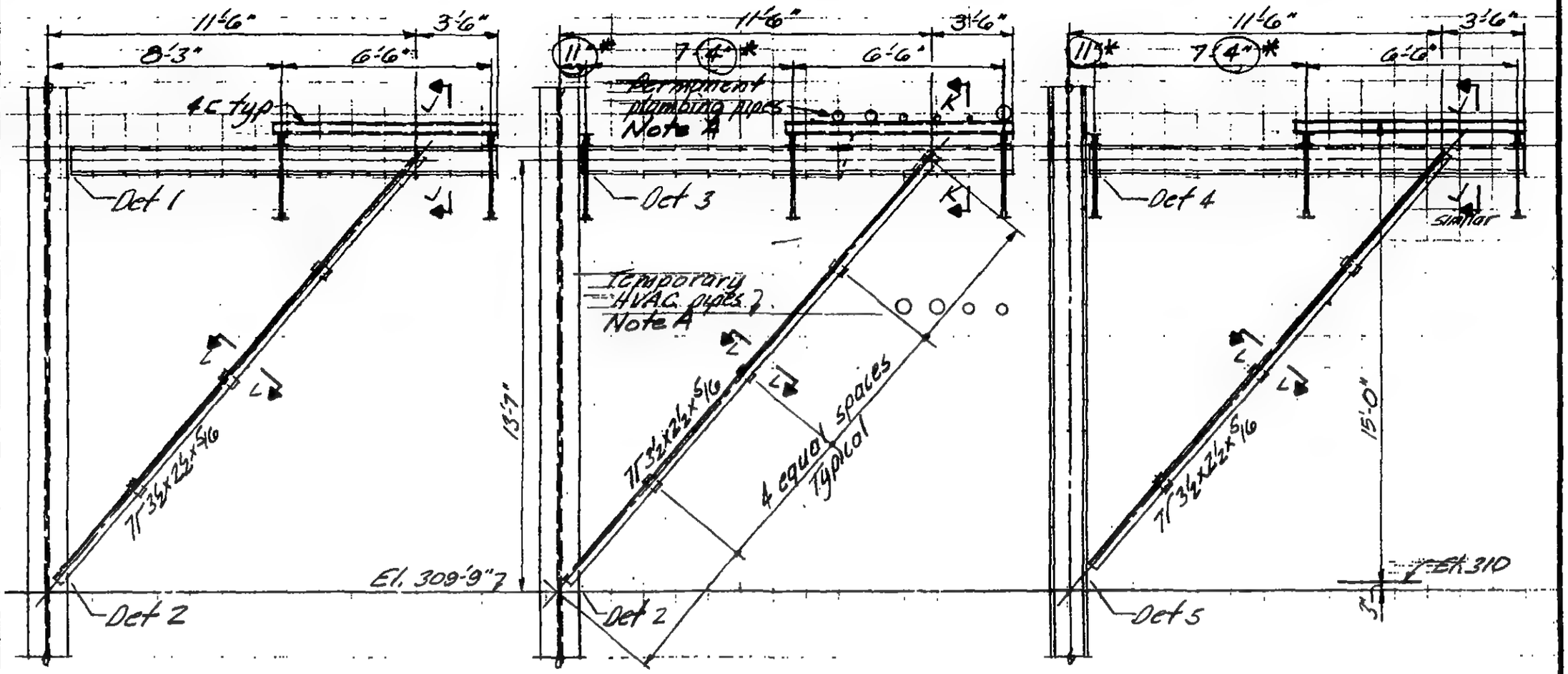

Section F-F

Section G-G

Section H-H

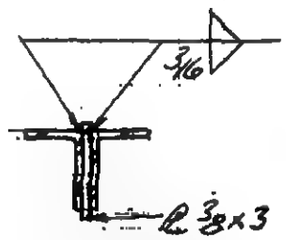

Section L-L

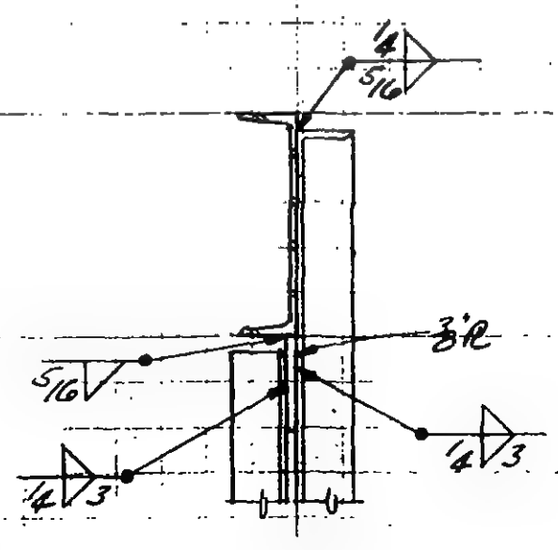

Section J-J

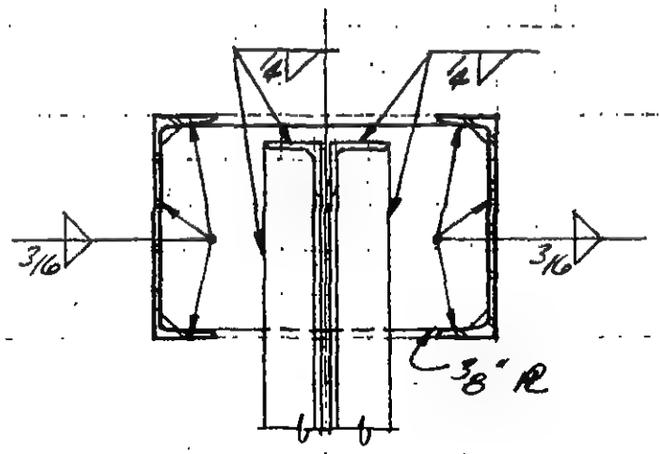

Section K-K

Note A:
stagger supports for pipe to approximately equalize loading on 4C. Submit proposed support points for approval.

* dimensions as measured in field

See 19-E-2005.3 for Notes

19-E-2005.2

LICENSED PROFESSIONAL ENGINEER LESLIE E. ROBERTSON No. 34360 UNIVERSITY OF THE STATE OF NEW YORK

DESIGNED

DRAWN

REVIEWED

SKILLING, HELLE, CHRISTIANSEN, ROBERTSON — Structural & Civil Engineers

PROJECT: THE WORLD TRADE CENTER | TITLE: TEMPORARY SUPPORT FOR PIPING | DATE: 7/2/71

REVISIONS

Rev. for Ladede trusses 10/28/71

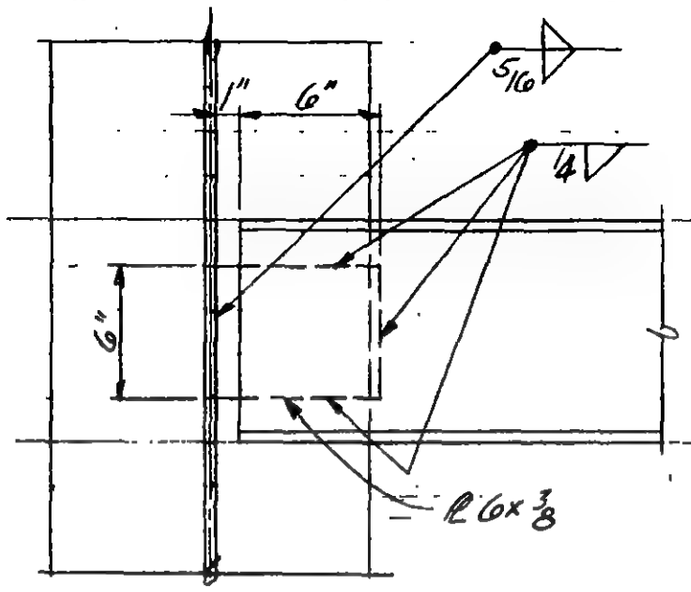

Detail 1

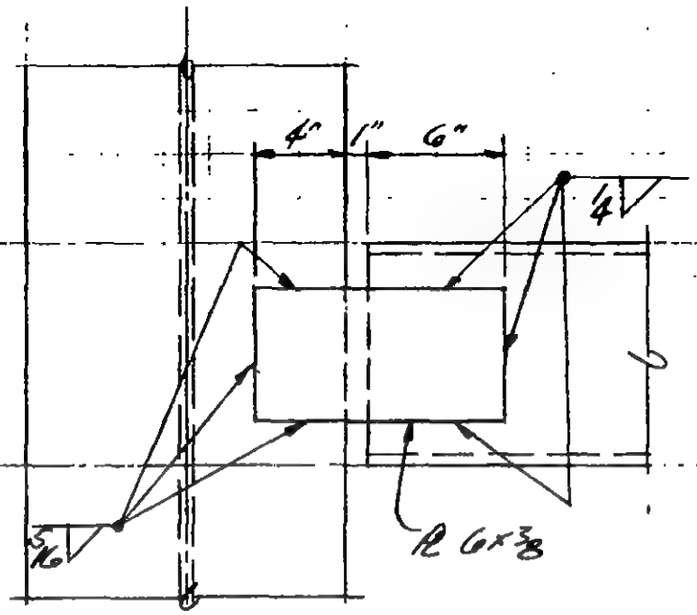

Detail 3

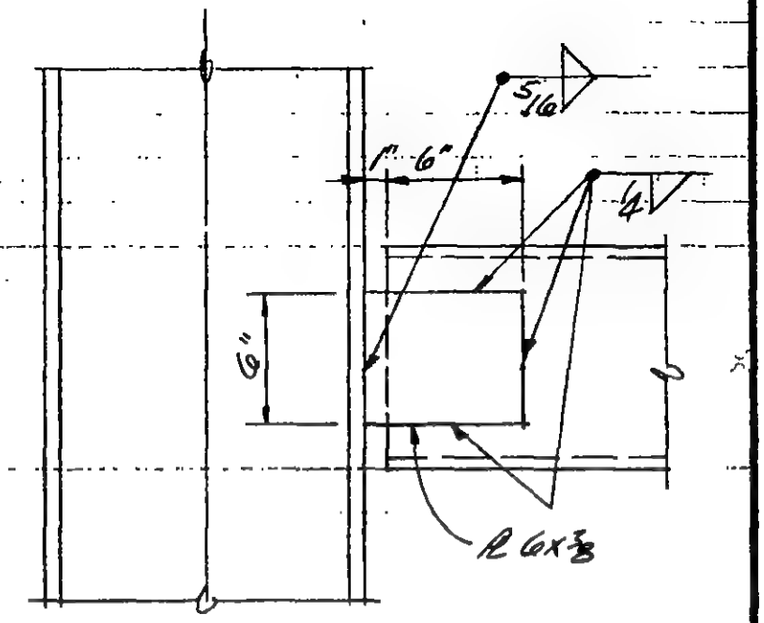

Detail 4

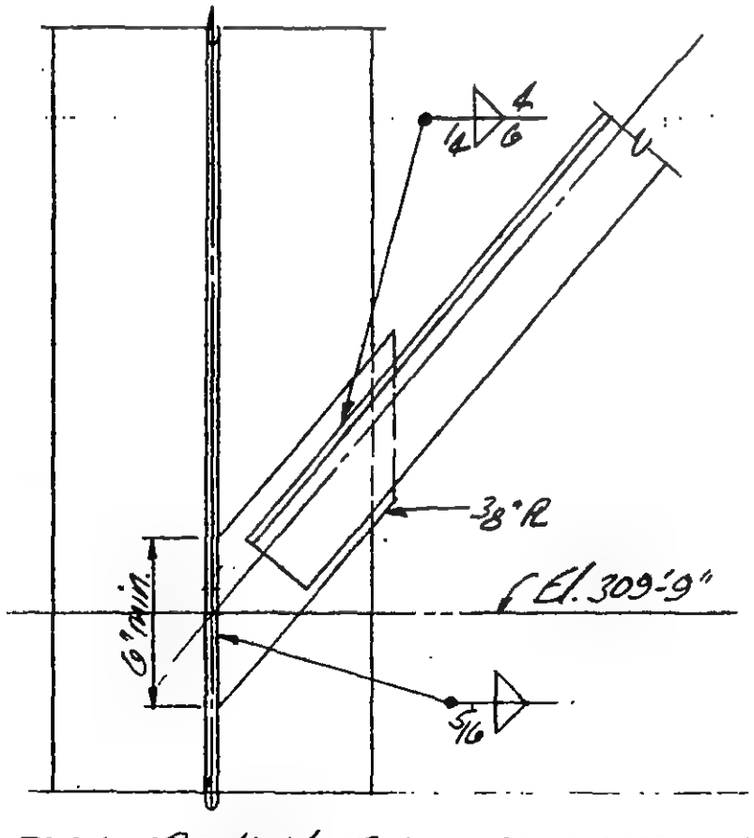

Detail 2

Notes:

1. Trusses indicated C32T13 & 24T10 shall be Ladede surplus trusses now stored at RKE-Carteret plant.
2. All new steel shall be ASTM-A36.
3. All welds shall be made using E70XX low hydrogen electrodes.

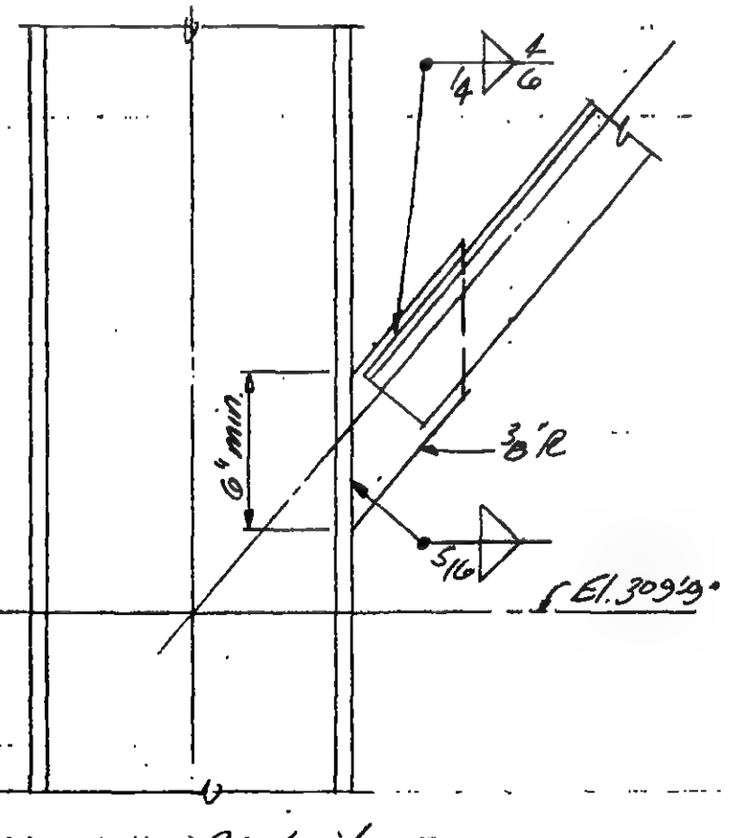

Detail 5

LICENSED PROFESSIONAL ENGINEER — LESLIE E. ROBERTSON — No. 34360 — UNIVERSITY OF THE STATE OF NEW YORK

DESIGNED

DRAWN

REVIEWED

19-E-2005.3

SKILLING, HELLE, CHRISTIANSEN, ROBERTSON — Structural & Civil Engineers

PROJECT: THE WORLD TRADE CENTER | TITLE: REPAIR AT FL 10 SOUTH - NE BLDG | DATE: 7/2/71

REVISIONS
10/29/71
12/9/71

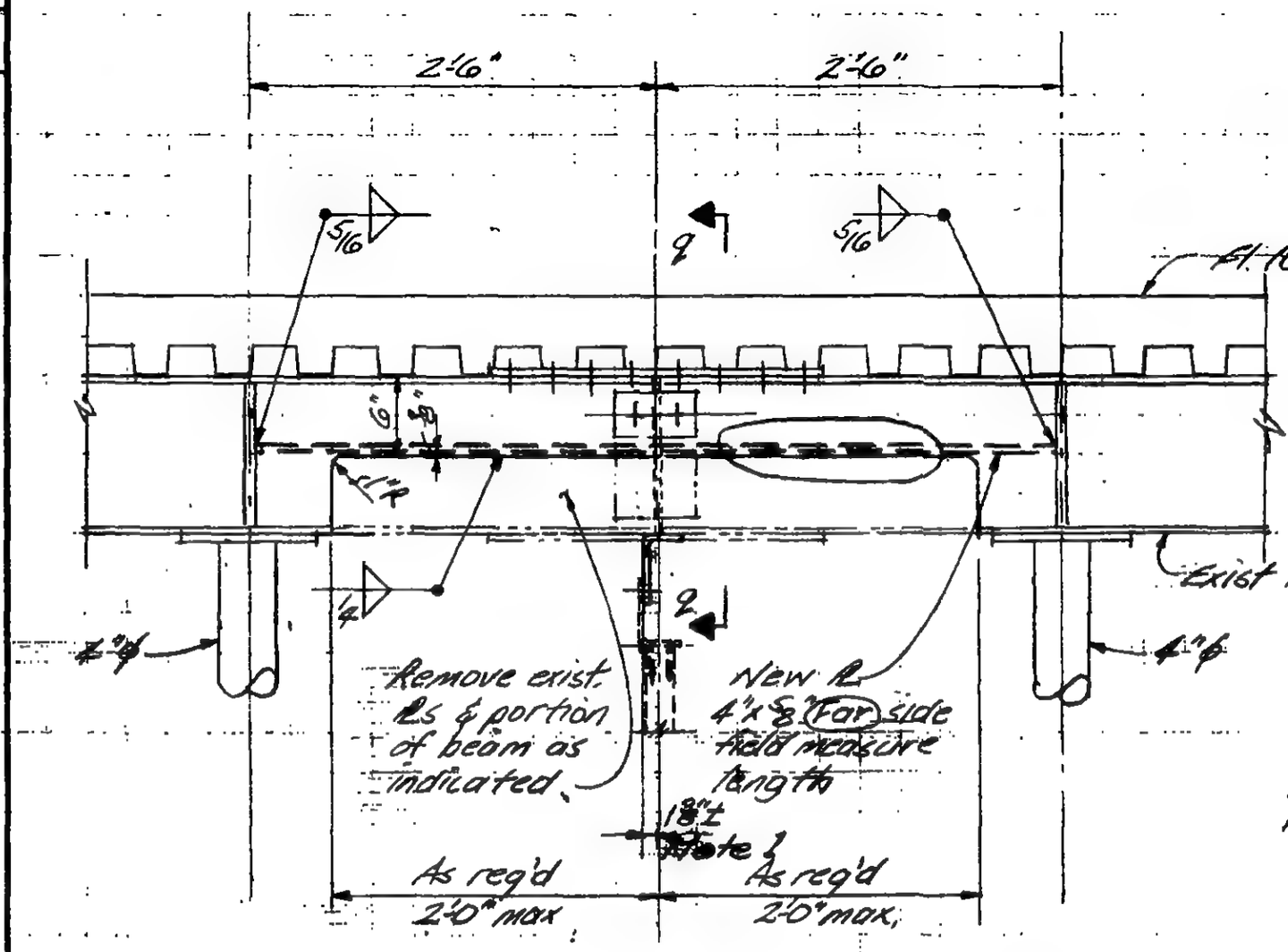

Note 1: See KAWNEER Dwg. No. 2-9151-MW7

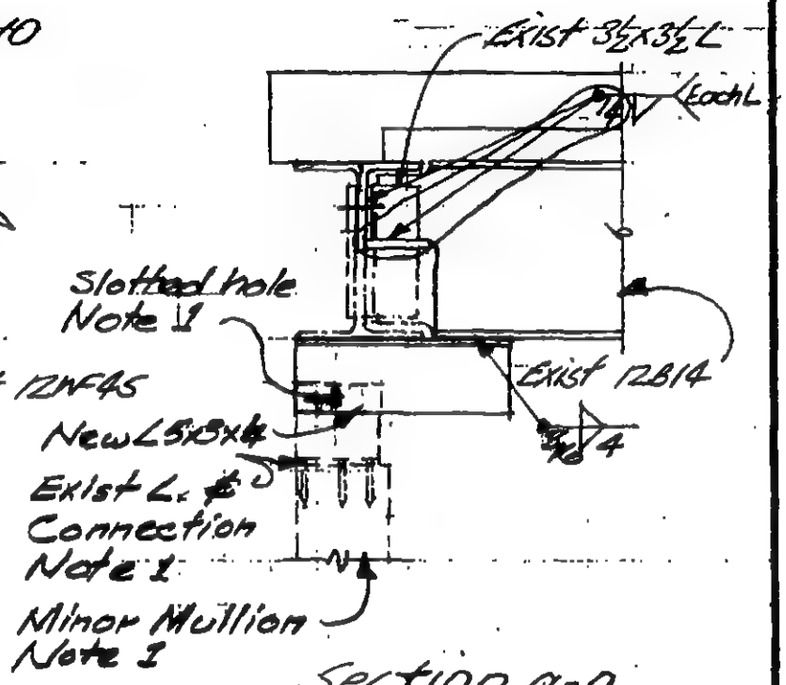

Section q-q

Detail Q

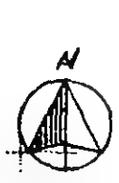

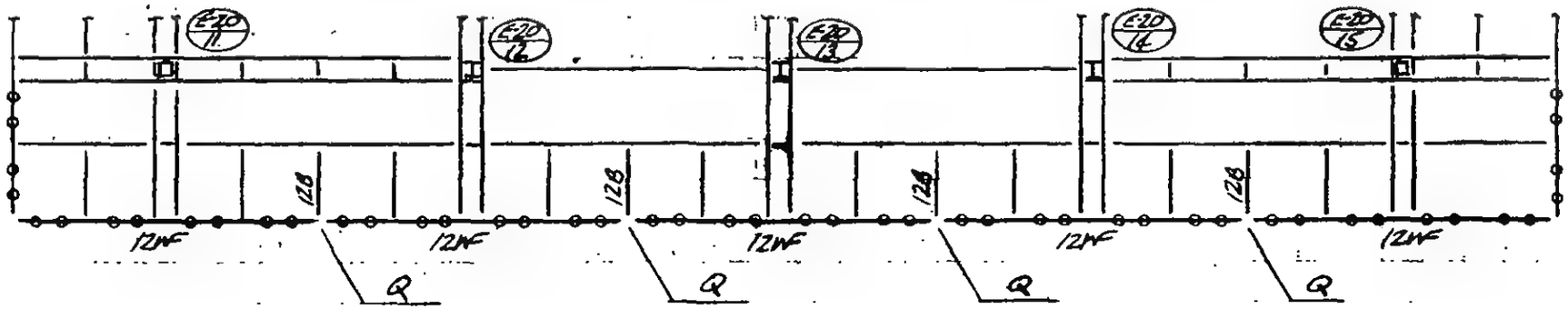

Key Plan

LICENSED PROFESSIONAL ENGINEER — LESLIE E. ROBERTSON — No. 34360 — UNIVERSITY OF THE STATE OF NEW YORK

DESIGNED

DRAWN

REVIEWED

19-E-2006

SKILLING, HELLE, CHRISTIANSEN, ROBERTSON — Structural & Civil Engineers

PROJECT: THE WORLD TRADE CENTER | TITLE: OPENING THRU BEAM AT EL. 332' | DATE: 7-26-71

REVISIONS
11-1-71

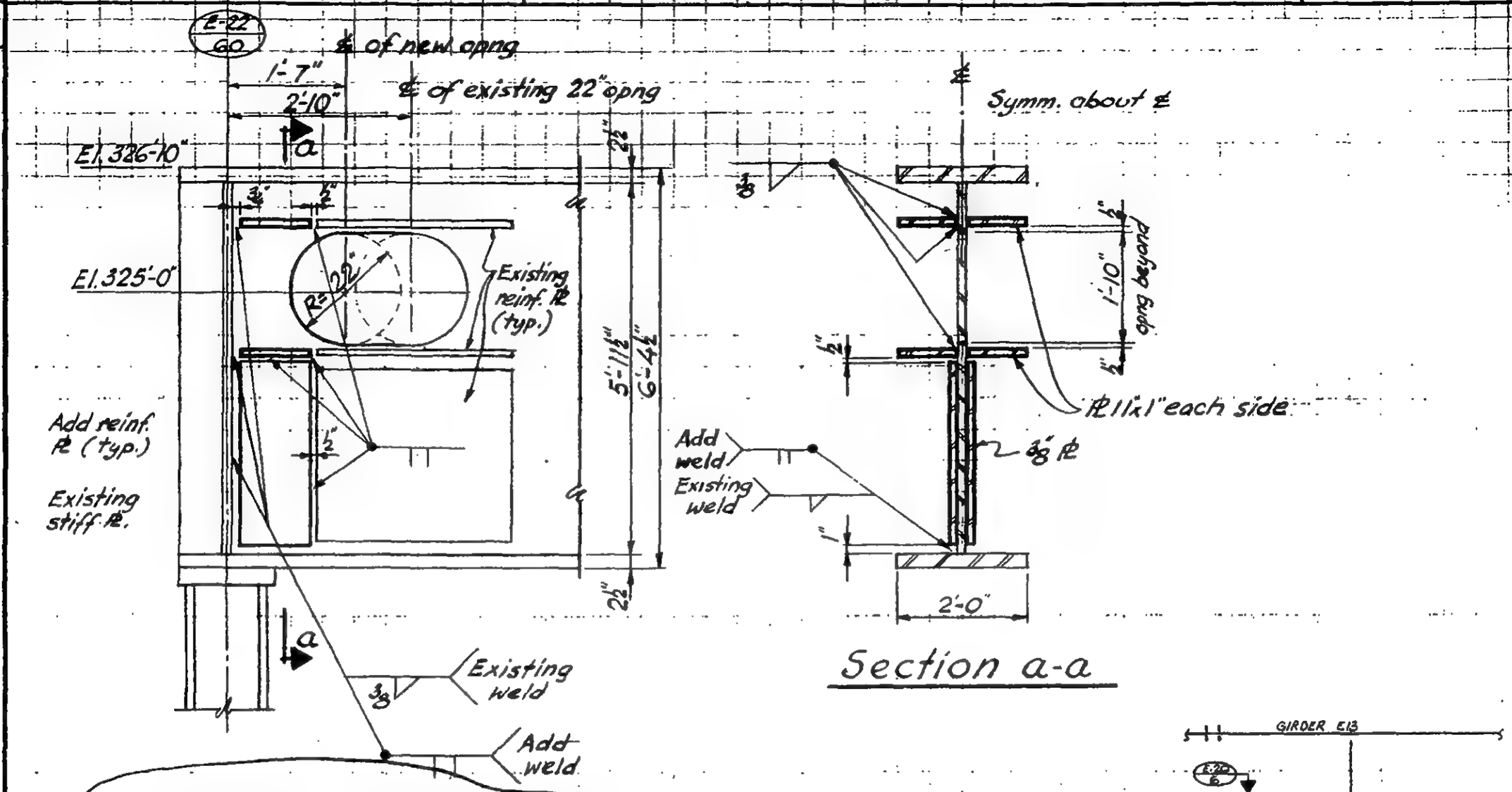

ENLARGED OPENING 2007A

Section a-a

Notes:

1. All new steel to be ASTM-A36.
2. All welds to be make with E70xx low hydrogen electrodes.
3. Complete installation of all new plates before cutting opening.

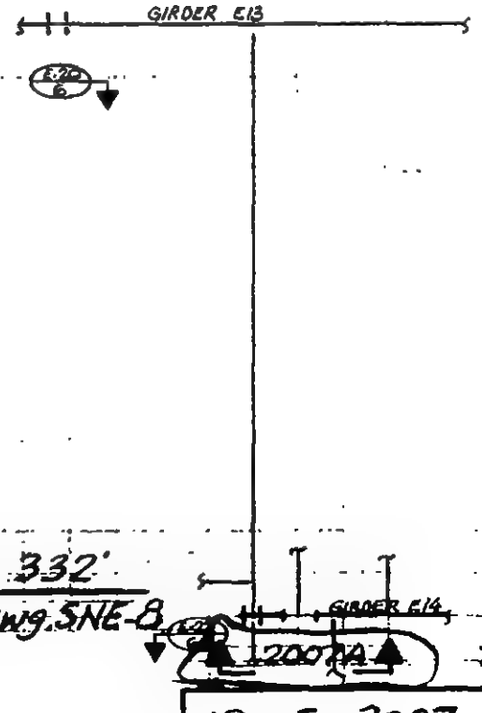

Key Plan El. 332'
NE Bldg. Ref. Dwg. SNE-8

LICENSED PROFESSIONAL ENGINEER
LESLIE E. ROBERTSON
No. 34360
UNIVERSITY OF THE STATE OF NEW YORK

DESIGNED

DRAWN
J. Gricius

REVIEWED

19-E-2007.1

SKILLING, HELLE, CHRISTIANSEN ROBERTSON — Structural & Civil Engineers

PROJECT THE WORLD TRADE CENTER | TITLE ENLARGED OPENING THRU BEAM AT El. 332' | DATE 7-26-71

REVISIONS
11-1-71

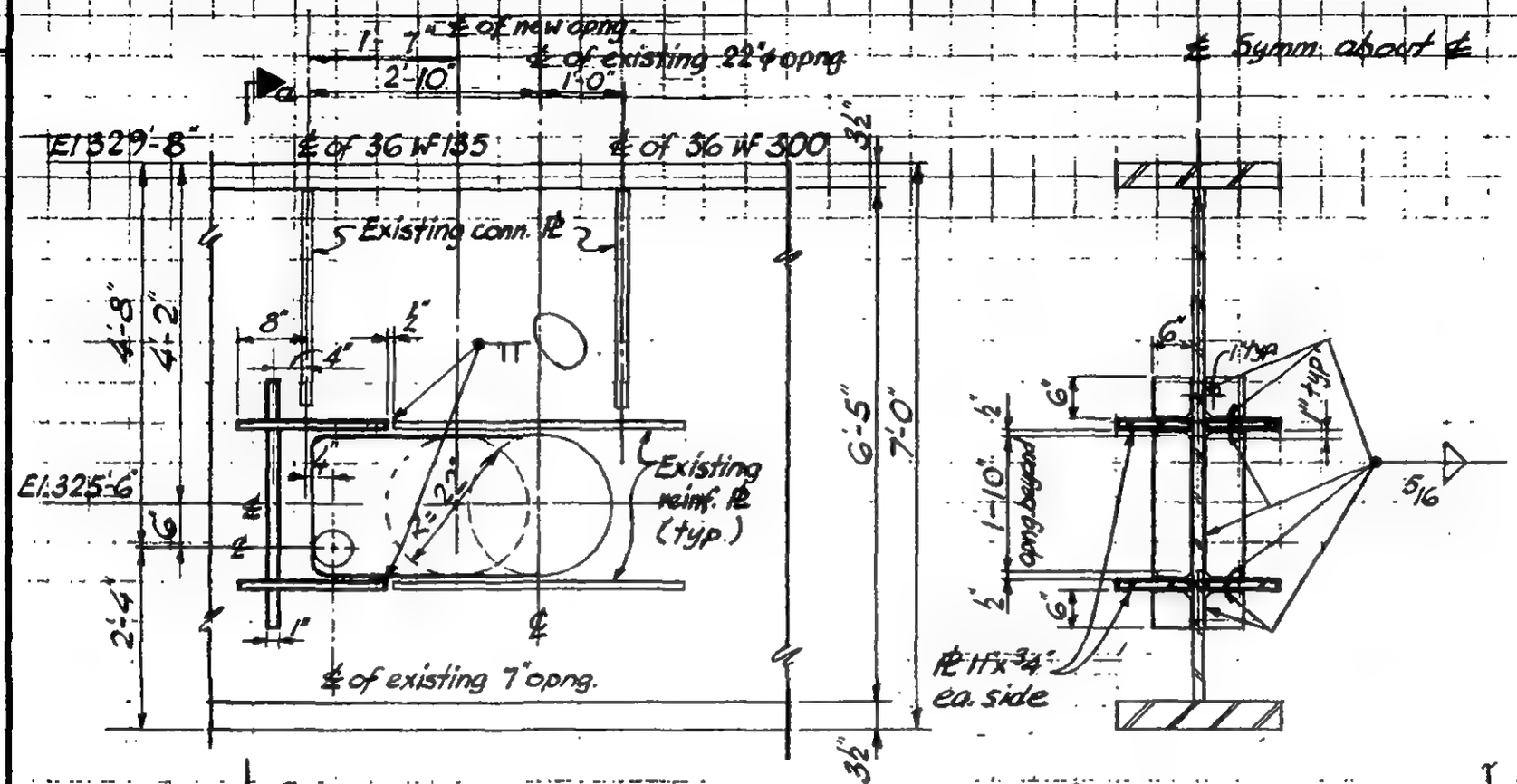

a

Section a-a

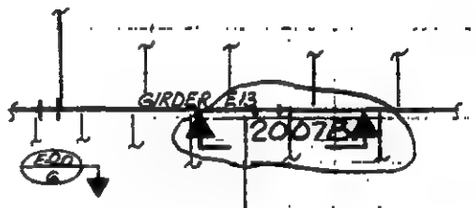

ENLARGED OPENING 2007.B

Notes:

1. All new steel to be ASTM-A36.
2. All welds to be make with E70xx low hydrogen electrodes.
3. Complete installation of all new plates before cutting opening.

Key Plan El. 332'
NE Bldg. Ref. Dwg. SNE-8 (E.D.D. 60)

LICENSED PROFESSIONAL ENGINEER — LESLIE E. ROBERTSON — No 34360 — UNIVERSITY OF THE STATE OF NEW YORK

DESIGNED

DRAWN J. Gricius

REVIEWED

19-E-2007.2

SKILLING, HELLE, CHRISTIANSEN ROBERTSON — Structural & Civil Engineers

PROJECT THE WORLD TRADE CENTER | TITLE OPENING THRU BEAMS AT EL 332'-0" | DATE 7-26-71

REVISIONS

11-1-71

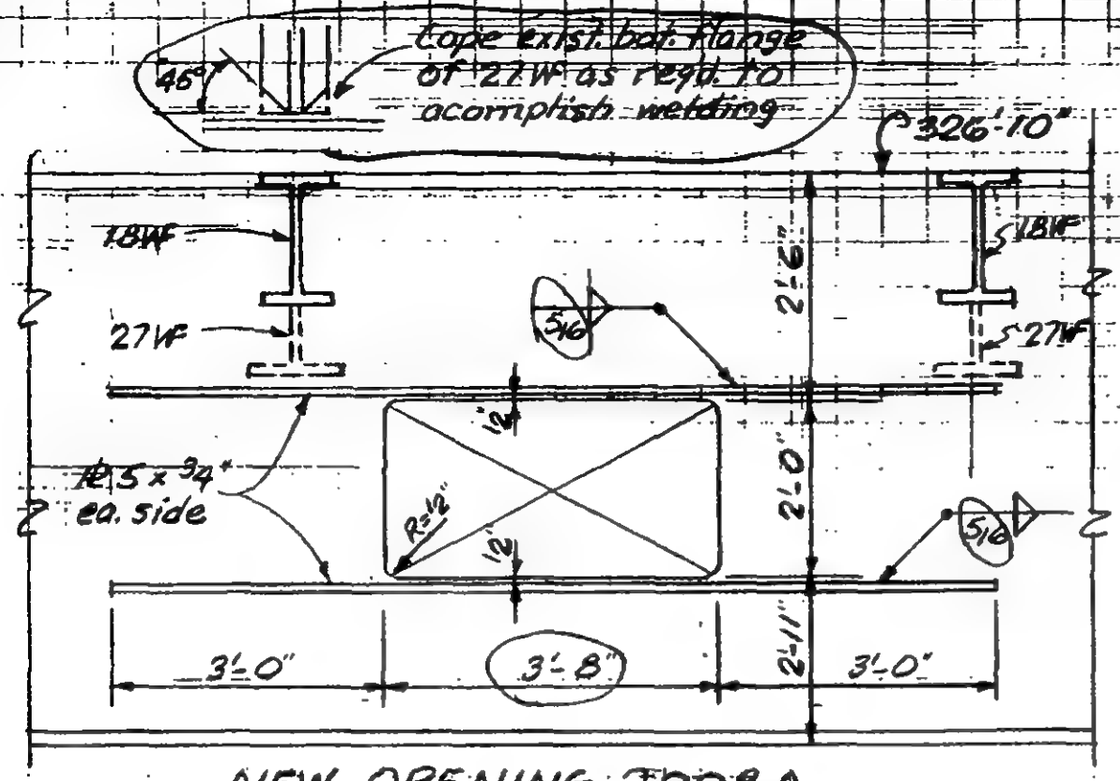

NEW OPENING 2008A

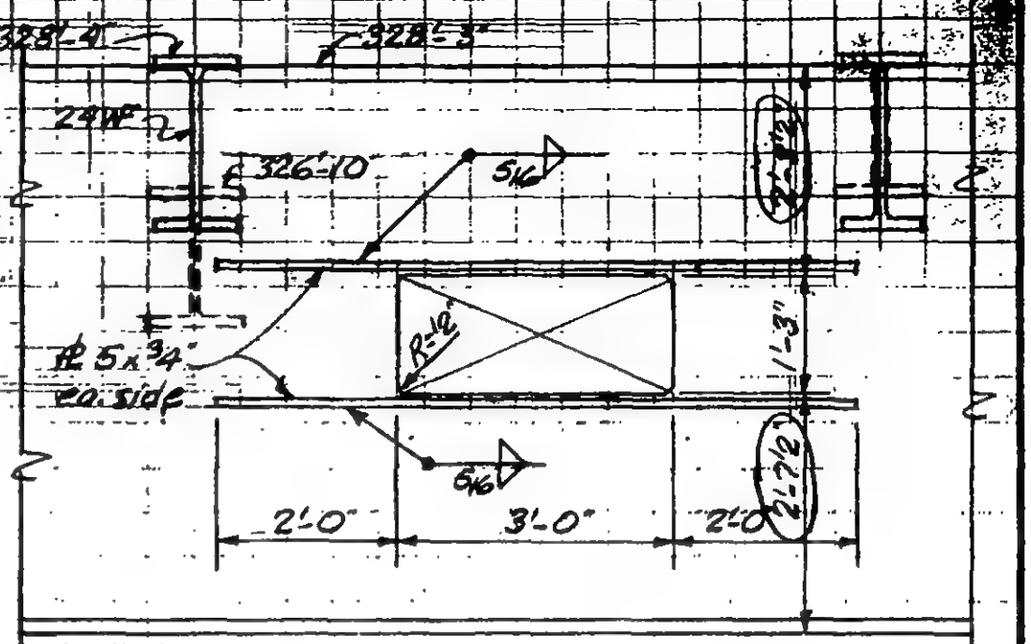

NEW OPENING 2008B

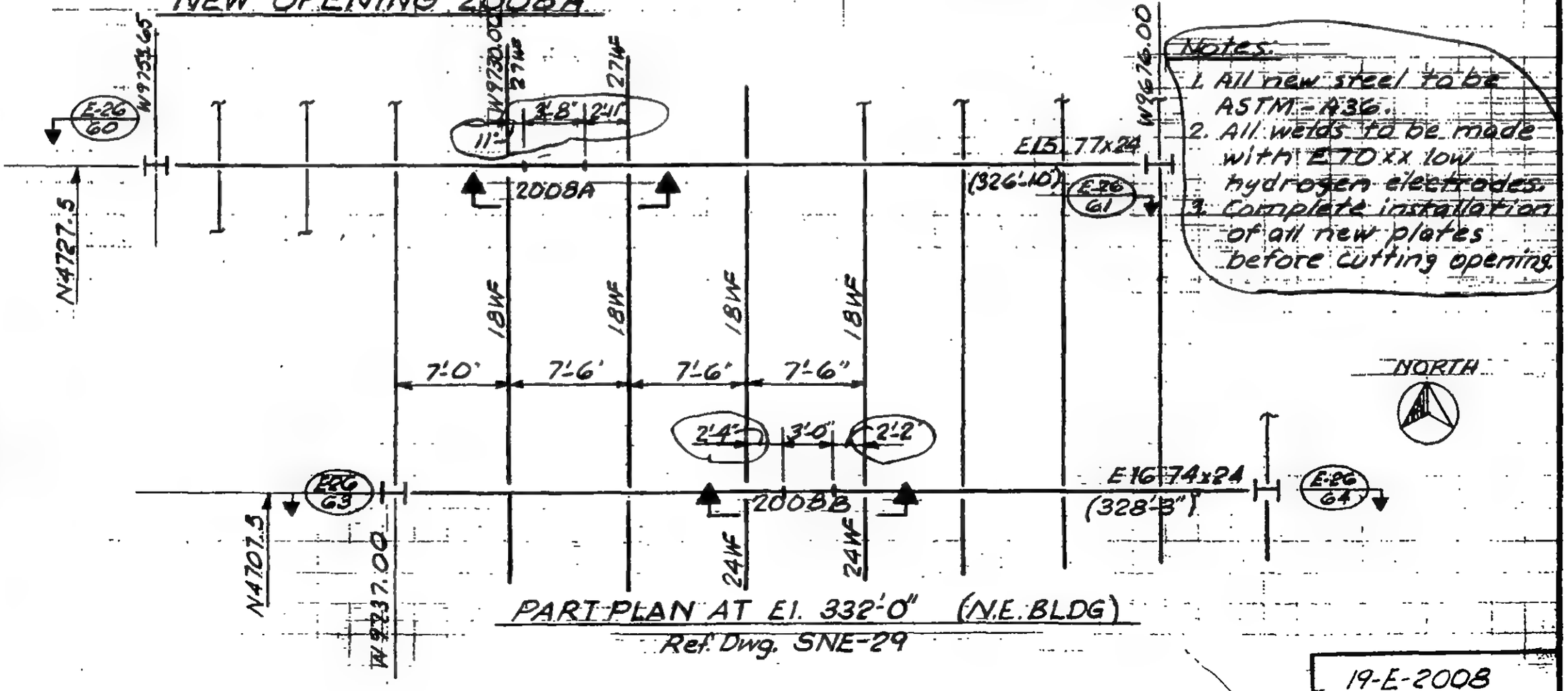

Notes.
1. All new steel to be ASTM-A36.
2. All welds to be made with E70xx low hydrogen electrodes.
3. Complete installation of all new plates before cutting opening.

PART PLAN AT El. 332'-0" (N.E. BLDG)

Ref. Dwg. SNE-29

LICENSED PROFESSIONAL ENGINEER — LESLIE E. ROBERTSON — No. 34360 — UNIVERSITY OF THE STATE OF NEW YORK

DESIGNED

DRAWN D. Chew

REVIEWED

19-E-2008

SKILLING, HELLE, CHRISTIANSEN, ROBERTSON — Structural & Civil Engineers

PROJECT: THE WORLD TRADE CENTER | TITLE: OPENING THRU BEAMS AT El. 332'-0" | DATE: 7-26-71

REVISIONS
11-1-71

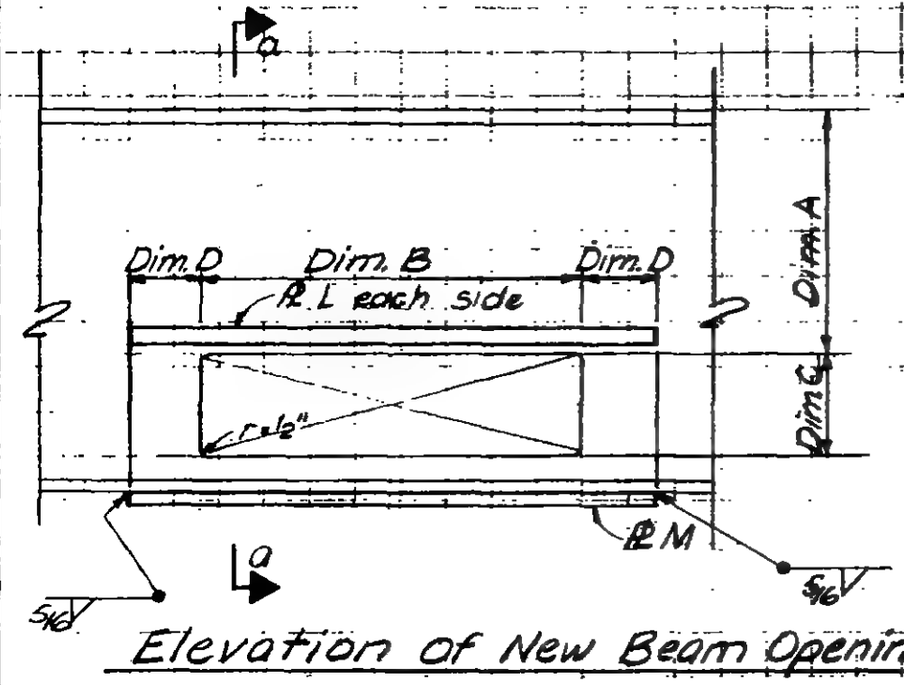

Elevation of New Beam Opening

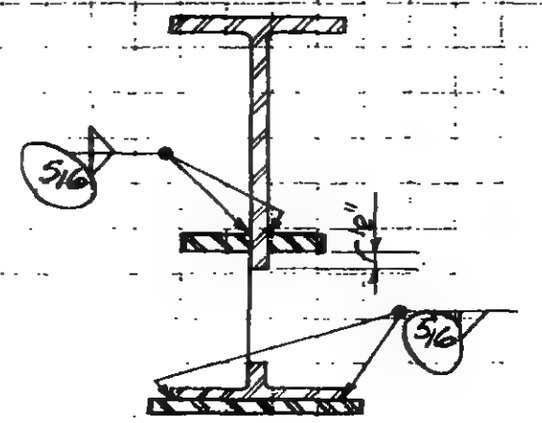

Section a-a

SCHEDULE						
Beam opng	PL		Dim.			
	L	M	A	B	C	D
2009A	5"x3/4"	13"x5/8"	1'-3"	2'-8"	1'-0"	2'-0"
2009B	*	13"x5/8"	1'-3"	2'-4"	1'-6"	2'-0"
2009C	5"x3/4"	13"x5/8"	1'-7"	2'-4"	1'-2"	*
2009D	5"x3/4"	13"x5/8"	1'-9 1/2"	2'-10"	0'-9"	2'-0"
2009E	5"x3/4"	13"x5/8"	1'-5"	3'-7"	0'-10"	2'-0"

* 2'-0" Plate L South side
1'-0 Plate L North side
2'-0" Plate M

Notes:
1. All new steel to be ASTM-A36.
2. All welds to be made with E70xx low hydrogen electrodes.
3. Complete installation of all new plates before cutting opening.

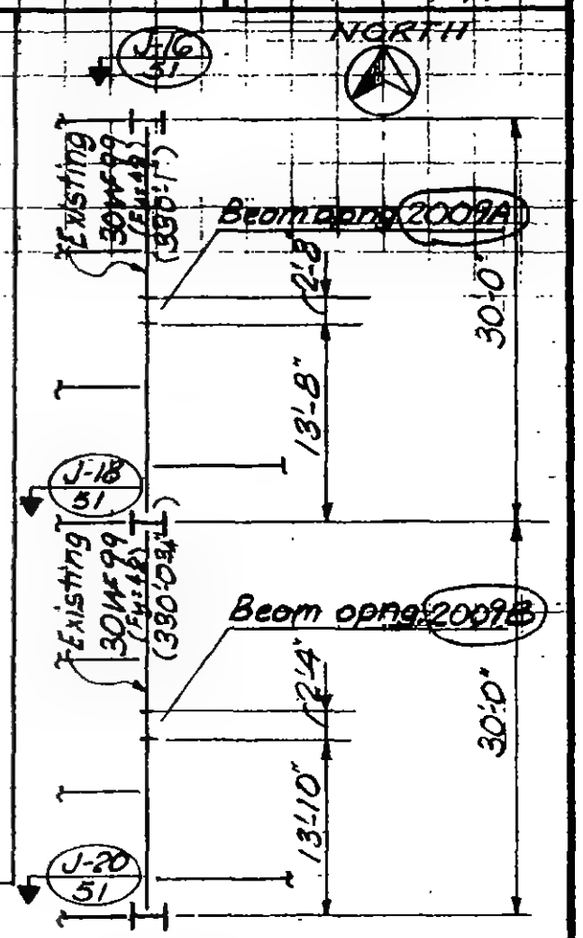

PART PLAN El. 332'-0" (Zone J-G)
(Ref. Dwg. SJ-103)

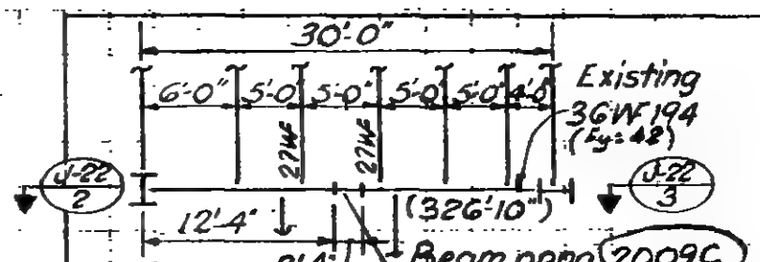

PART PLAN El. 332'-0" - SW (NE BLDG.)

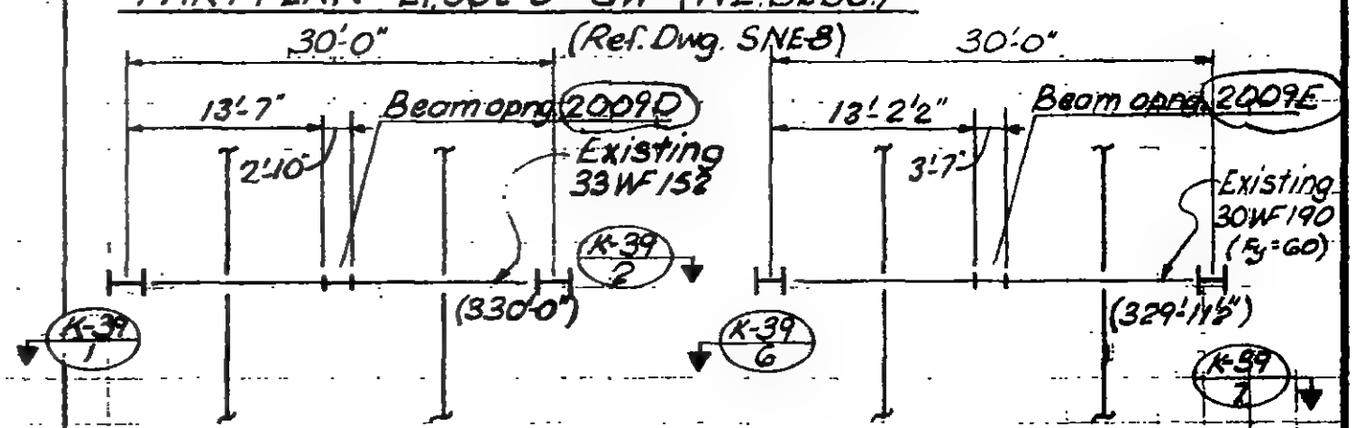

PART PLAN El. 332'-0" (Zone K-Z)
(Ref. Dwg. SK-105)

19-E-2009

LICENSED PROFESSIONAL ENGINEER — LESLIE E. ROBERTSON — No. 34960 — UNIVERSITY OF THE STATE OF NEW YORK

SIGNED: CHIANG
DRAWN: T. R.
REVIEWED:

SKILLING, HELLE, CHRISTIANSEN, ROBERTSON — Structural & Civil Engineers

PROJECT: THE WORLD TRADE CENTER | TITLE: BEAM OPENINGS AT ELEVATION 332. | DATE: 11-1-71

REVISIONS

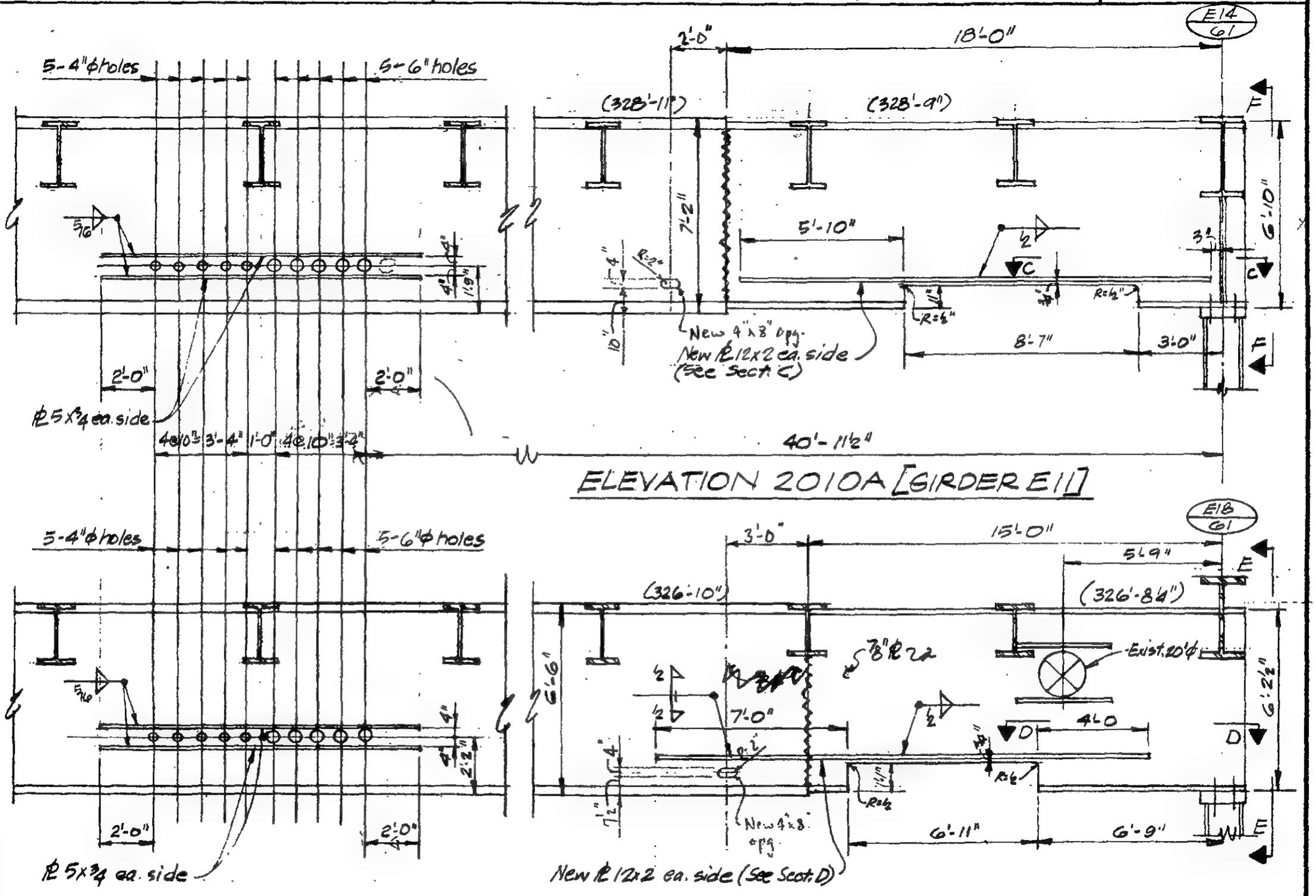

LICENSED PROFESSIONAL ENGINEER — LESLIE E. ROBERTSON — No 34560 — CITY OF THE STATE OF NEW YORK

ENED

DRAWN P. Ordi

REVIEWED

See 19-E-2010.2 for Notes & Key Plan.

19-E-2010.1

SKILLING, HELLE, CHRISTIANSEN, ROBERTSON — Structural & Civil Engineers

PROJECT: THE WORLD TRADE CENTER | TITLE: BEAM OPENINGS AT ELEVATION 352. | DATE: 11-1-71

REVISIONS

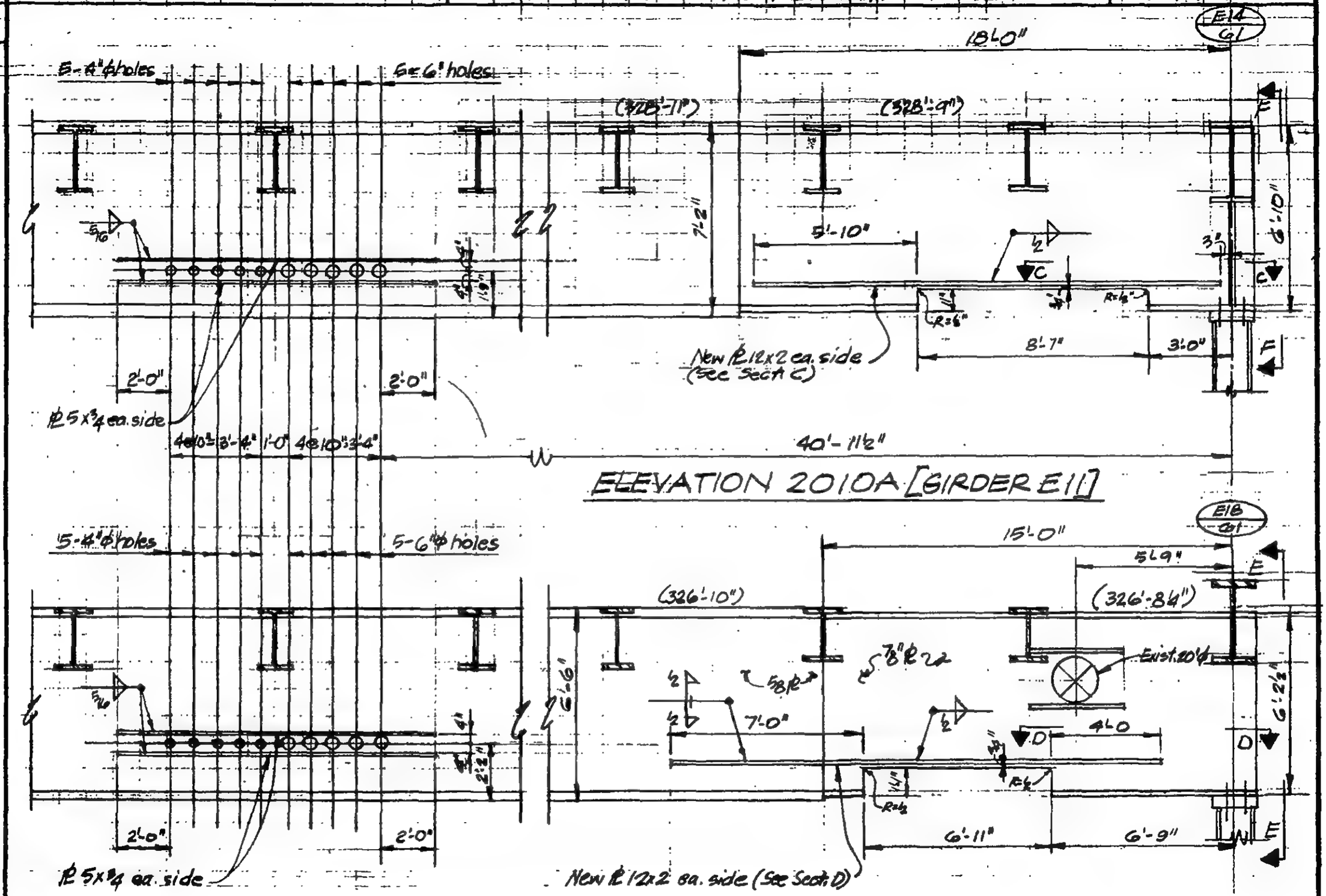

ELEVATION 2010A [GIRDER E11]

ELEVATION 2010B [GIRDER E12]

LICENSED PROFESSIONAL ENGINEER
LESLIE E. ROBERTSON
No 34360
UNIVERSITY OF THE STATE OF NEW YORK

DESIGNED

DRAWN P. Ceda

REVIEWED

See 19-E-2010.2 for Notes & Key Plan.

19-E-2010.1

SKILLING, HELLE, CHRISTIANSEN, ROBERTSON — Structural & Civil Engineers

PROJECT: THE WORLD TRADE CENTER | TITLE: BEAM CRENNGS AT ELEVATIONS 332 | DATE: 11-1-71

REVISIONS

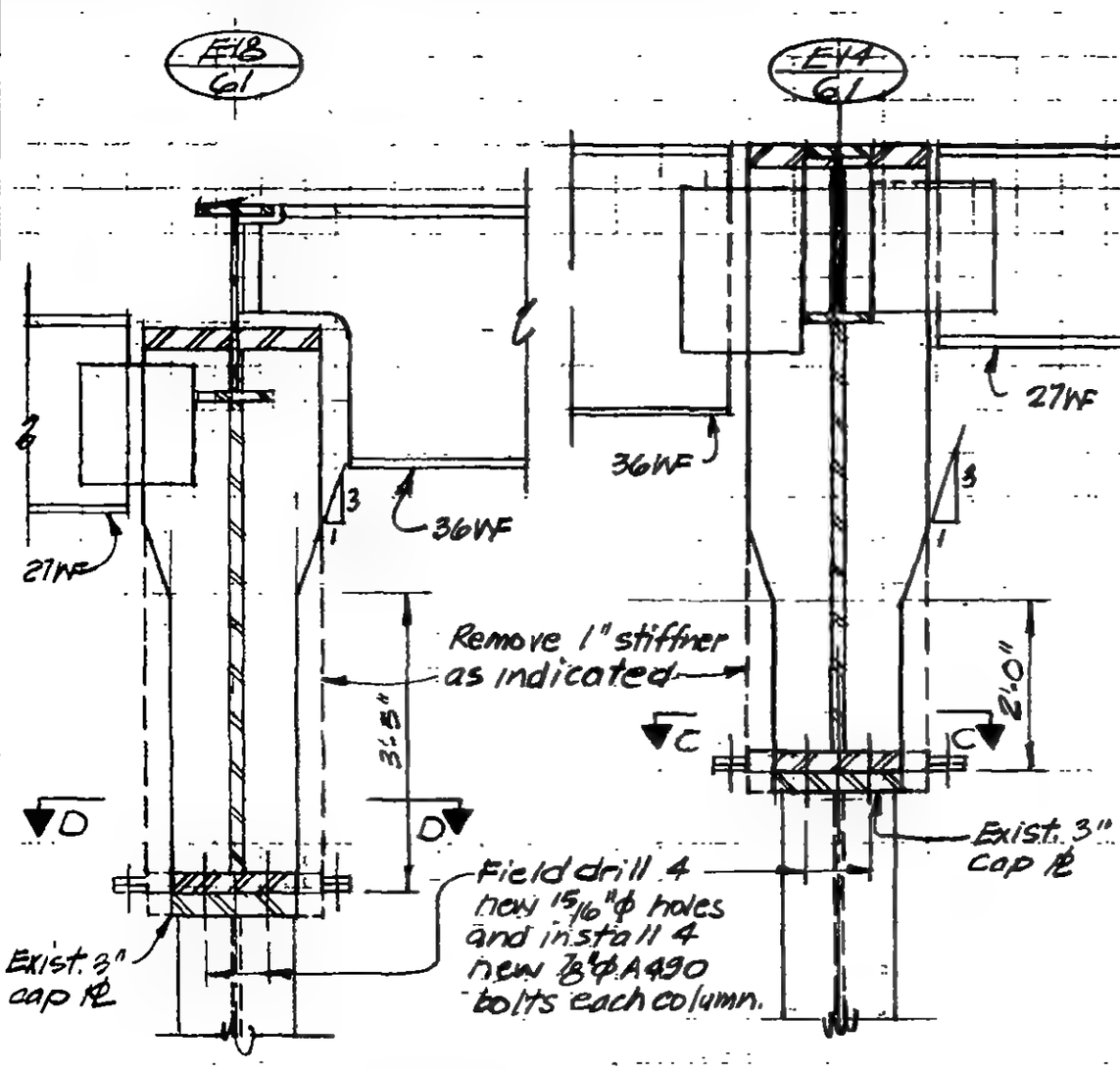

Section 2010E Section 2010F

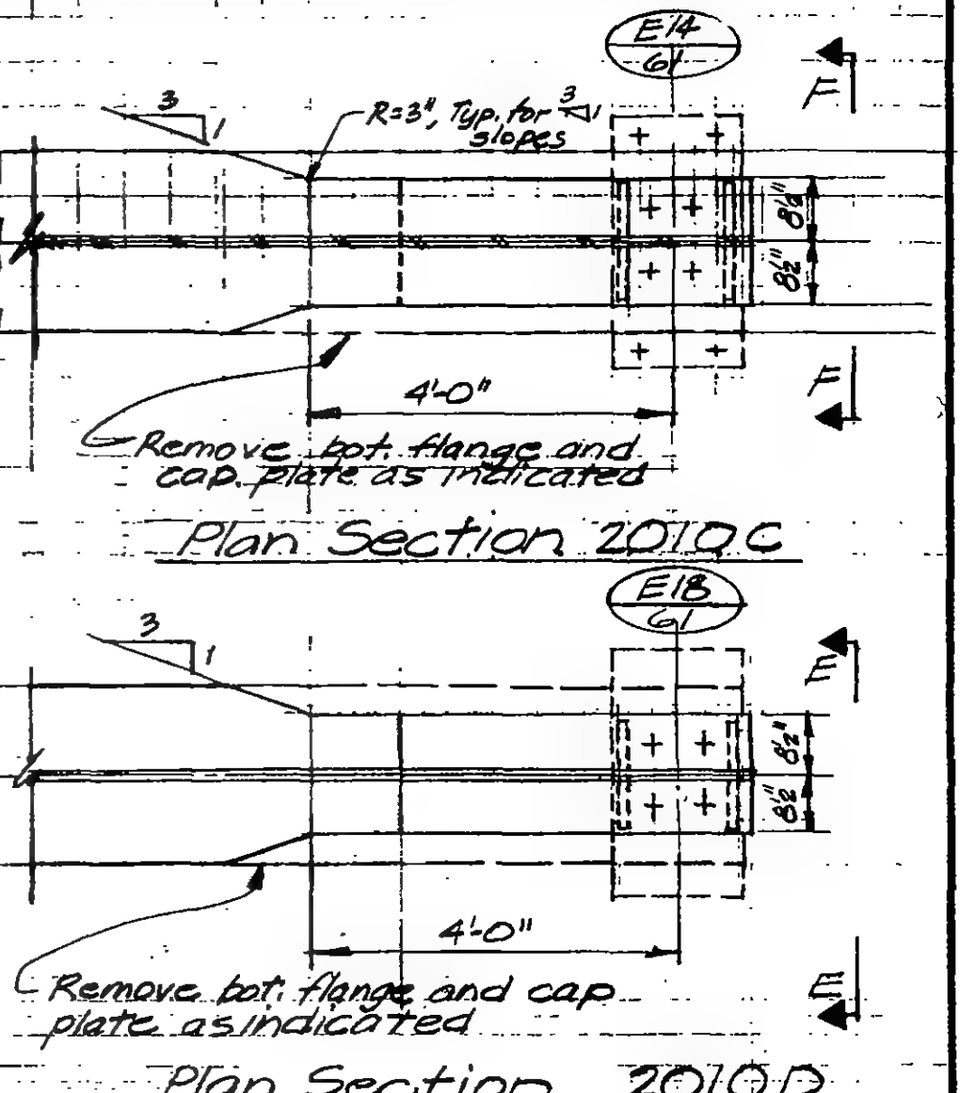

Plan Section 2010C Plan Section 2010D

Notes:

1. All new material to be ASTM A36.
2. All weld to be made with E70xx low hydrogen electrodes.
3. Complete installation of new plates and bolts prior to cutting existing material.
4. Smoothness of gas cut edges shall be ASA 500 or smoother.

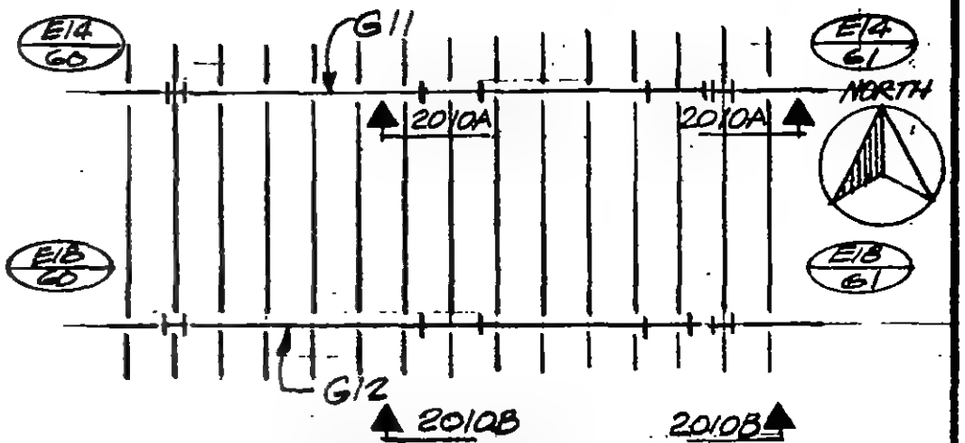

KEY PLAN @ EL. 332

N.E. Bldg. Ref. dwg. SNE-8

19-E-2010.2

LICENSED PROFESSIONAL ENGINEER — LESLIE E. ROBERTSON — No 34360 — UNIVERSITY OF THE STATE OF NEW YORK

DESIGNED

DRAWN

REVIEWED

SKILLING, HELLE, CHRISTIANSEN, ROBERTSON — Structural & Civil Engineers

PROJECT: THE WORLD TRADE CENTER | TITLE: CONCRETE OPENINGS ELEVATION 332 | DATE: 11-1-71

REVISIONS

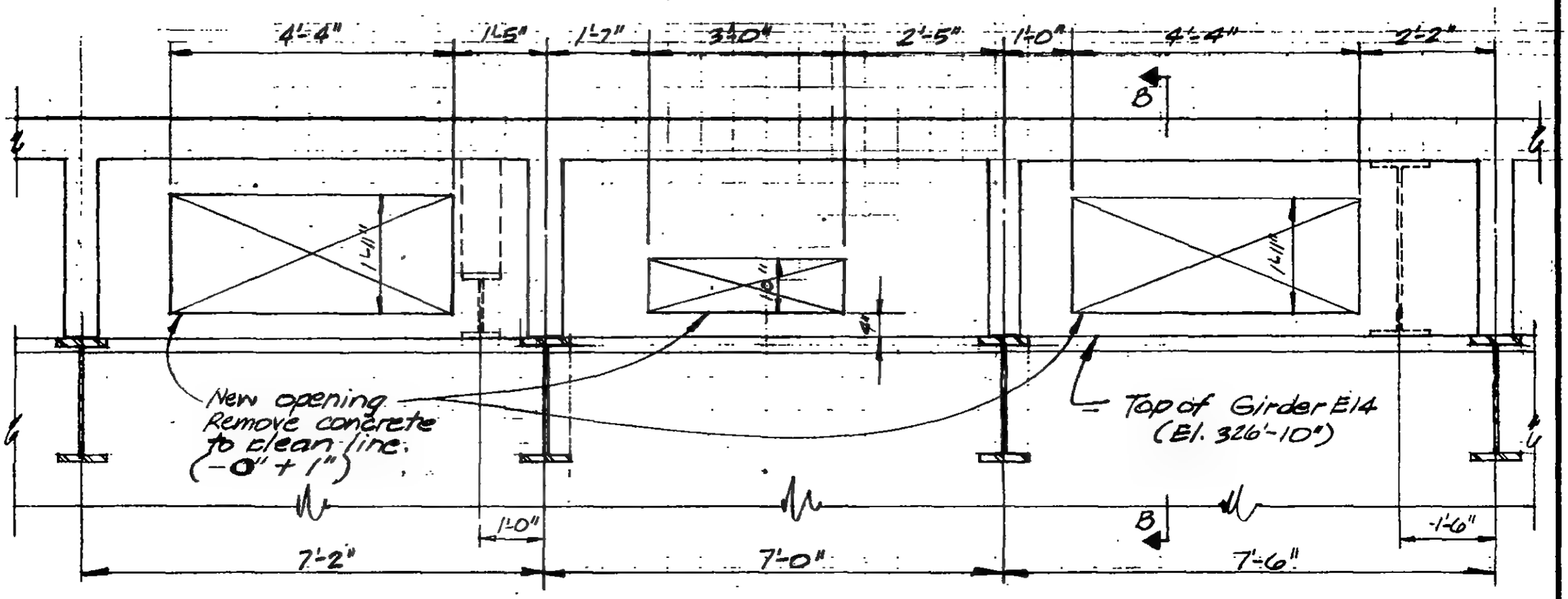

SECTION 2011A

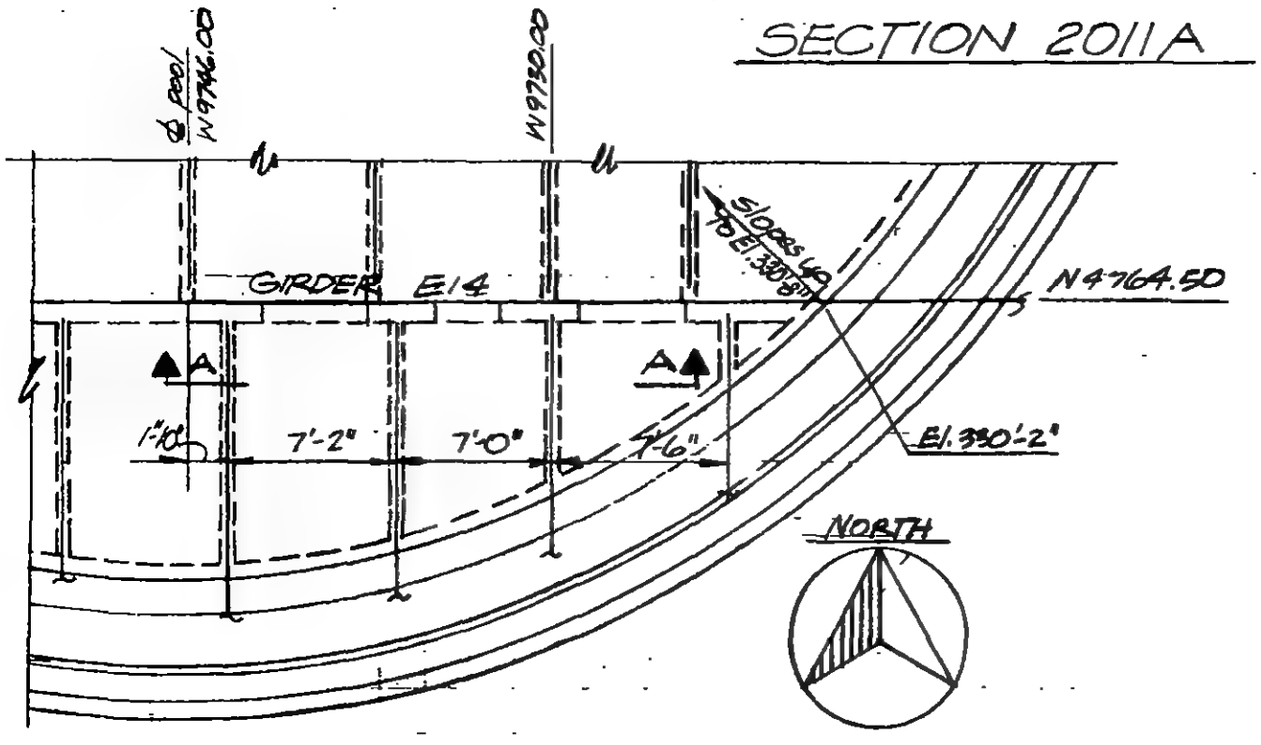

KEY PLAN

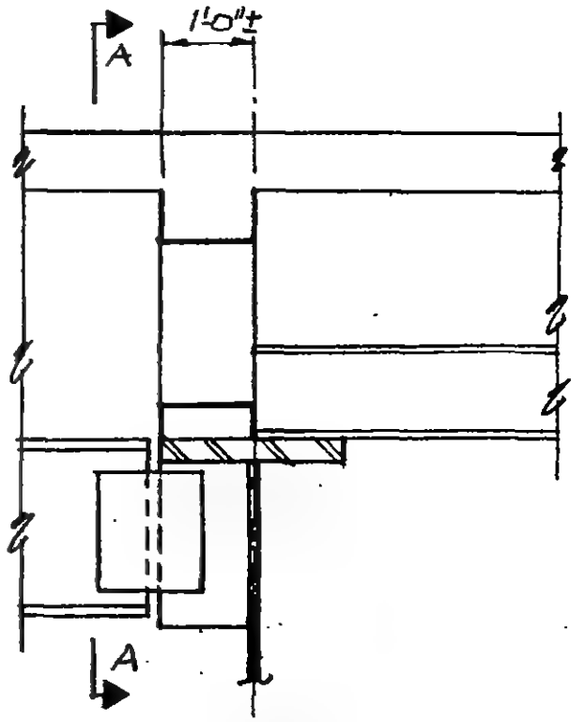

SECTION 2011B

LICENSED PROFESSIONAL ENGINEER
LESLIE E. ROBERTSON
No. 34360
UNIVERSITY OF THE STATE OF NEW YORK

DESIGNED

DRAWN P.M. Ocelin

REVIEWED

19-E-2011.

SKILLING, HELLE, CHRISTIANSEN, ROBERTSON — Structural & Civil Engineers

PROJECT: THE WORLD TRADE CENTER | TITLE: PLAZA - SECTION AT BUILDING EDGE | DATE: 1-21-72

REVISIONS

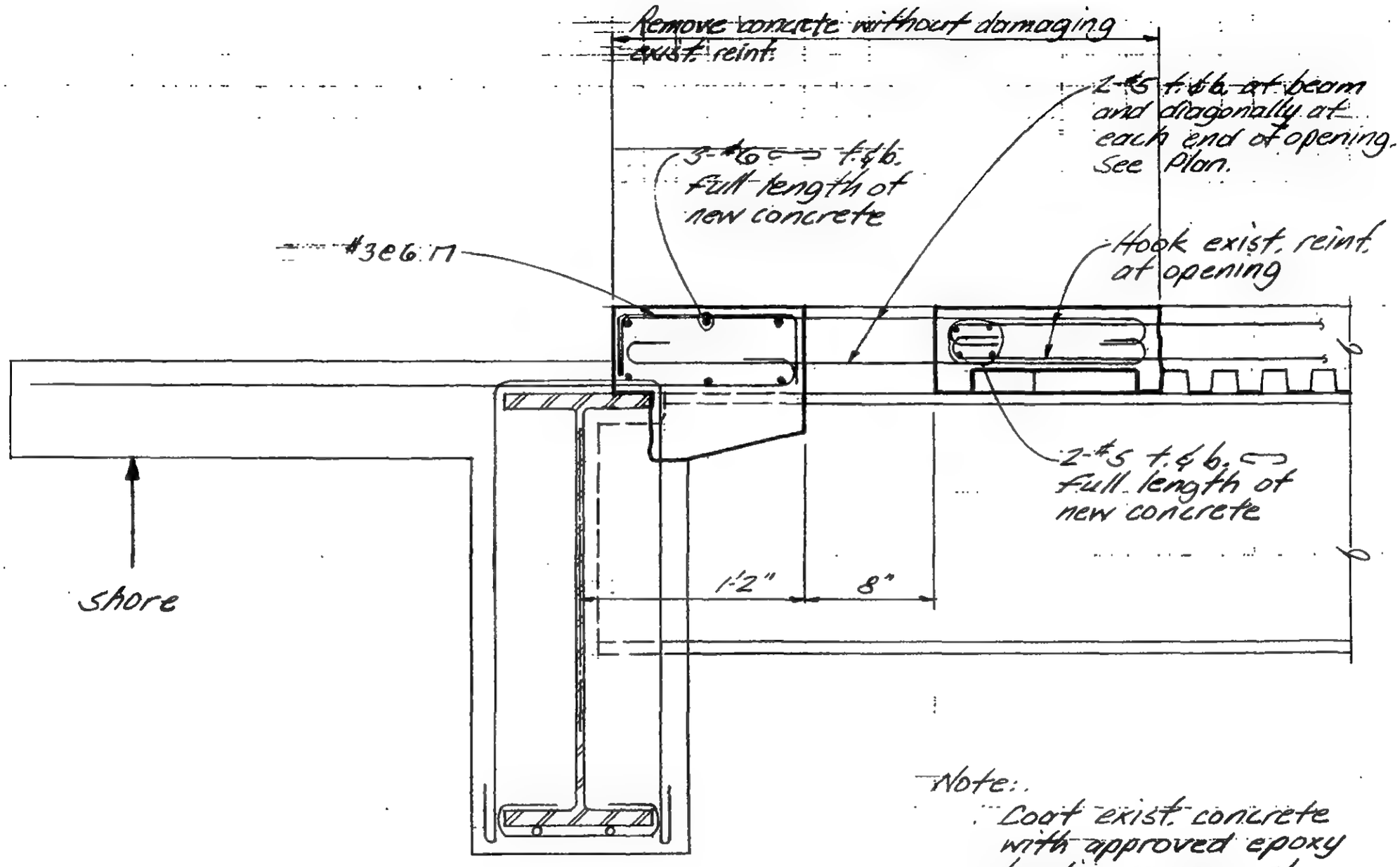

Section A-A

Note:
Coat exist. concrete with approved epoxy bonding compound before casting new concrete.

LICENSED PROFESSIONAL ENGINEER
LESLIE E. ROBERTSON
No 34360
UNIVERSITY OF THE STATE OF NEW YORK

DESIGNED

DRAWN

REVIEWED

19 E-2012.1

SKILLING, HELLE, CHRISTIANSEN, ROBERTSON — Structural & Civil Engineers

PROJECT: THE WORLD TRADE CENTER | TITLE: PLAZA - SECTION AT BUILDING EDGE | DATE: 1-21-72

REVISIONS

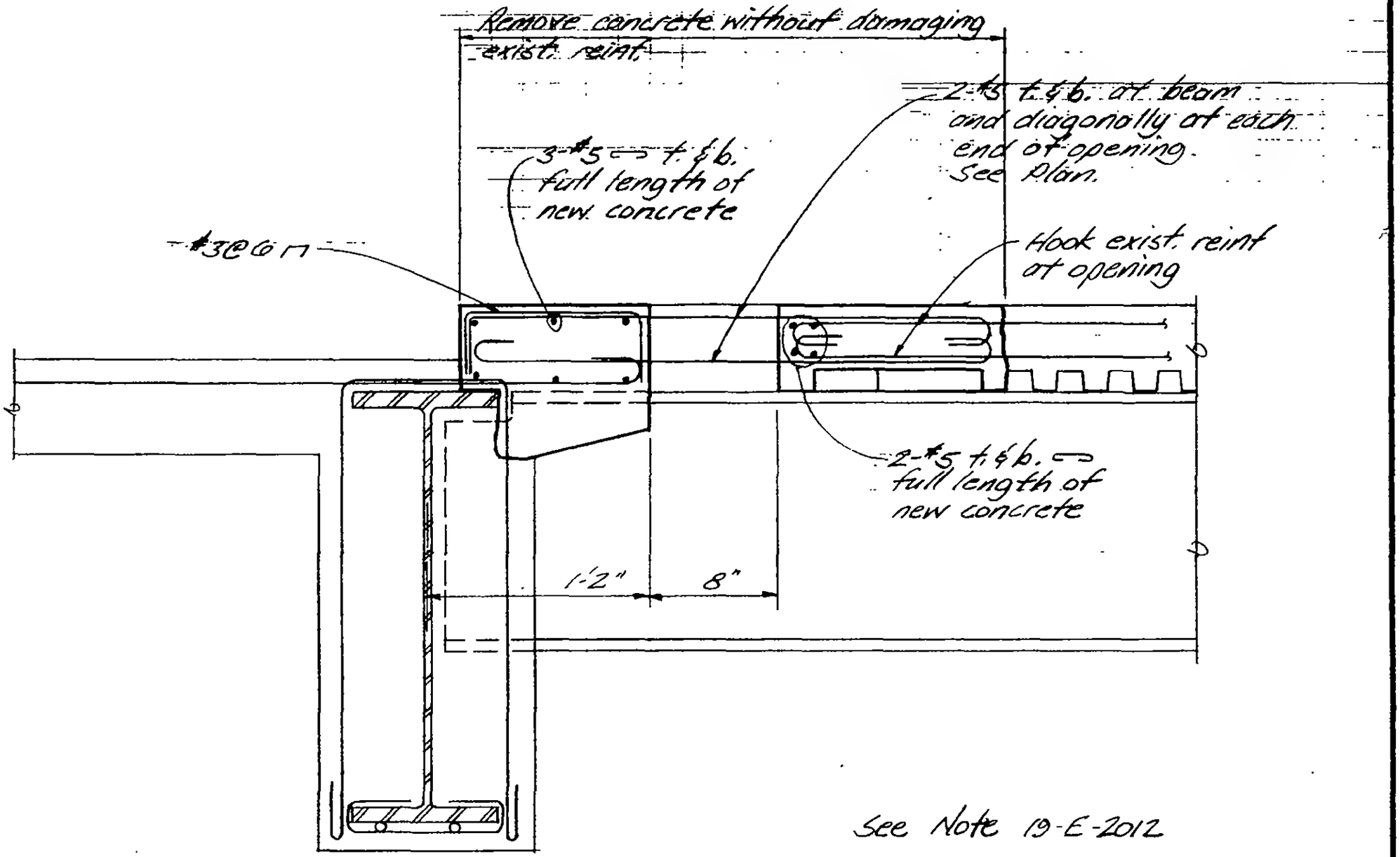

See Note 19-E-2012

Section B-B

LICENSED PROFESSIONAL ENGINEER — LESLIE E. ROBERTSON — No. 34360 — UNIVERSITY OF THE STATE OF NEW YORK

DESIGNED

DRAWN

REVIEWED

19 E-2012.2

SKILLING, HELLE, CHRISTIANSEN, ROBERTSON — Structural & Civil Engineers

PROJECT: THE WORLD TRADE CENTER | TITLE: PLAZA - SECTION AT BUILDING EDGE | DATE: 1-21-72

REVISIONS

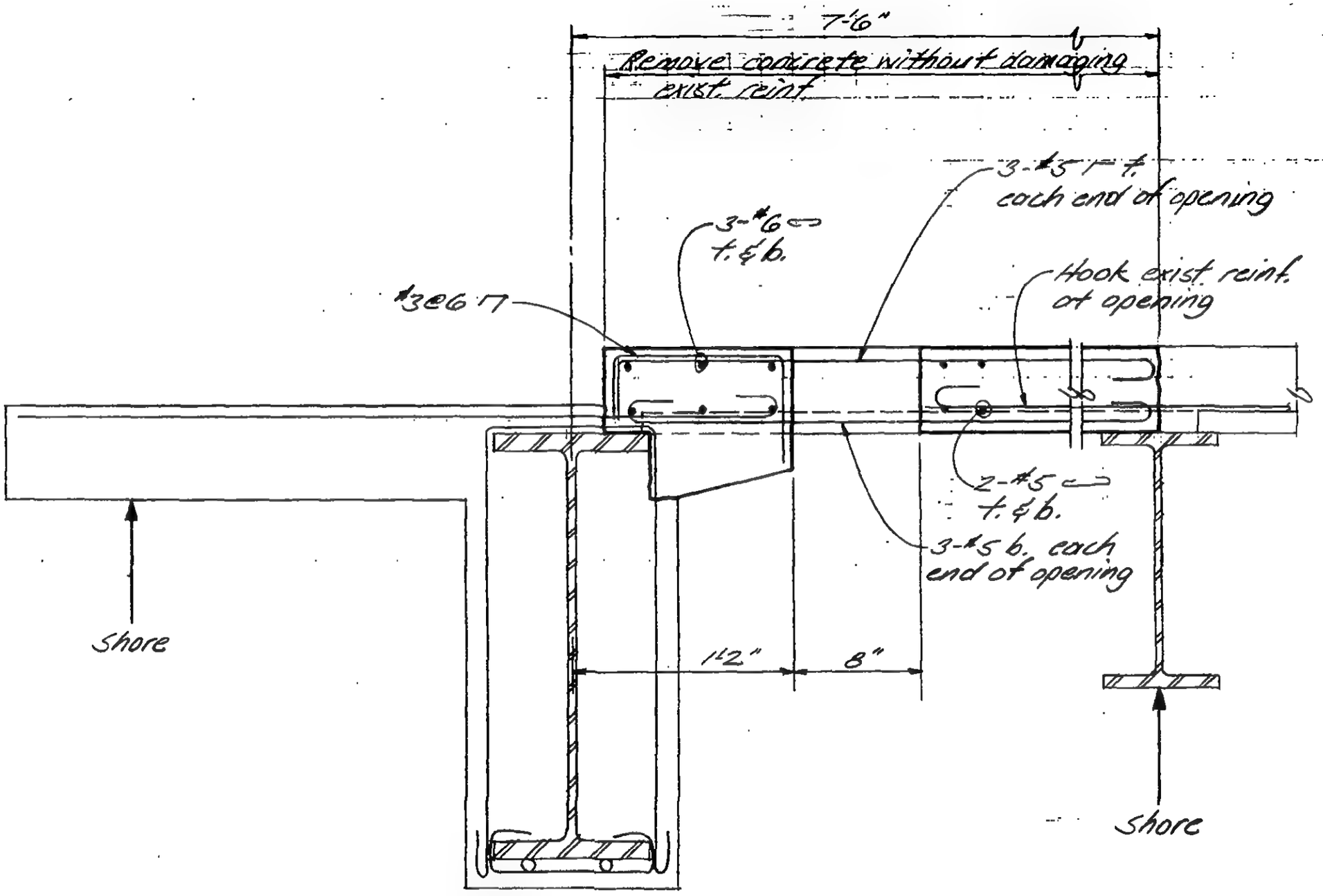

See Note 19E-2012.1

Section C-C

LICENSED PROFESSIONAL ENGINEER — LESLIE E. ROBERTSON — No 34360 — UNIVERSITY OF THE STATE OF NEW YORK

DESIGNED

DRAWN

REVIEWED

19E-2012.3

SKILLING, HELLE, CHRISTIANSEN, ROBERTSON — Structural & Civil Engineers

PROJECT: THE WORLD TRADE CENTER | TITLE: PLAZA - SECTION AT BUILDING EDGE | DATE: 1-21-72

REVISIONS

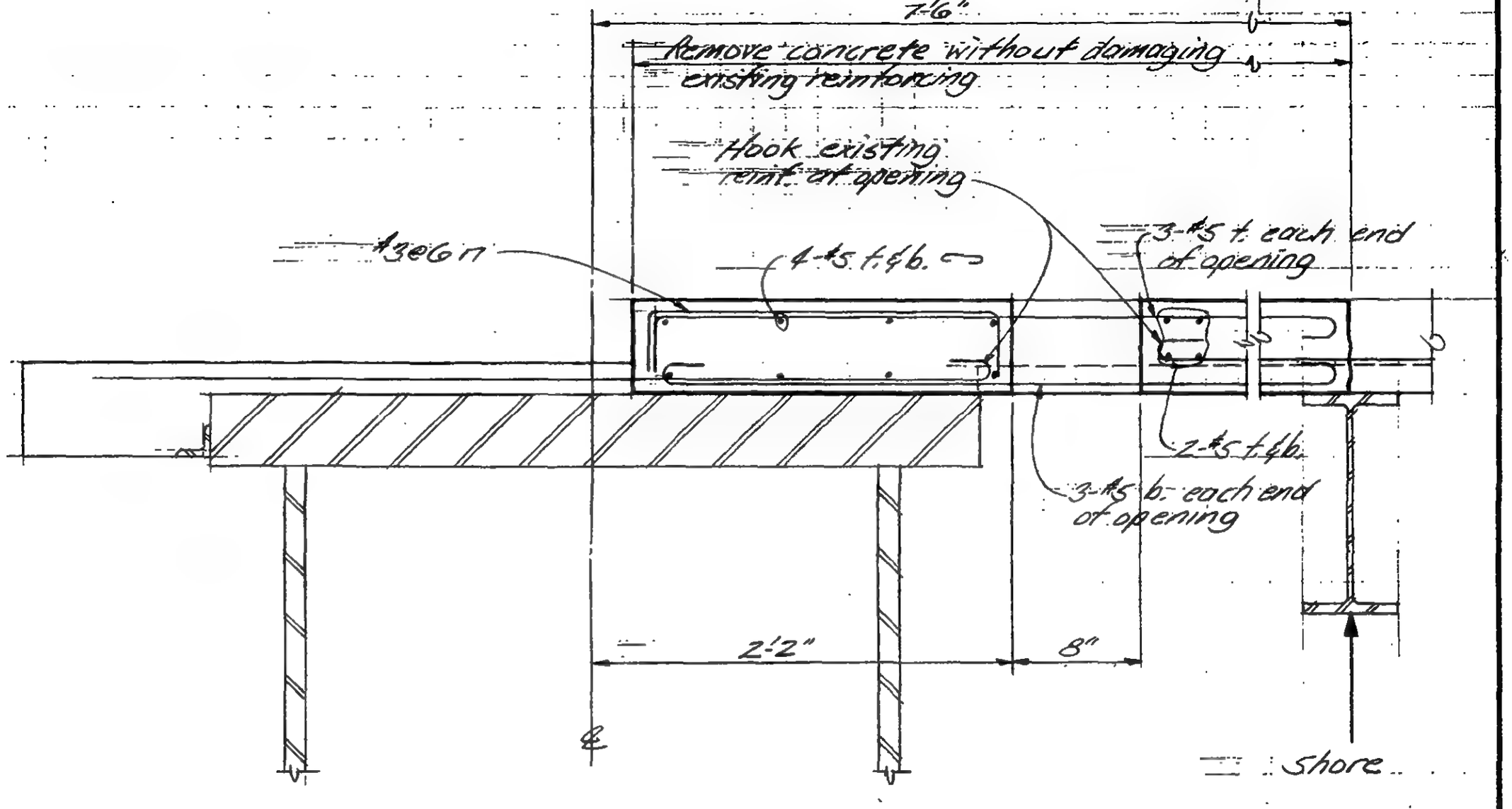

Section D-D

See Note 19-E-2012.1

LICENSED PROFESSIONAL ENGINEER — LESLIE E. ROBERTSON — No. 34360 — UNIVERSITY OF THE STATE OF NEW YORK

DESIGNED

DRAWN

REVIEWED

19-E-2012.4

WTC-NE

SKILLING, HELLE, CHRISTIANSEN, ROBERTSON — Structural & Civil Engineers

PROJECT: THE WORLD TRADE CENTER

TITLE: BASE PAD FOR TURNTABLE AND CHARGE CHAMBER

DATE: 2-2-72

REVISIONS

2/9/72
2/29/72

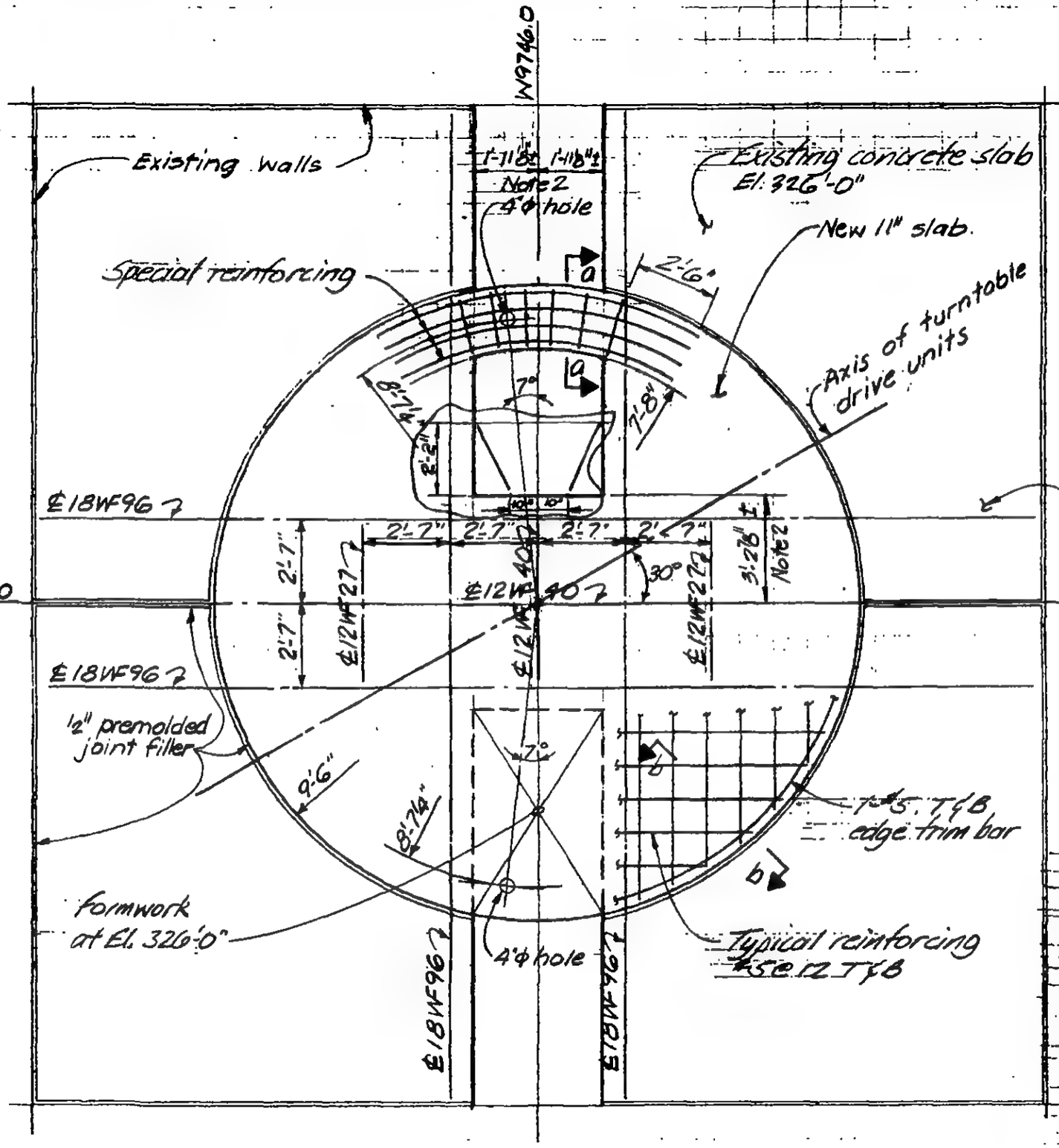

Plan

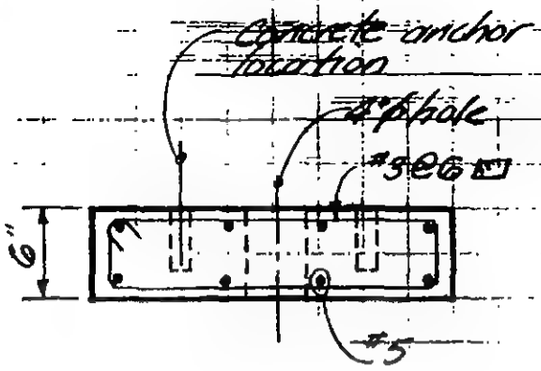

Section a-a

Note 1. Contractor for contract WTC-117.00 to install all anchor bolts and other embedded items furnished by others and to furnish and install all other embedded items.

Note 2. Align with existing concrete outline.

LICENSED PROFESSIONAL ENGINEER
LESLIE E. ROBERTSON
No. 34360
UNIVERSITY OF THE STATE OF NEW YORK

DESIGNED R. FOWLER

DRAWN A. FRANQUI

REVIEWED

19-E-2013.1

SKILLING, HELLE, CHRISTIANSEN, ROBERTSON — Structural & Civil Engineers

PROJECT: THE WORLD TRADE CENTER | TITLE: BASE AND FOUNDATION TABLE AND CHARGE CHAMBER | DATE: 2-2-72

REVISIONS

2/9/72

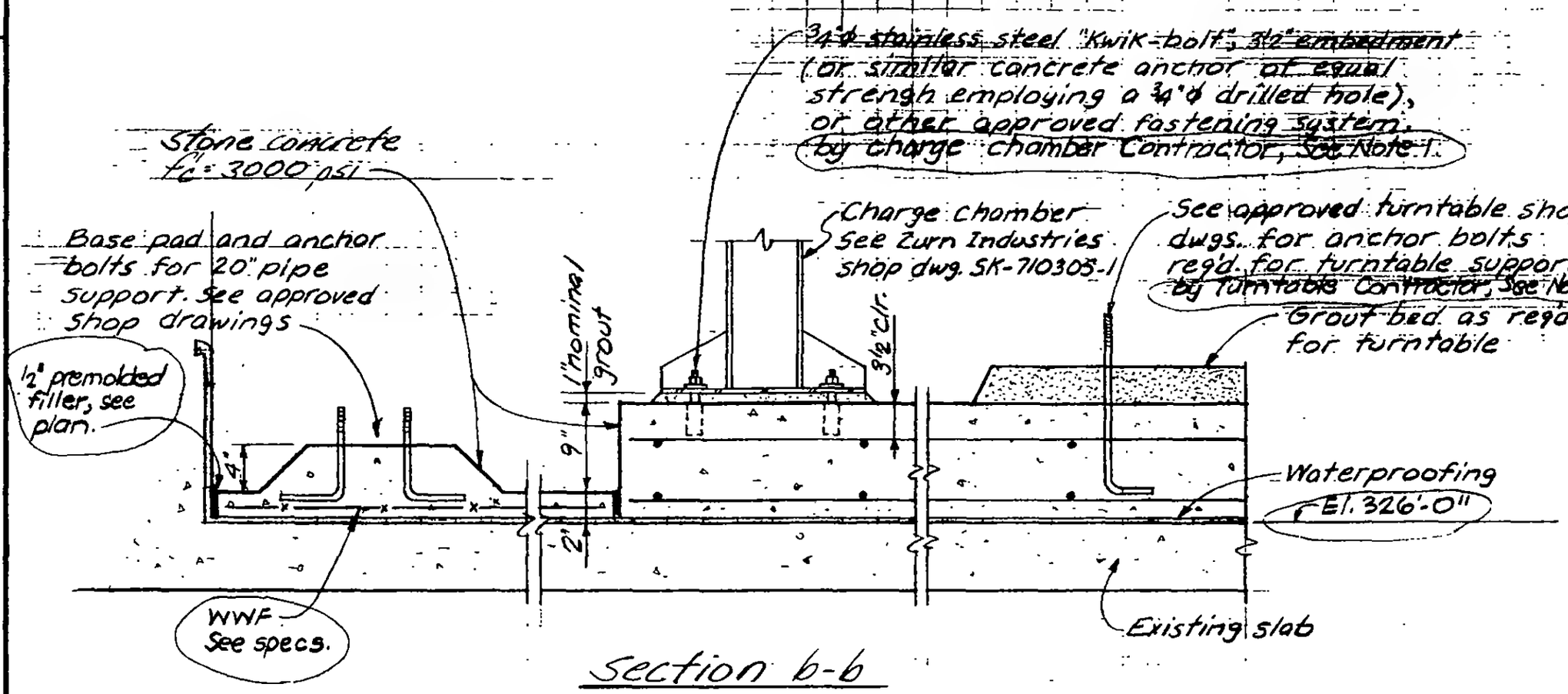

Section 6-6

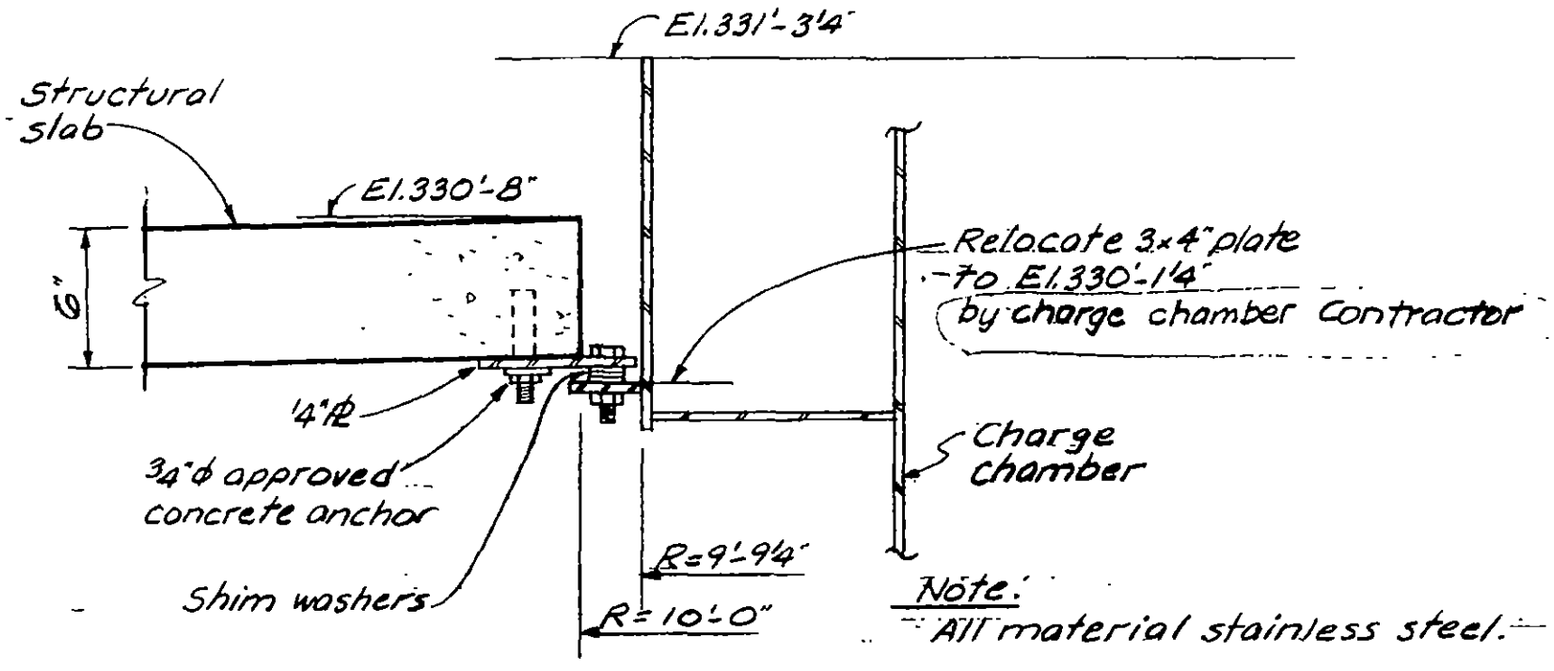

Detail at Top of Charge Chamber

LICENSED PROFESSIONAL ENGINEER — LESLIE E. ROBERTSON — No. 34960 — UNIVERSITY OF THE STATE OF NEW YORK

DESIGNED R. FOWLER

DRAWN A. FRANQUI

REVIEWED

19-E-2013.2

SKILLING, HELLE, CHRISTIANSEN, ROBERTSON — Structural & Civil Engineers

PROJECT: THE WORLD TRADE CENTER | TITLE: NEW OPENING - EL. 332 - NORTHEAST BUILDING | DATE: 2-18-72

REVISIONS

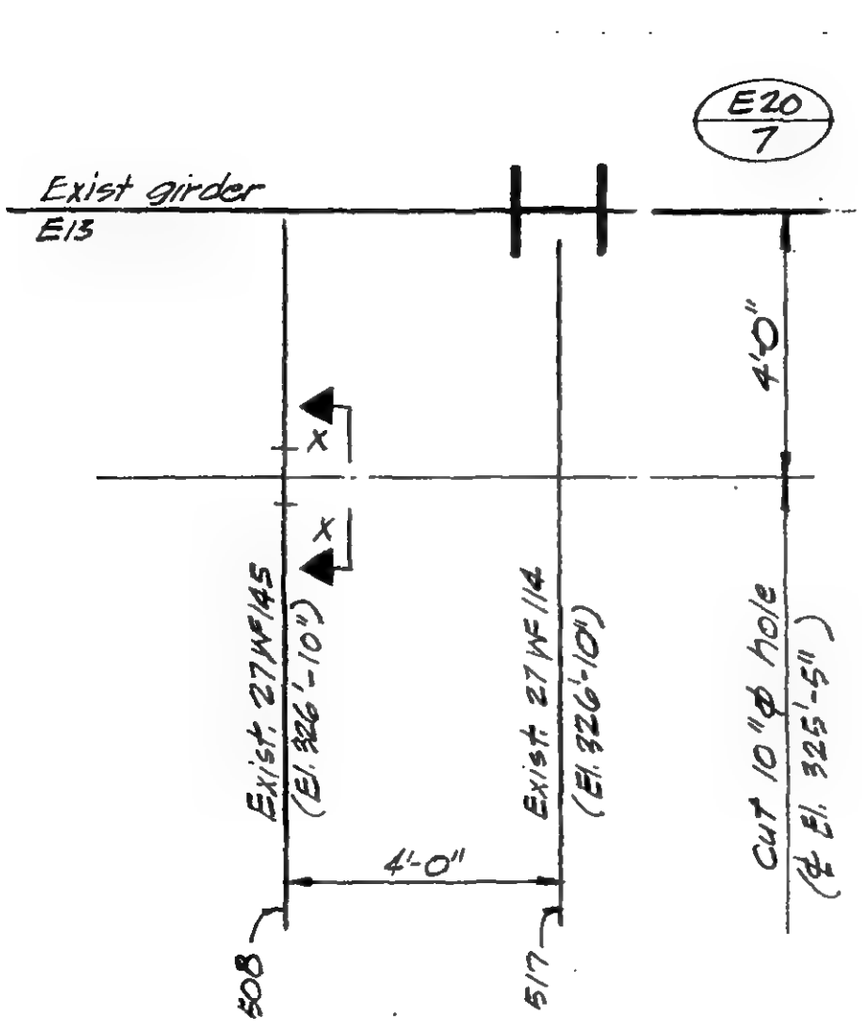

PART PLAN
El. 332' (SW) SNE-8

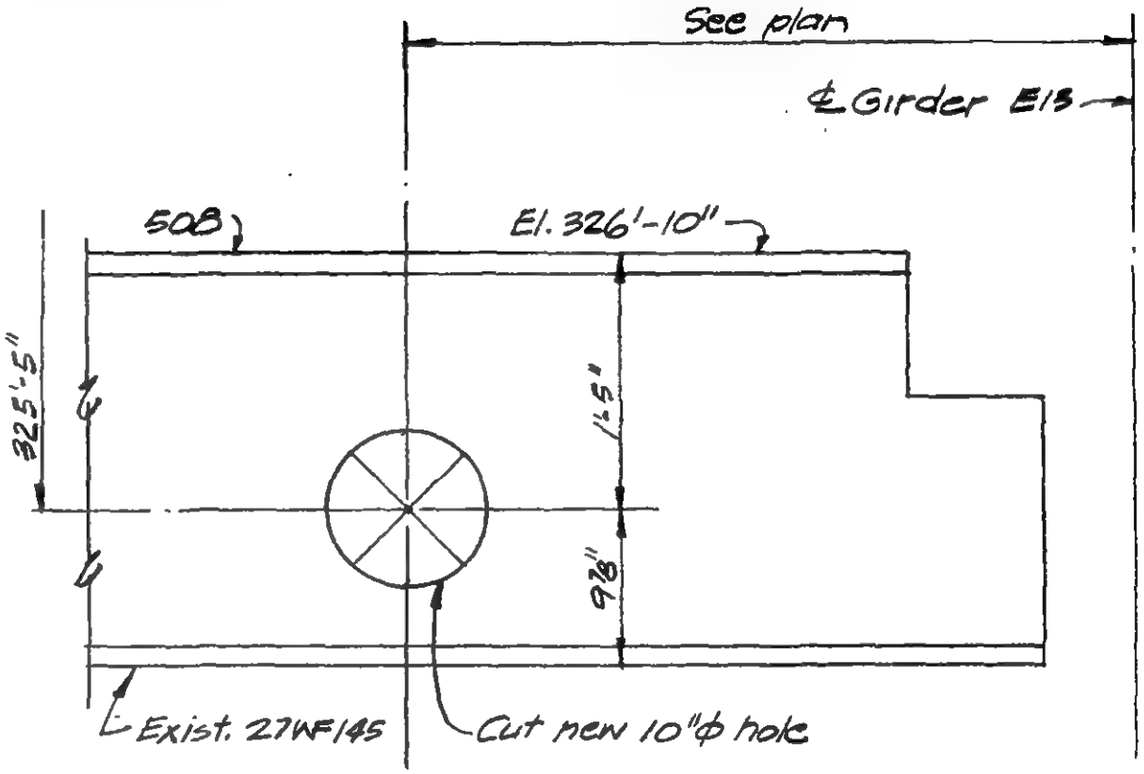

SECTION X-X

LICENSED PROFESSIONAL ENGINEER
LESLIE E. ROBERTSON
No 34360
UNIVERSITY OF THE STATE OF NEW YORK

DESIGNED

DRAWN
PM Dealer

REVIEWED

19-E-2014

SKILLING, HELLE, CHRISTIANSEN, ROBERTSON — Structural & Civil Engineers

PROJECT: THE WORLD TRADE CENTER | TITLE: BEAM OPENING AT EL. 332 | DATE: 3-24-72

REVISIONS

4/10/72

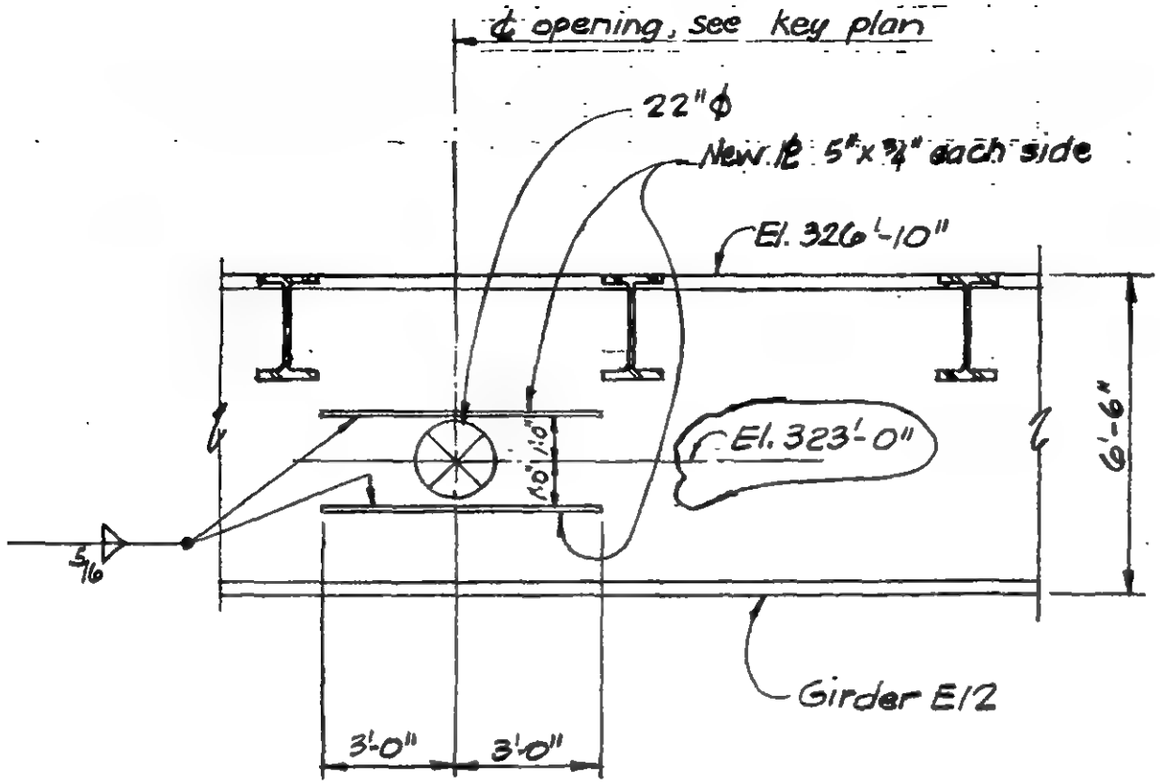

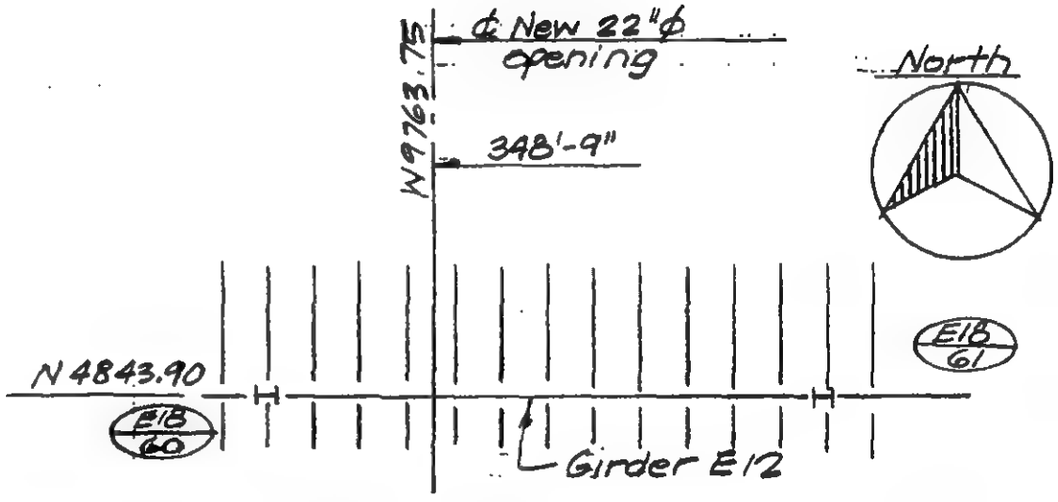

KEY PLAN @ EL. 332
N.E. Bldg. Ref. dwg SNE-8

Notes:

1. All new material to be ASTM A36.
2. All welds to be made with E 70xx low hydrogen electrodes.
3. Complete installation of new plates prior to cutting existing material.
4. Smoothness of gas cut edges shall be ASA 500 or smoother.

LICENSED PROFESSIONAL ENGINEER — LESLIE E. ROBERTSON — No. 34360 — UNIVERSITY OF THE STATE OF NEW YORK

DESIGNED: WAB

DRAWN: P.M. Oakley

REVIEWED: W. Brewer

19-E-2015

SKILLING, HELLE, CHRISTIANSEN, ROBERTSON — Structural & Civil Engineers

PROJECT THE WORLD TRADE CENTER | TITLE BEAM OPENING AT EL. 332 | DATE 3-24-72

REVISIONS

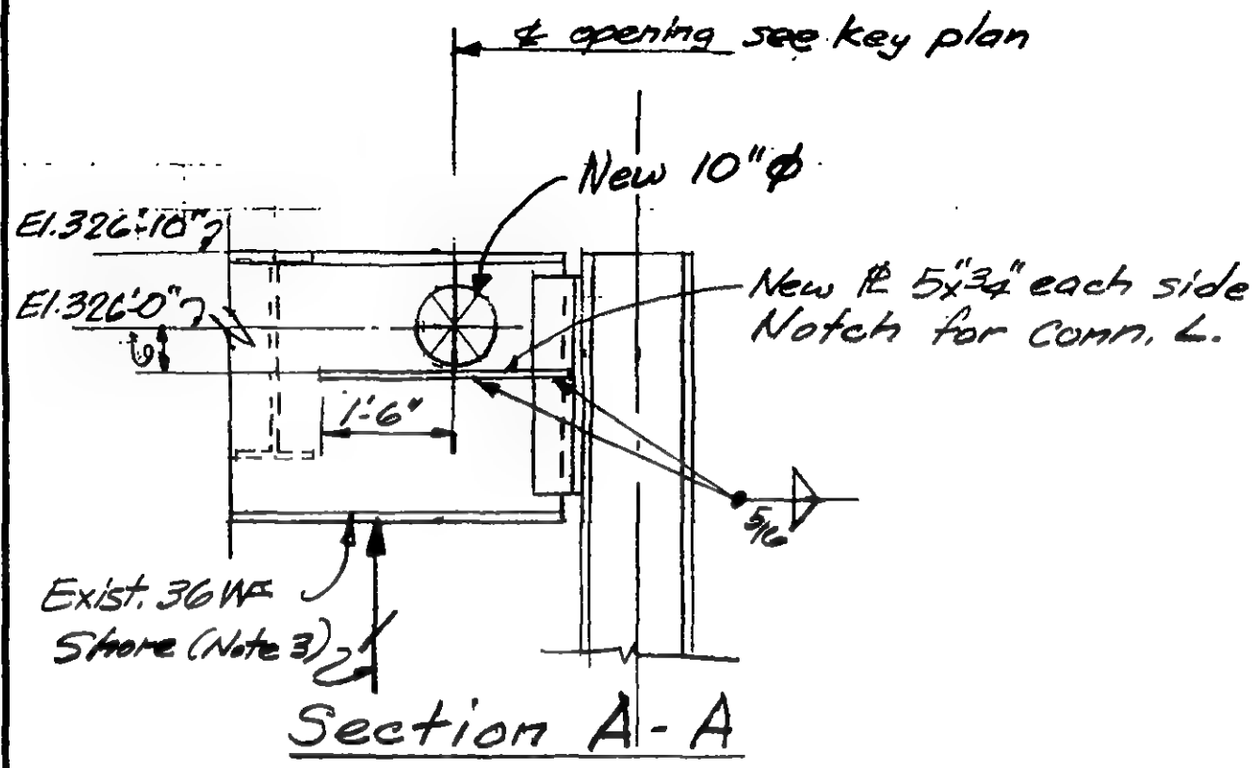

Section A-A

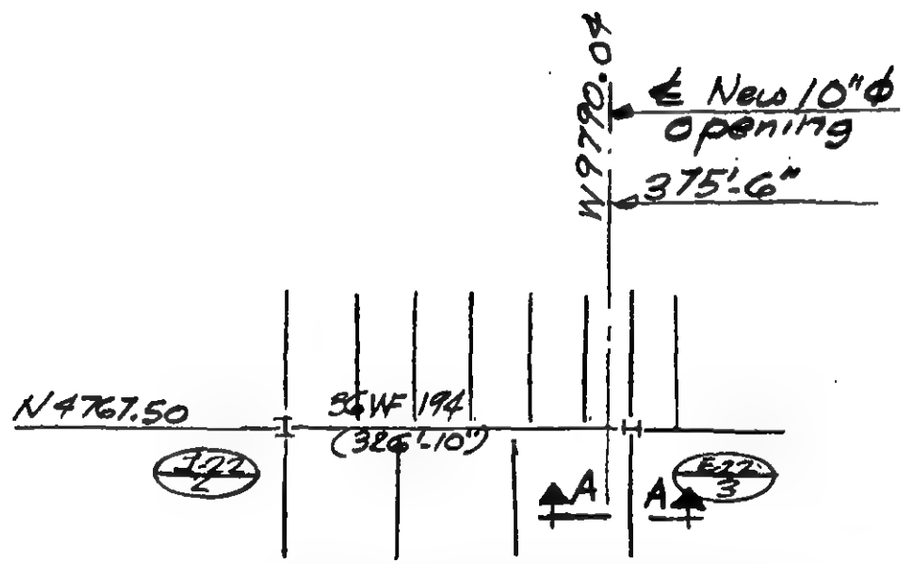

KEY PLAN @ EL 332
NE Bldg. Ref. dwg SNE-8

Notes:

1. All new material to be ASTM A36.
2. All welds to be made with E 70xx low hydrogen electrodes.
3. Complete installation of new plates and bolts prior to cutting existing material. Share beam during cutting operation.
4. Smoothness of gas cut edges shall be ASA 500 or smoother.

LICENSED PROFESSIONAL ENGINEER — LESLIE E. ROBERTSON — No 34360 — UNIVERSITY OF THE STATE OF NEW YORK

DESIGNED

DRAWN

REVIEWED C.D. Brewer

19-E-2016

SKILLING, HELLE, CHRISTIANSEN, ROBERTSON — Structural & Civil Engineers

PROJECT: THE WORLD TRADE CENTER | TITLE: NORTHEAST BLDG. - EL. 332 - CANTILEVER SLAB SUPPORT | DATE: 5-22-72

REVISIONS

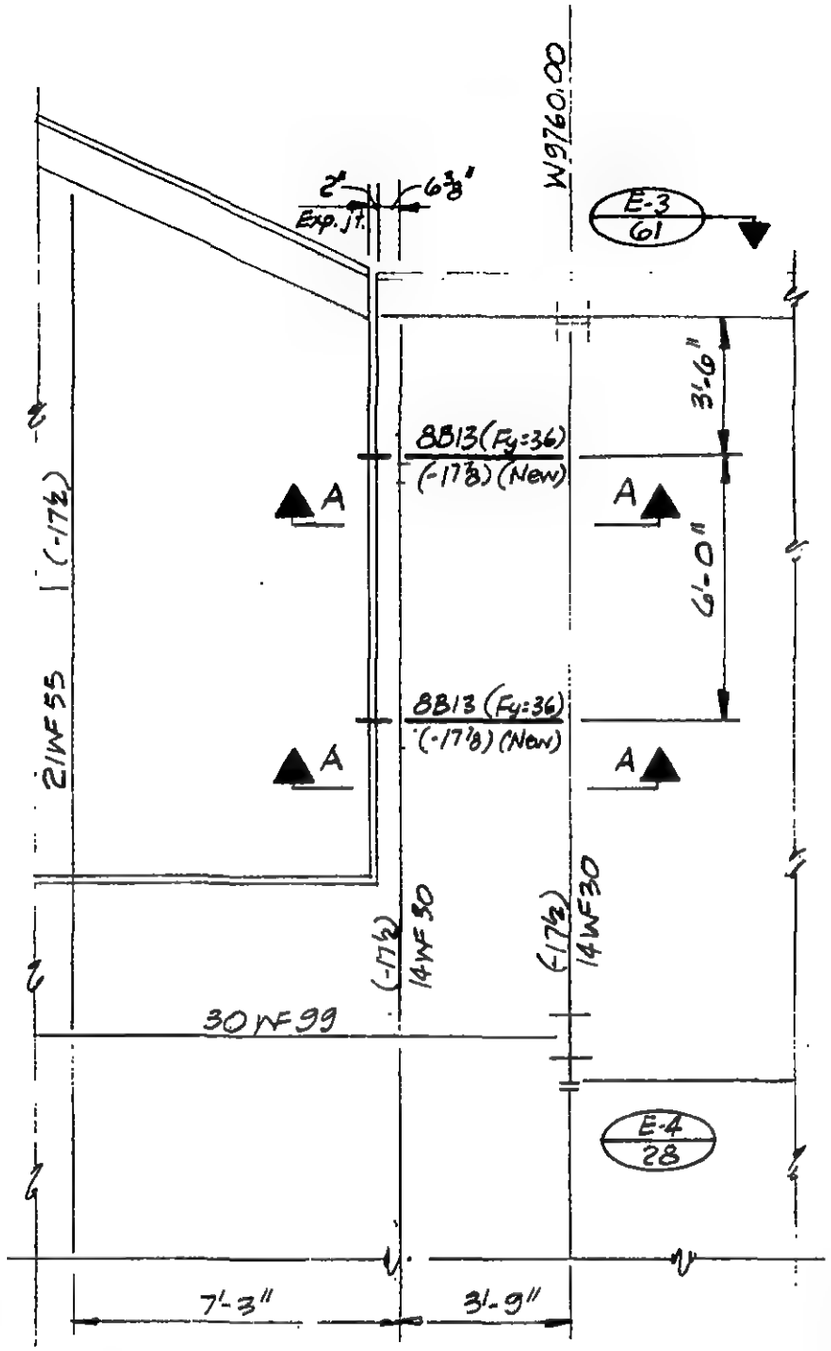

Partial Floor Framing @ NW Corner

North

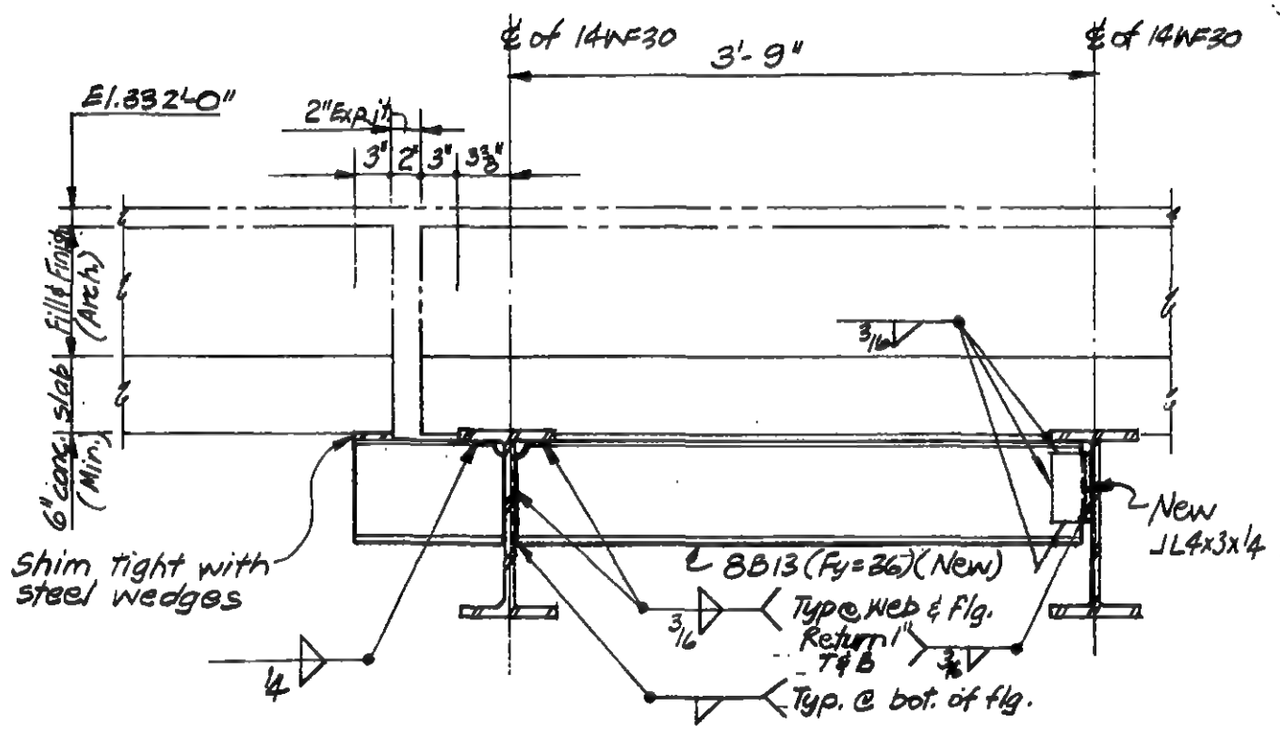

Section A-A

LICENSED PROFESSIONAL ENGINEER — LESLIE E. ROBERTSON — No. 34360 — UNIVERSITY OF THE STATE OF NEW YORK

DESIGNED KH

DRAWN

REVIEWED WAB

19-E-2017

SKILLING, HELLE, CHRISTIANSEN, ROBERTSON — Structural & Civil Engineers

PROJECT: THE WORLD TRADE CENTER | TITLE: CONCRETE OPENING EL. 332 | DATE: 9-18-72

REVISIONS

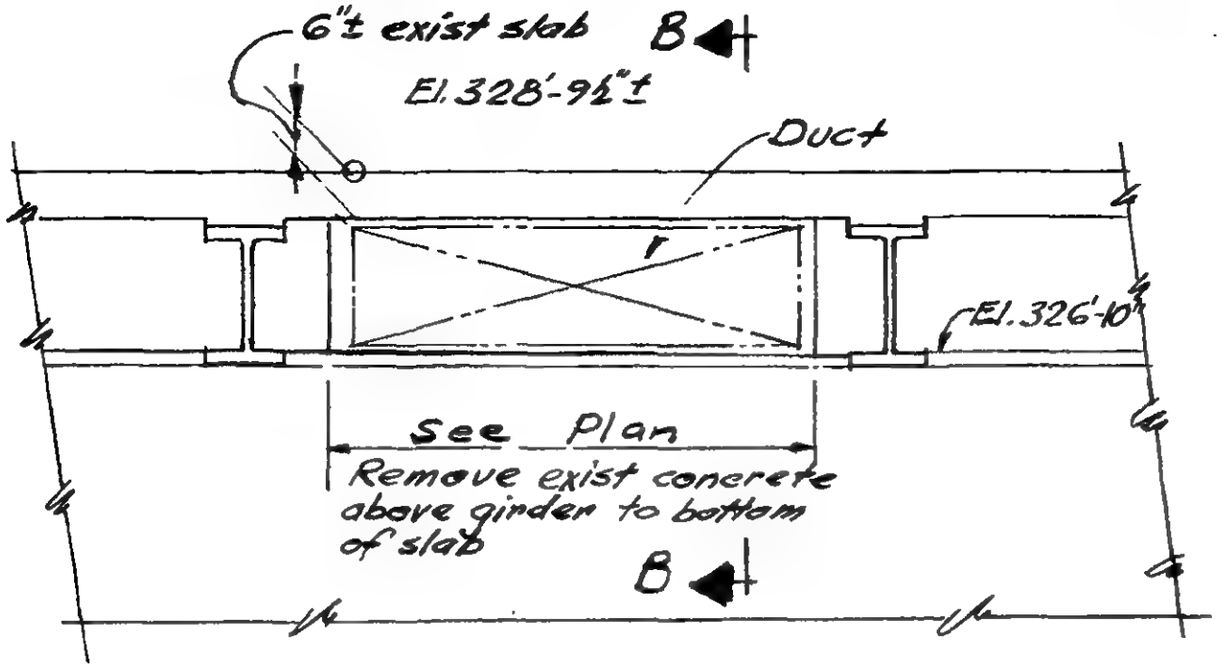

Section A-A

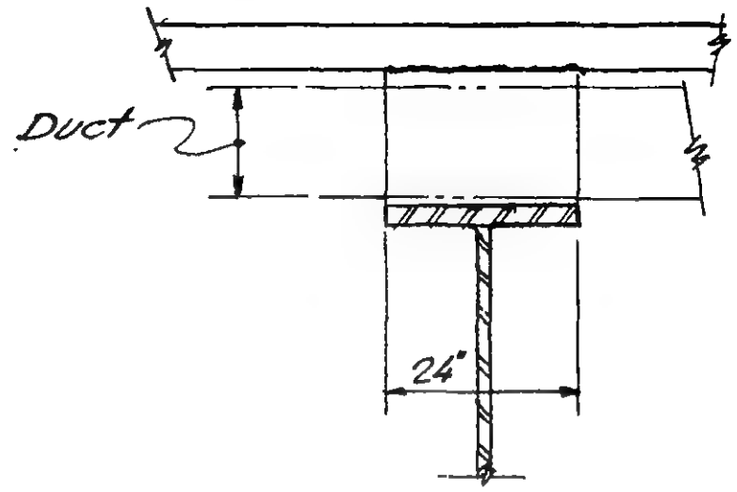

Section B-B

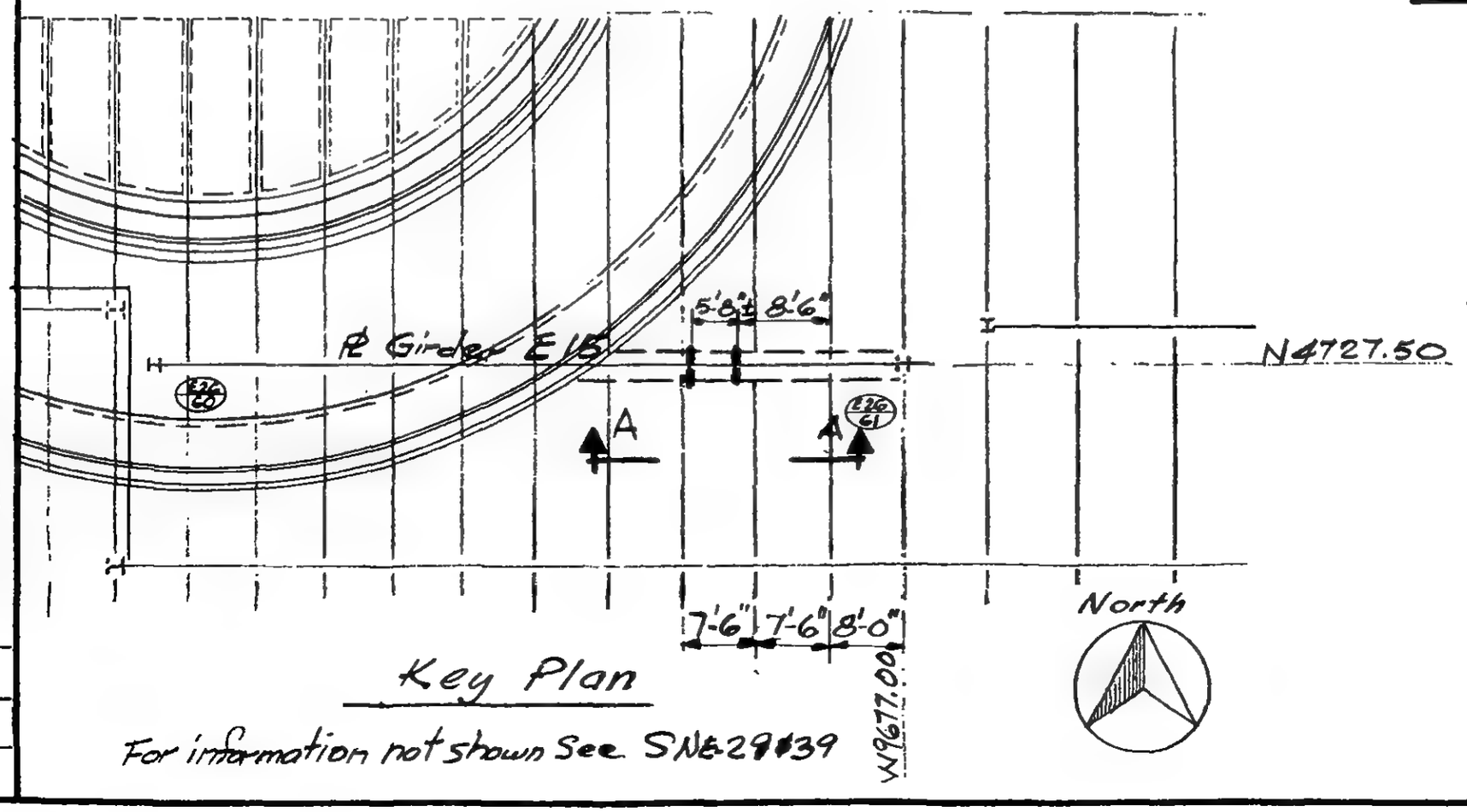

Key Plan

For information not shown See SNE29#39

LICENSED PROFESSIONAL ENGINEER — LESLIE E. ROBERTSON — No. 34360 — UNIVERSITY OF THE STATE OF NEW YORK

DESIGNED

DRAWN JG

REVIEWED WOB

19-E-2018

SKILLING, HELLE, CHRISTIANSEN, ROBERTSON — Structural & Civil Engineers

PROJECT: THE WORLD TRADE CENTER | TITLE: BEAM CUTS - FLOOR 4 NE BLDG. | DATE: 7-6-73

REVISIONS

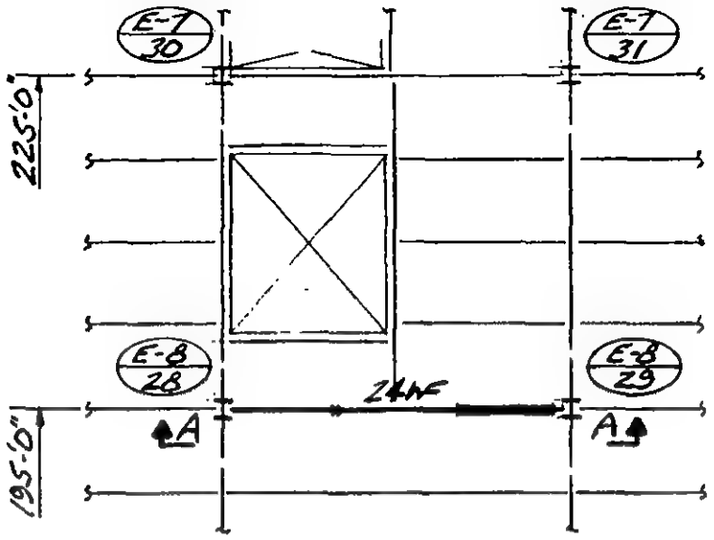

PART PLAN Fl. 4 East | SNE-13

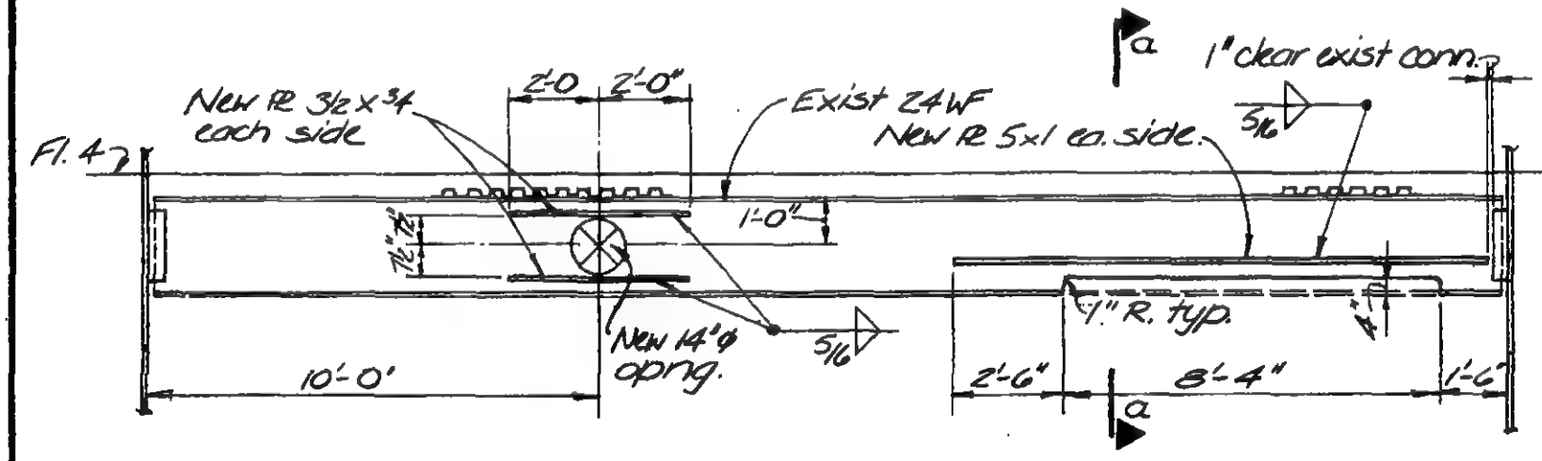

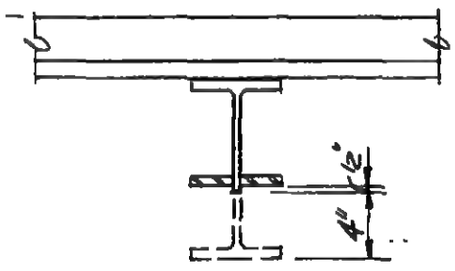

Install new PL's before removing exist. material

LICENSED PROFESSIONAL ENGINEER — LESLIE E. ROBERTSON — No. 34360 — UNIVERSITY OF THE STATE OF NEW YORK

DESIGNED JTM
DRAWN JA
REVIEWED CWAB

A | a | 19-E-2019

SKILLING, HELLE, CHRISTIANSEN, ROBERTSON — Structural & Civil Engineers

PROJECT: THE WORLD TRADE CENTER | TITLE: NEW OPENINGS - N.E. BLDG. - FLOOR 9 | DATE: 4-30-74

REVISIONS

Deleted by PA
Ch # 405-215 (5-5-75)

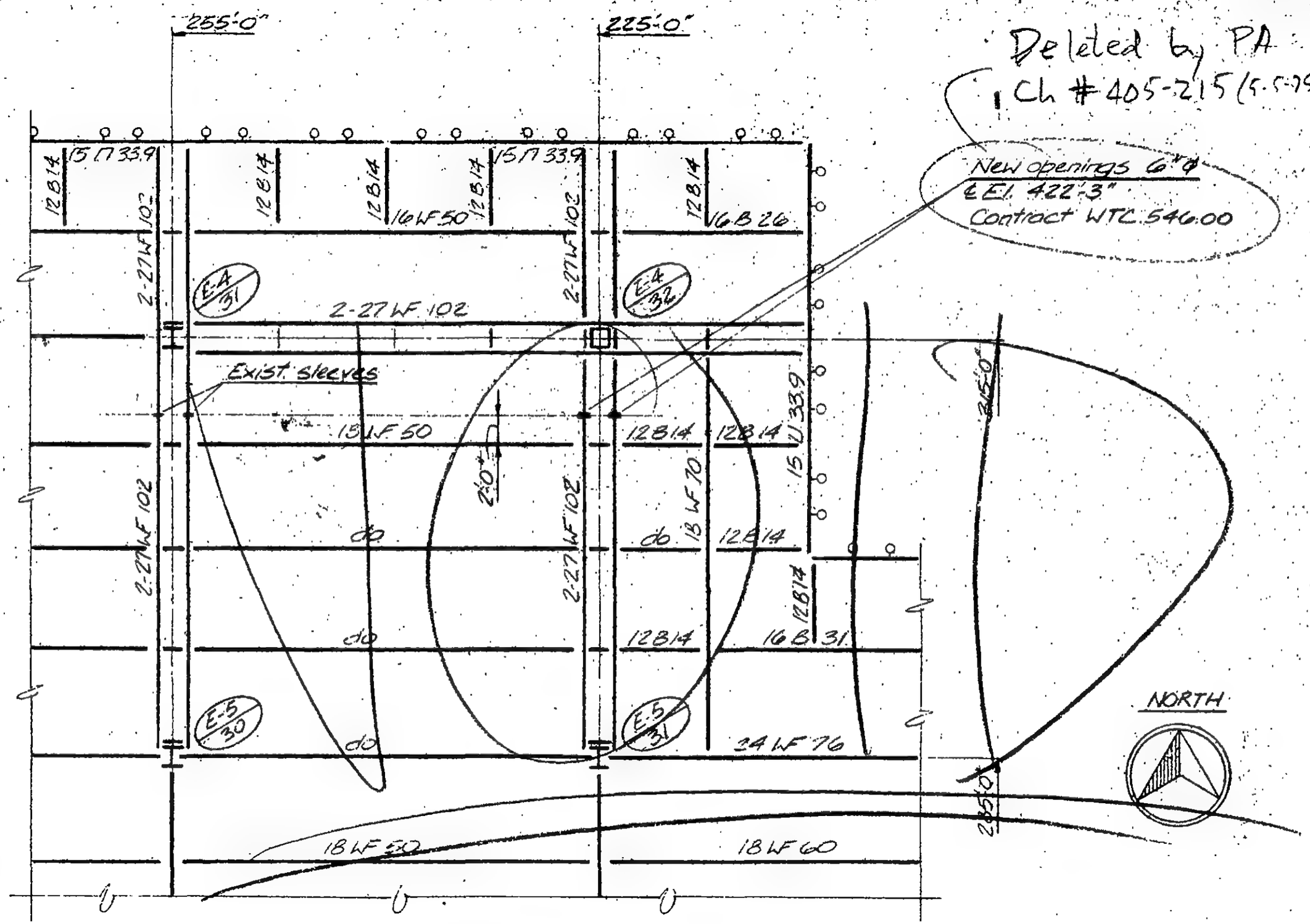

New openings 6"ø
@ El. 422'-3"
Contract WTC 546.00

Part Plan Floor 9 West.
(Ref. SNE-21)

LICENSED PROFESSIONAL ENGINEER
LESLIE E. ROBERTSON
No 34360
UNIVERSITY OF THE STATE OF NEW YORK

SIGNED WAB
DRAWN J.B
REVIEWED

19-E-2020

SKILLING, HELLE, CHRISTIANSEN, ROBERTSON — Structural & Civil Engineers

PROJECT: THE WORLD TRADE CENTER | TITLE: MODIFICATION TO PH ROOF FRAMING - TOWER B | DATE: 9-27-71

REVISIONS

CONSTRUCTION PROCEDURE

1. Temporarily remove two 12WF40 and two 12WF45 bearing on girder 4-2P at coordinates 106'-11", 113'-7", 120'-3" and 126'-11".
2. Remove and discard three 12WF40 with 12WF40 stubs and one 12WF58 at lower framing. (19B-2100A1).
3. Shore all framing connected to girder and Columns 608 and 708.
4. Disconnect all members framing to girder. Cut 24WF and 24B. Raise girder sufficiently to permit installation of new stubs on Columns 608 and 708. (19B-2100 B1 & B2).
5. Install girder in new location fixing and reconnecting members framing thereto. (19B-2100A1, A2, B1 & B2).
6. Remove shores.

LICENSED PROFESSIONAL ENGINEER — LESLIE E. ROBERTSON — No. 34360 — UNIVERSITY OF THE STATE OF NEW YORK

DESIGNED: J. OET

DRAWN: J. Adams

REVIEWED:

19B-2100.1

SKILLING, HELLE, CHRISTIANSEN, ROBERTSON — Structural & Civil Engineers

PROJECT: THE WORLD TRADE CENTER | TITLE: MODIFICATION TO PH ROOF FRAMING - TOWER B | DATE: 9/27/71

REVISIONS

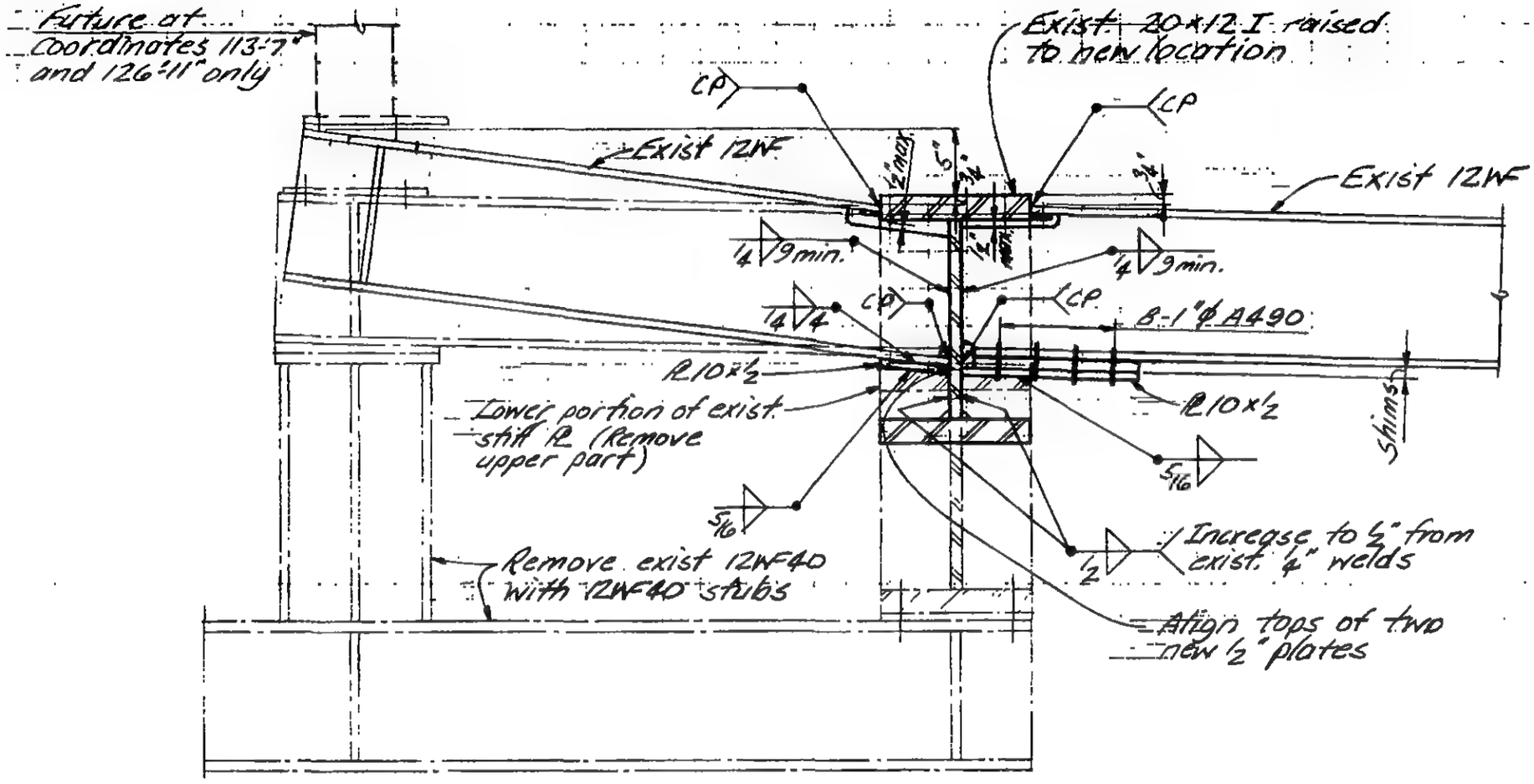

Detail A1

LICENSED PROFESSIONAL ENGINEER — LESLIE E. ROBERTSON — No. 34360 — UNIVERSITY OF THE STATE OF NEW YORK

DESIGNED: T. Roet

DRAWN: J. Adams

REVIEWED

19B-2100.2

SKILLING, HELLE, CHRISTIANSEN, ROBERTSON — Structural & Civil Engineers

PROJECT: THE WORLD TRADE CENTER | TITLE: MODIFICATION TO P.H. ROOF FRAMING - TOWER B | DATE: 9/27/71

REVISIONS

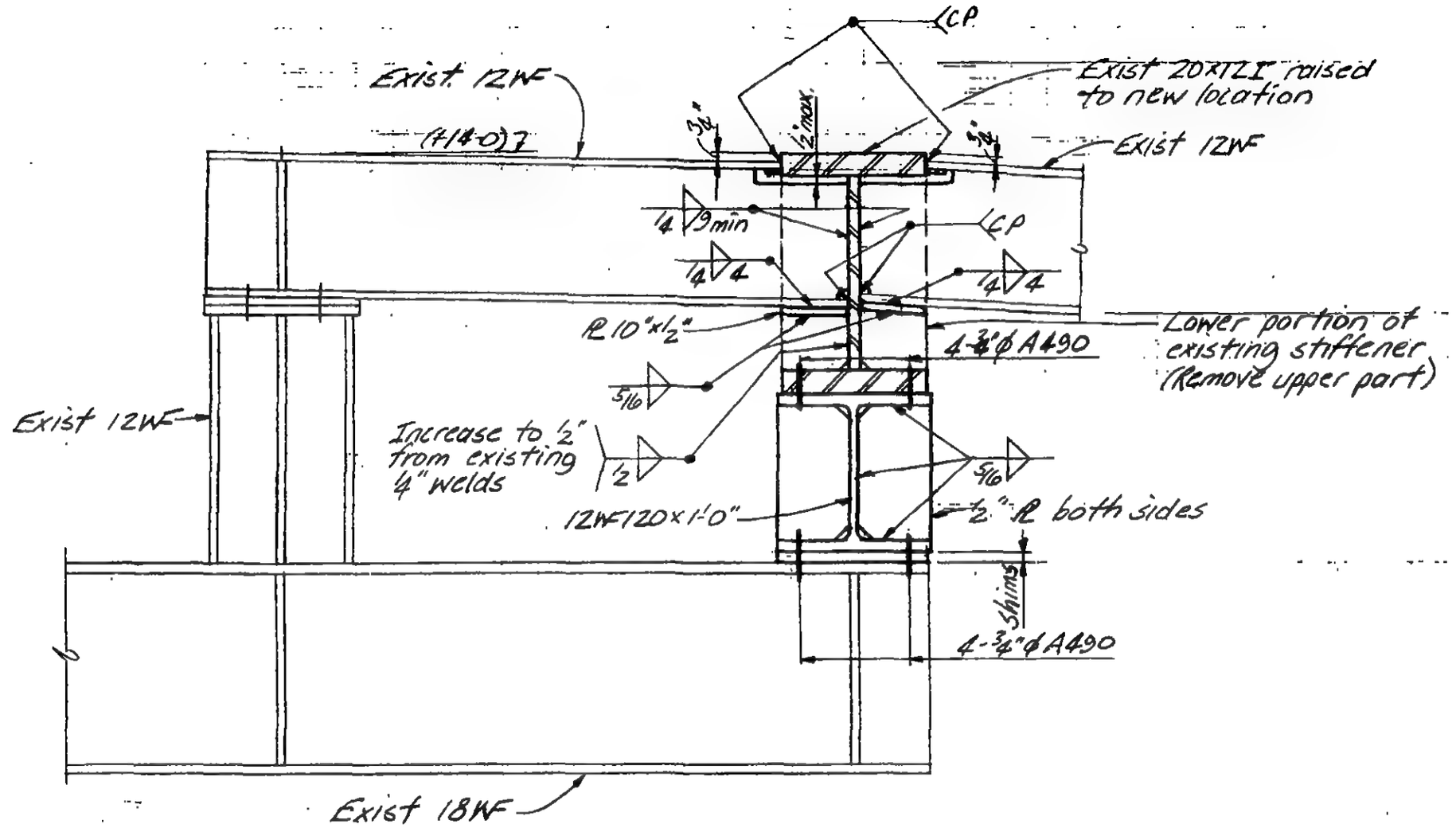

Detail A2

LICENSED PROFESSIONAL ENGINEER — LESLIE E. ROBERTSON — No. 34360 — UNIVERSITY OF THE STATE OF NEW YORK

DESIGNED H. ROET

DRAWN J. Adams

REVIEWED

19B-2100.3

SKILLING, HELLE, CHRISTIANSEN, ROBERTSON — Structural & Civil Engineers

PROJECT: THE WORLD TRADE CENTER | TITLE: MODIFICATION TO P.H. ROOF FRAMING - TOWER B | DATE: 9/27/71

REVISIONS

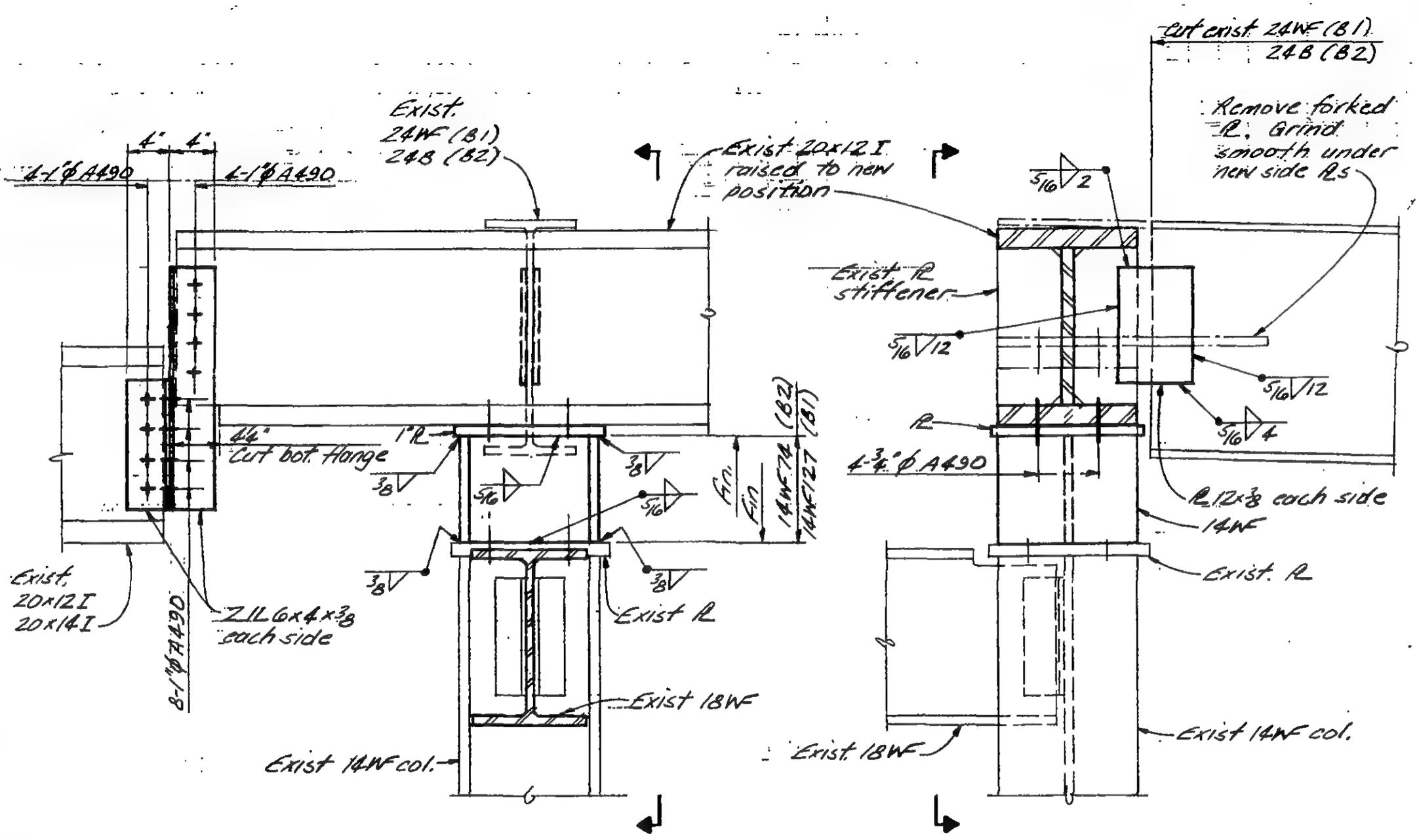

Detail B1 & B2

LICENSED PROFESSIONAL ENGINEER — LESLIE E. ROBERTSON — No. 34360 — UNIVERSITY OF THE STATE OF NEW YORK

DESIGNED: H. Root

DRAWN: J. Adams

REVIEWED:

198-2100.4

SKILLING, HELLE, CHRISTIANSEN, ROBERTSON — Structural & Civil Engineers

PROJECT: THE WORLD TRADE CENTER | TITLE: MODIFICATIONS TO EL 332 FRAMING | DATE: 10-4-71

REVISIONS

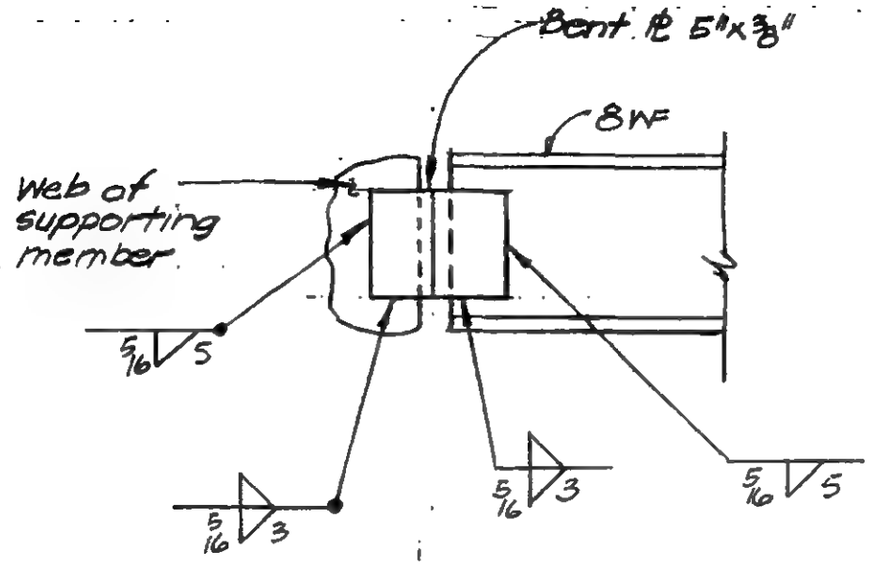

Detail A

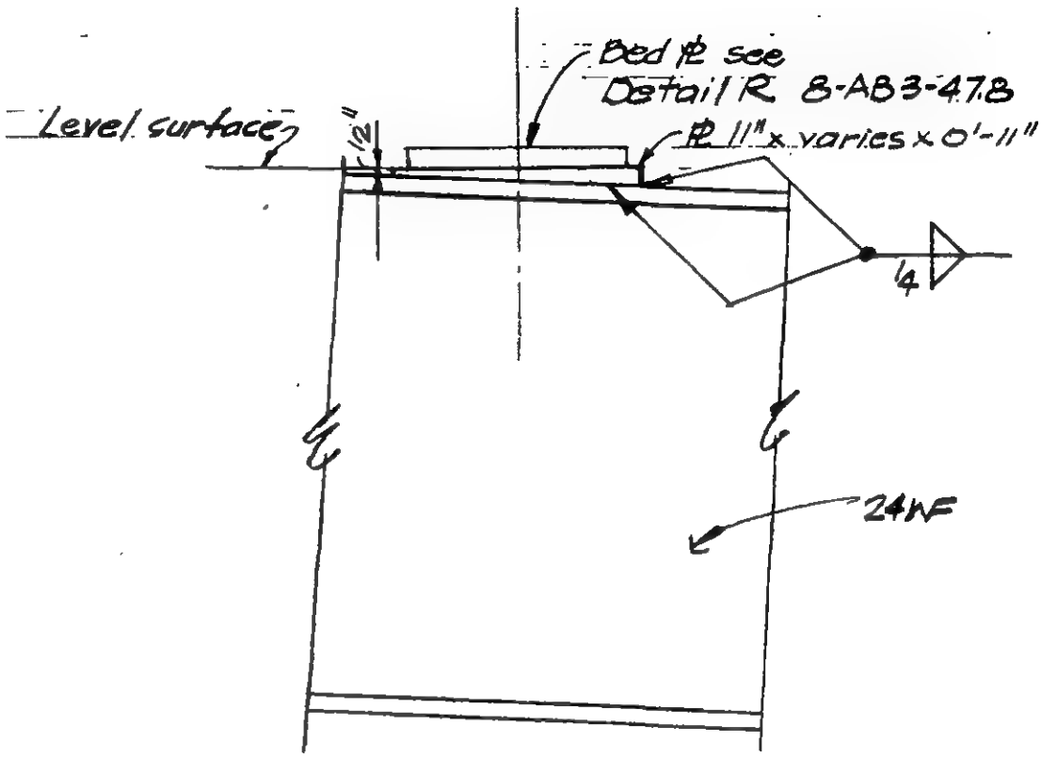

Detail B

LICENSED PROFESSIONAL ENGINEER
LESLIE E. ROBERTSON
No 34960
UNIVERSITY OF THE STATE OF NEW YORK

DESIGNED J. Roer
DRAWN Alu Ordi
REVIEWED

19-K-2200

Structural & Civil Engineers

PROJECT [redacted] WORLD TRADE [redacted]

INDEX & GENERAL NOTES

DATE 6-29-73

REVISIONS

Index

19-X3-1 Index & General Notes
19-X3-2.1 Details at North Support.
2.2 Details at North Support.
2.3 Details at North Support.
2.4 Details at North Support.

19-X3-3.1 Details at Center Support.
3.2 Details at Center Support.
3.3 Details at Center Support.
3.4 Details at Center Support.
3.5 Details at Center Support.
3.6 Details at Center Support.

General Notes - Structural Steel

1. All construction shall be in accordance with Basic Project Specifications.
2. See SK-102 for framing Plan at North and Center Supports.

End of Planning

LICENSED PROFESSIONAL ENGINEER
LESLIE E. ROBERTSON
No 34360
UNIVERSITY OF THE STATE OF NEW YORK

SIGNED WAB

DRAWN [redacted]

REVIEWED HR, WAB

SKILLING, HELLE, CHRISTIANSEN, ROBERTSON — Structural & Civil Engineers

PROJECT: LIBERTY STREET BRIDGE
WORLD TRADE CENTER - MODIFICATION

NORTH SUPPORT

DATE 6-29-73

REVISIONS

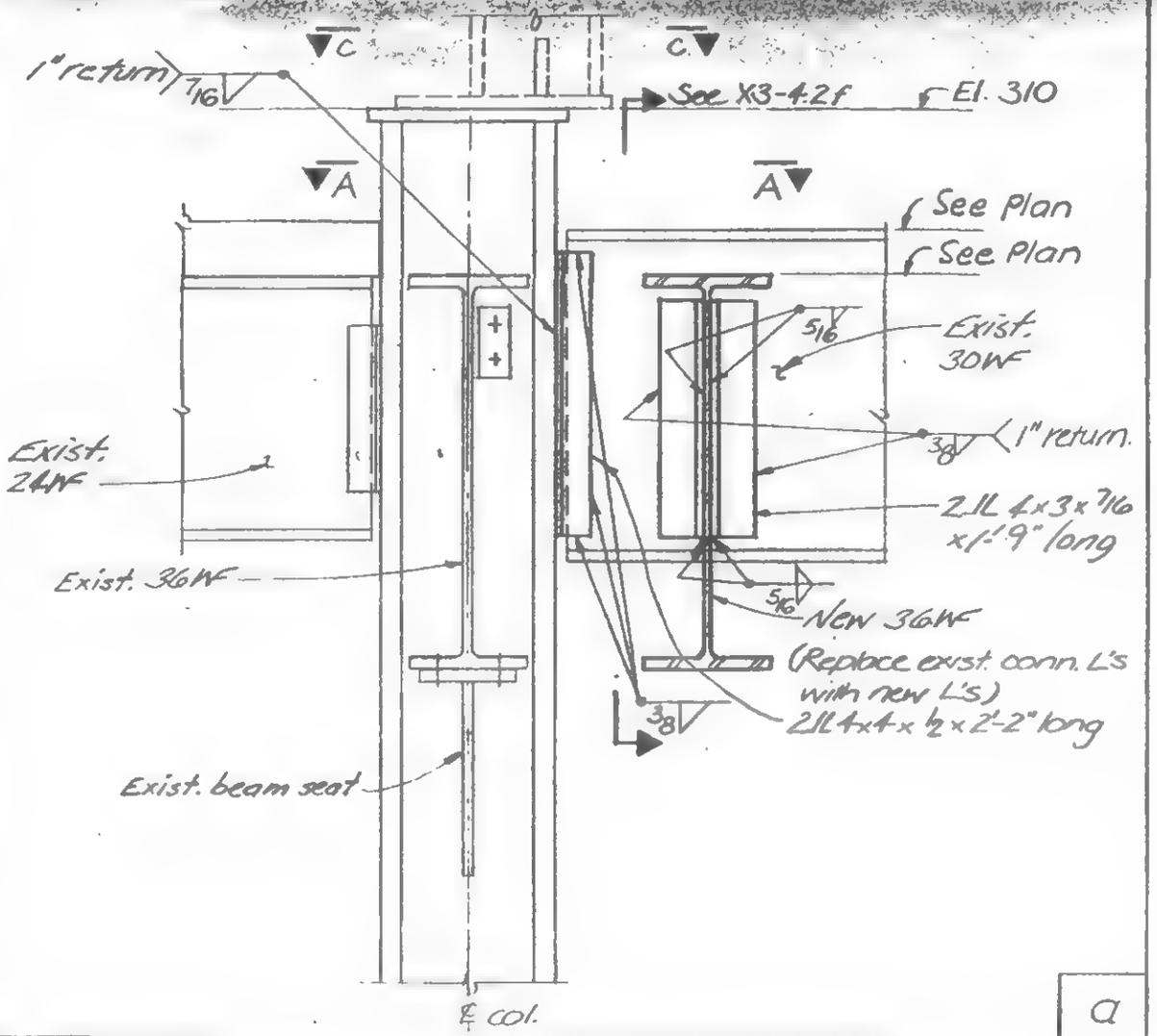

a

c

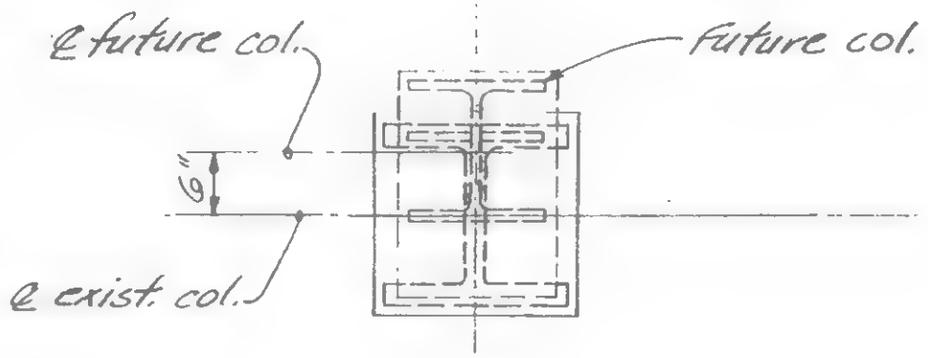

A

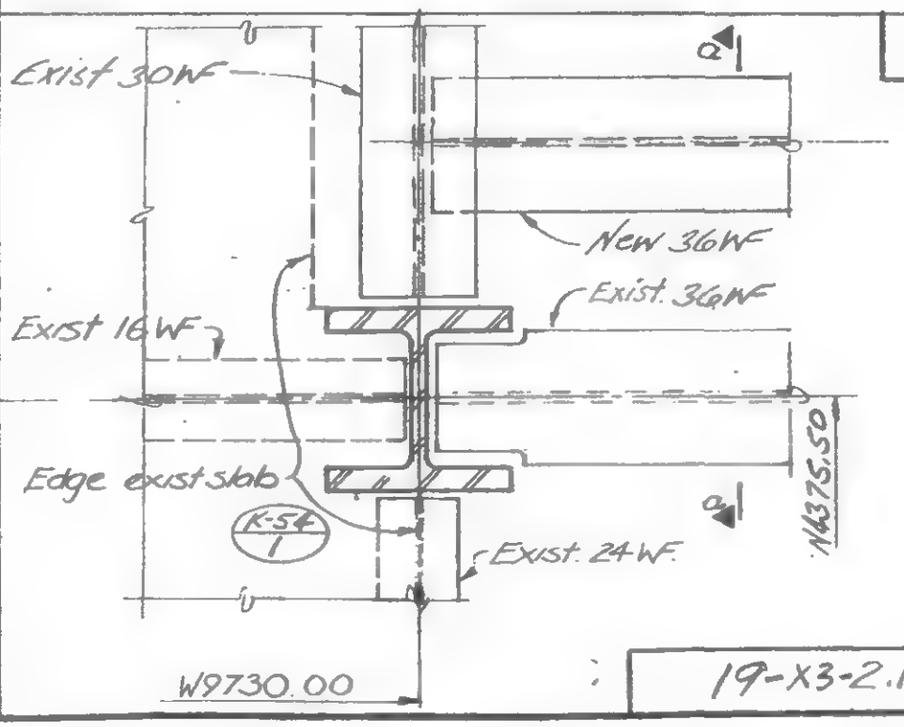

LICENSED PROFESSIONAL ENGINEER — LESLIE E. ROBERTSON — No. 34360 — UNIVERSITY OF THE STATE OF NEW YORK

DESIGNED D.S
DRAWN PO
REVIEWED H.R. WoaB

19-X3-2.1

SKILLING HELLE CHRISTIANSEN ROBERTSON — Structural & Civil Engineers

PROJECT: LIBERTY STREET BRIDGE WORLD TRADE CENTER - MODIFICATION

TITLE: NORTH SUPPORT

DATE: 6-29-73

REVISIONS

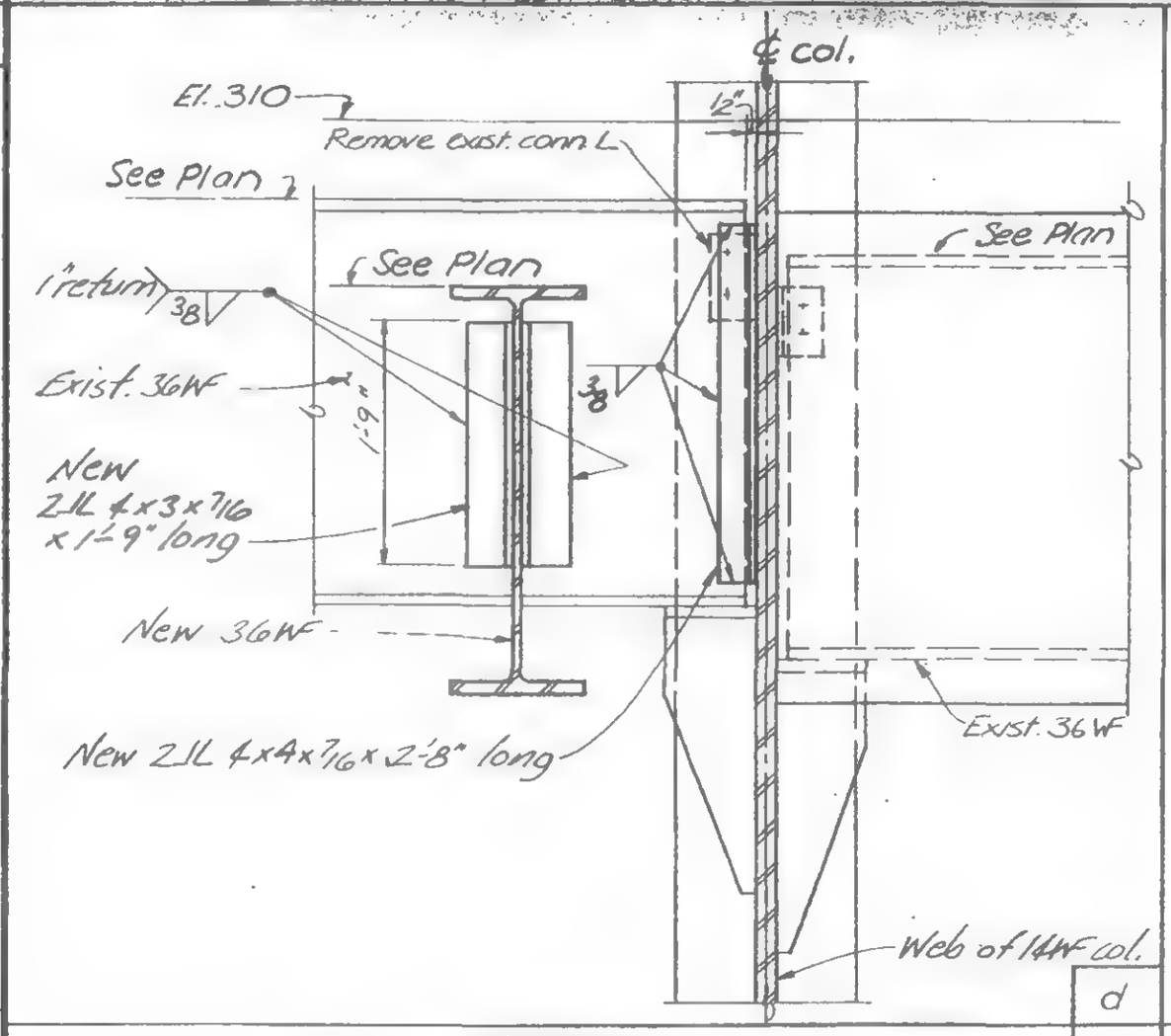

d

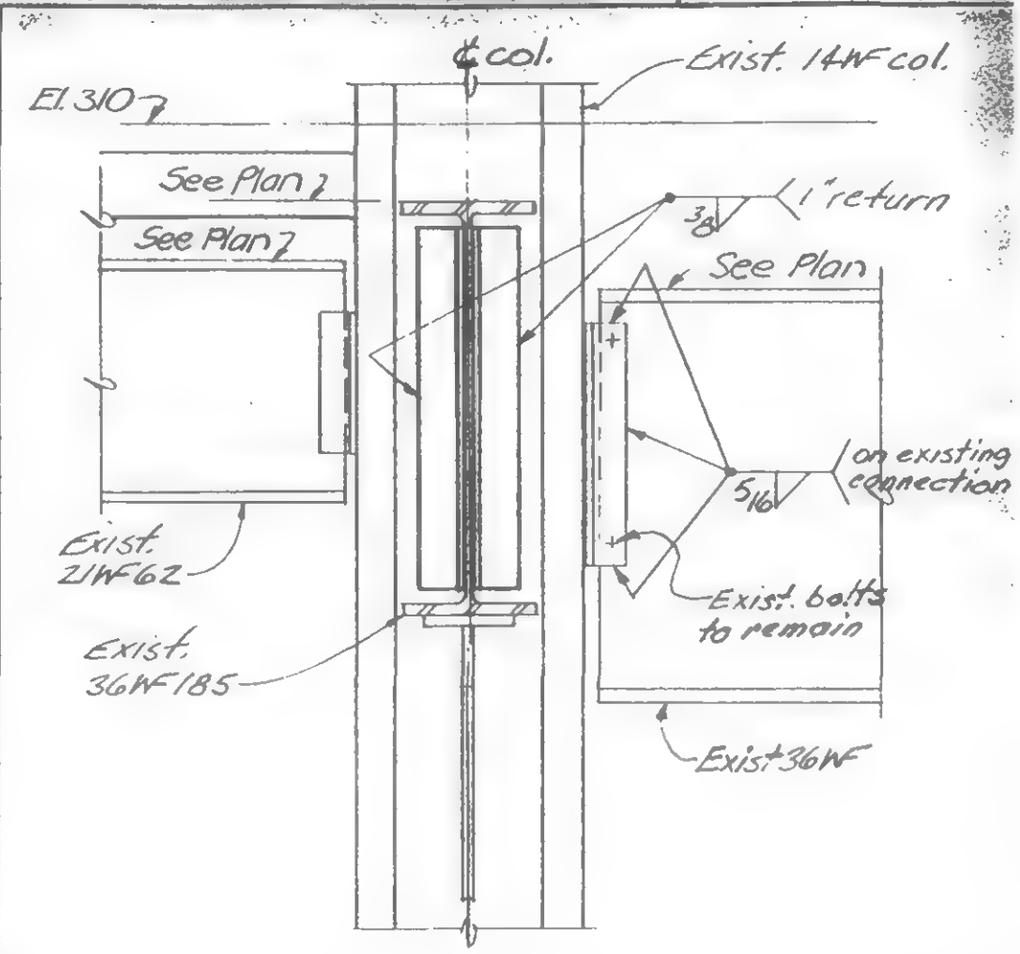

e

f

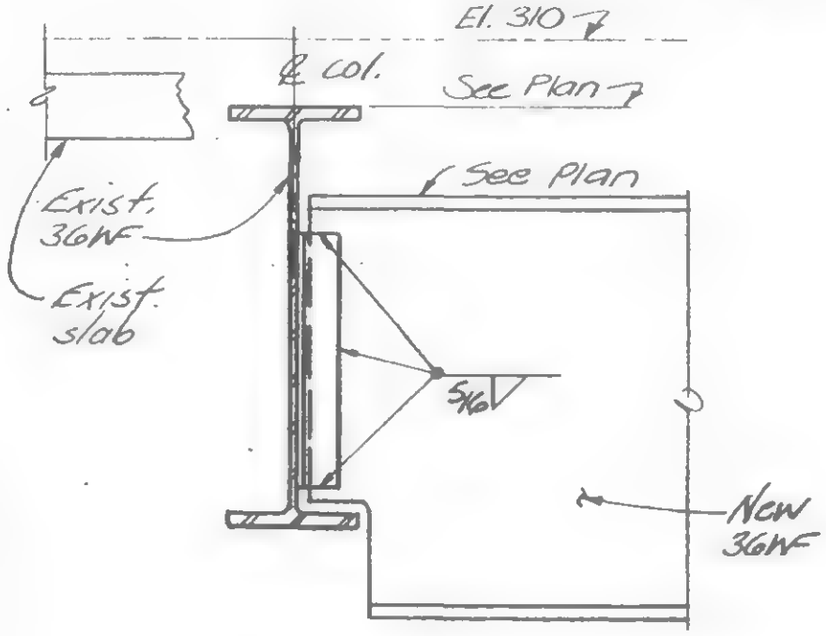

D

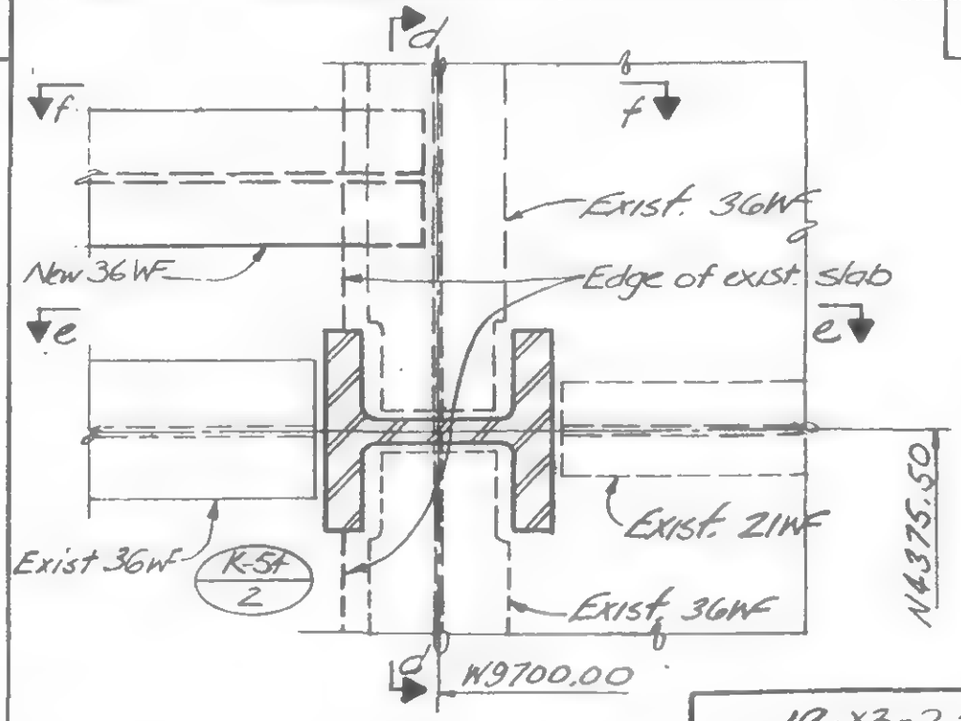

LICENSED PROFESSIONAL ENGINEER — LESLIE E. ROBERTSON — No 34360 — UNIVERSITY OF THE STATE OF NEW YORK

DESIGNED: DS

DRAWN: PO

REVIEWED: HR WEB

19-X3-2.2

SKILLING HELLE CHRISTIANSEN ROBERTSON — Structural & Civil Engineers

PROJECT: LIBERTY STREET BRIDGE
WORLD TRADE CENTER - MODIFICATION

TITLE: NORTH SUPPORT

DATE: 6-29-73

REVISIONS

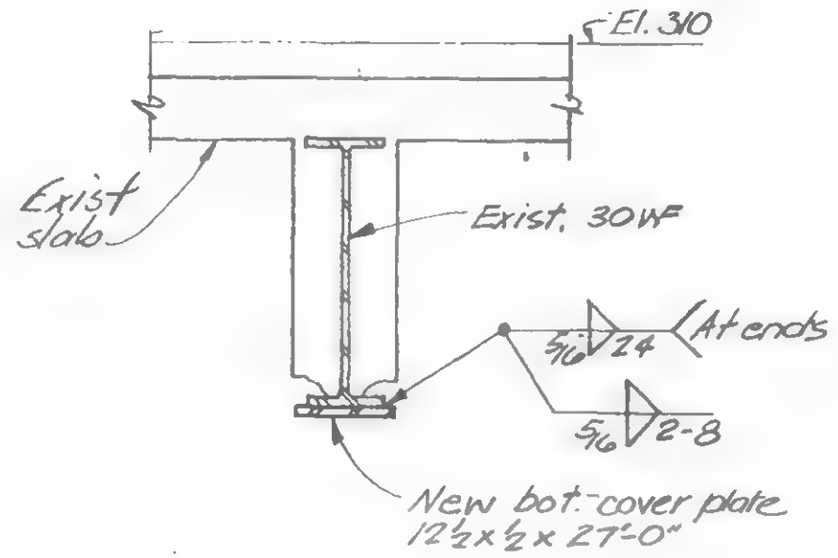

G

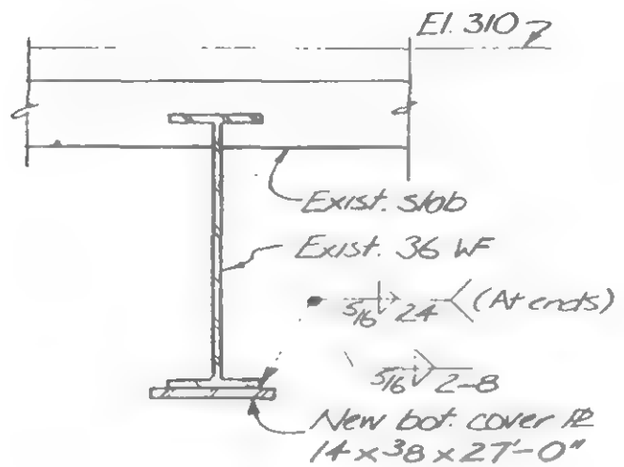

H

J

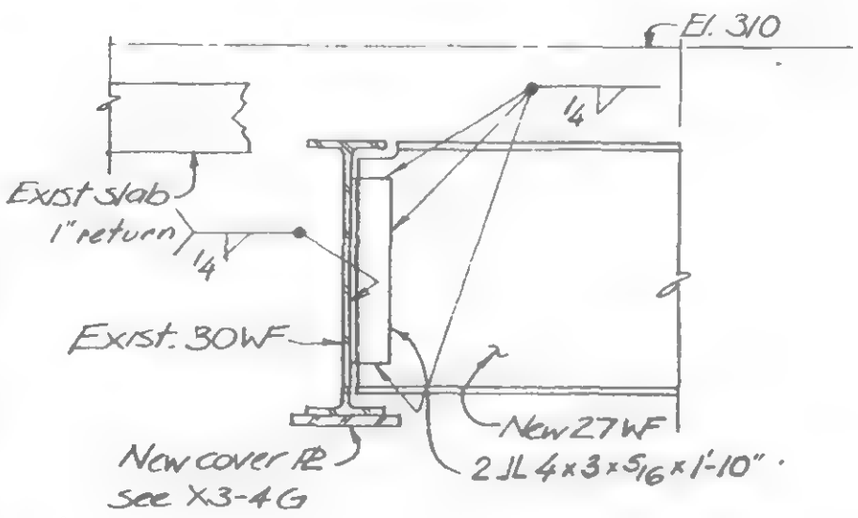

K

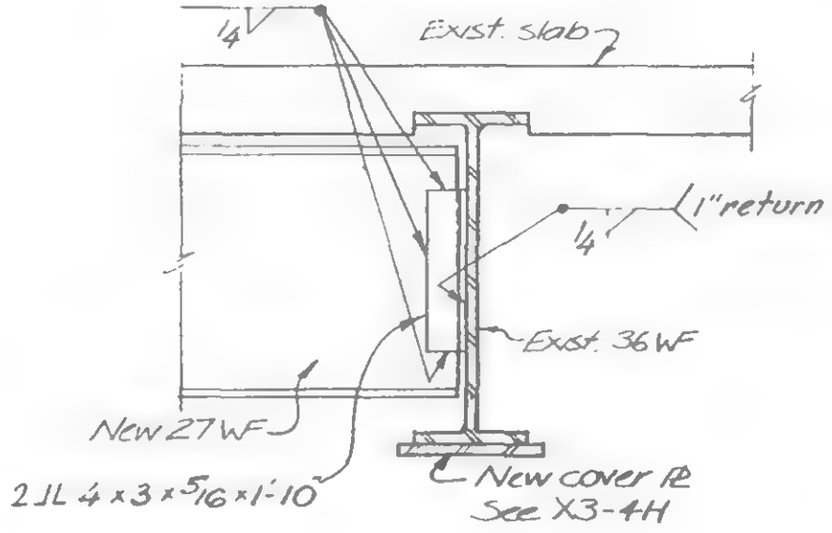

LICENSED PROFESSIONAL ENGINEER
LESLIE E. ROBERTSON
No 34360
UNIVERSITY OF THE STATE OF NEW YORK

SIGNED O.S.

DRAWN

REVIEWED HR. WAB

19-X3-2.3

SKILLING, HELLE, CHRISTIANSEN, ROBERTSON — Structural & Civil Engineers

PROJECT: LIBERTY STREET BRIDGE
WORLD TRADE CENTER - MODIFICATION

TITLE: NORTH SUPPORT

DATE: 6-29-73

REVISIONS

L

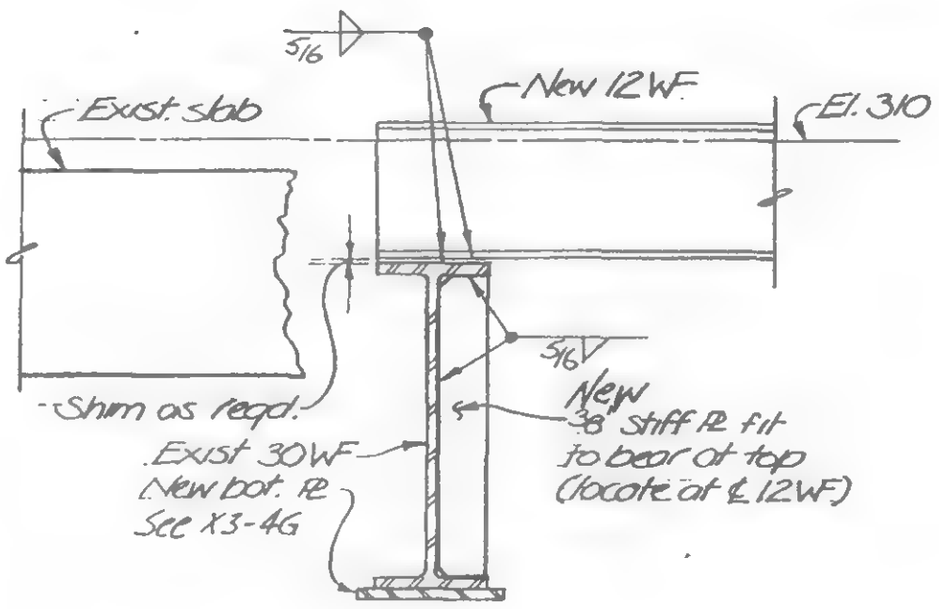

M

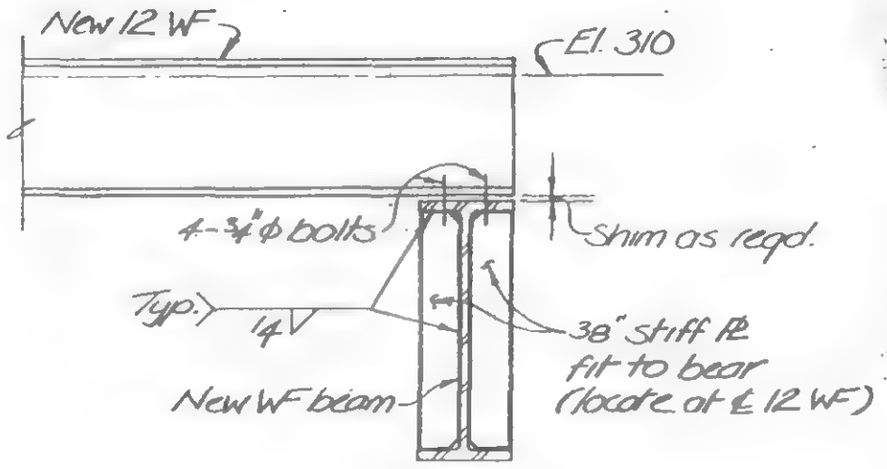

N

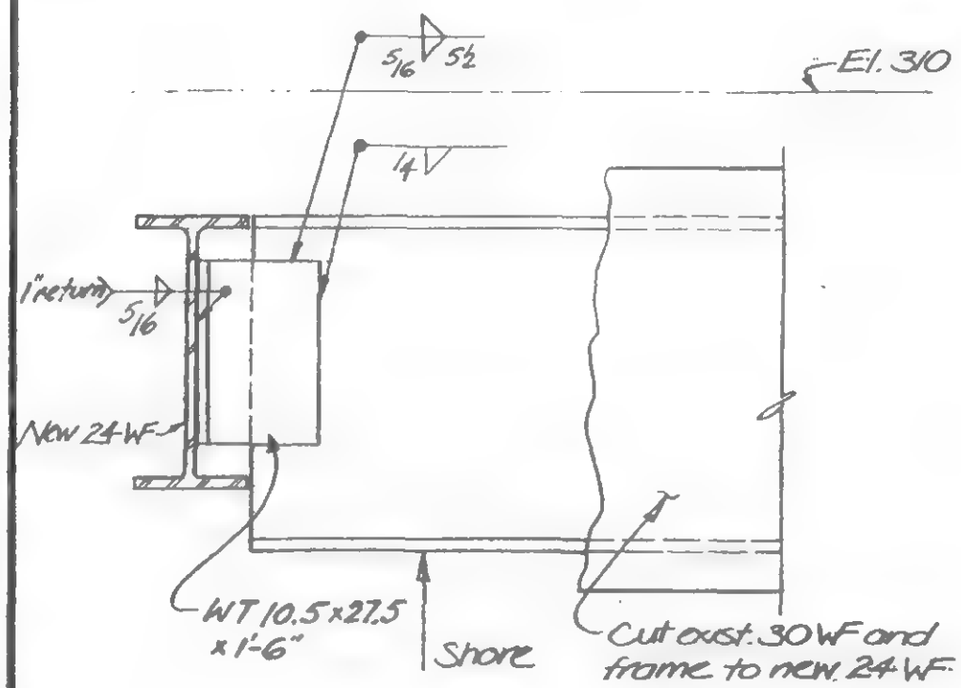

P

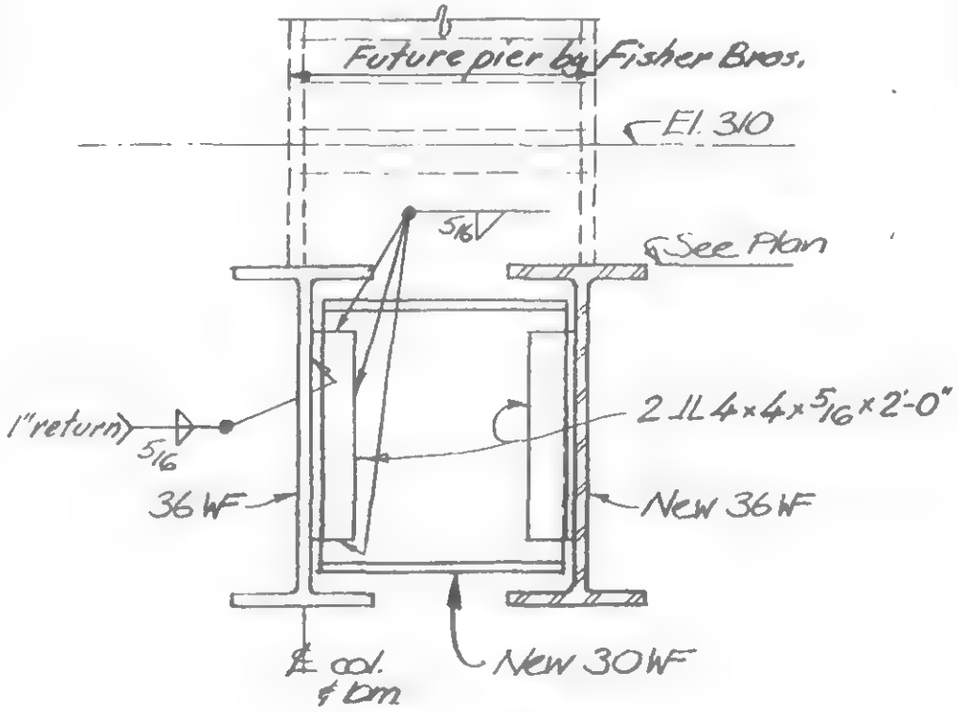

Section P-P

LICENSED PROFESSIONAL ENGINEER
LESLIE E. ROBERTSON
No. 34300
UNIVERSITY OF THE STATE OF NEW YORK

DESIGNED DS
DRAWN JA
REVIEWED HR. WOB

19-X3-2.4

SKILLING HELLE CHRISTIANSEN ROBERTSON Structural & Civil Engineers

PROJECT: LIBERTY STREET BRIDGE WORLD TRADE CENTER - MODIFICATION

TITLE: CENTER PIER SUPPORT

DATE: 6-29-73

REVISIONS

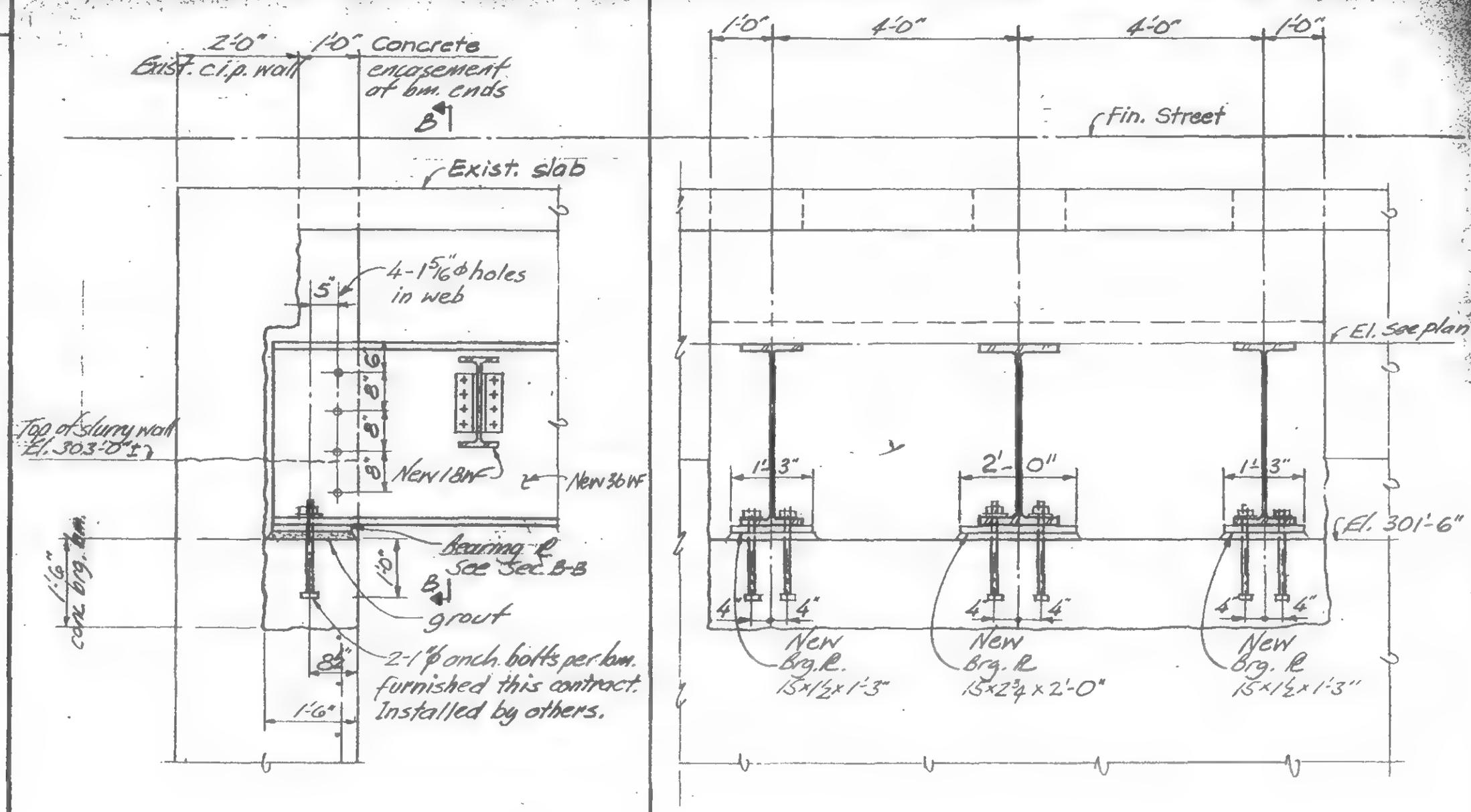

LICENSED PROFESSIONAL ENGINEER LESLIE E. ROBERTSON No. 34360 UNIVERSITY OF THE STATE OF NEW YORK

DESIGNED DS

DRAWN JA

REVIEWED HR WAB

A B

19-X3-3.1

PROJECT LIBERTY STREET BRIDGE
WORLD TRADE CENTER - MODIFICATION

TITLE CENTER PIER SUPPORT

DATE 6-29-73

REVISIONS

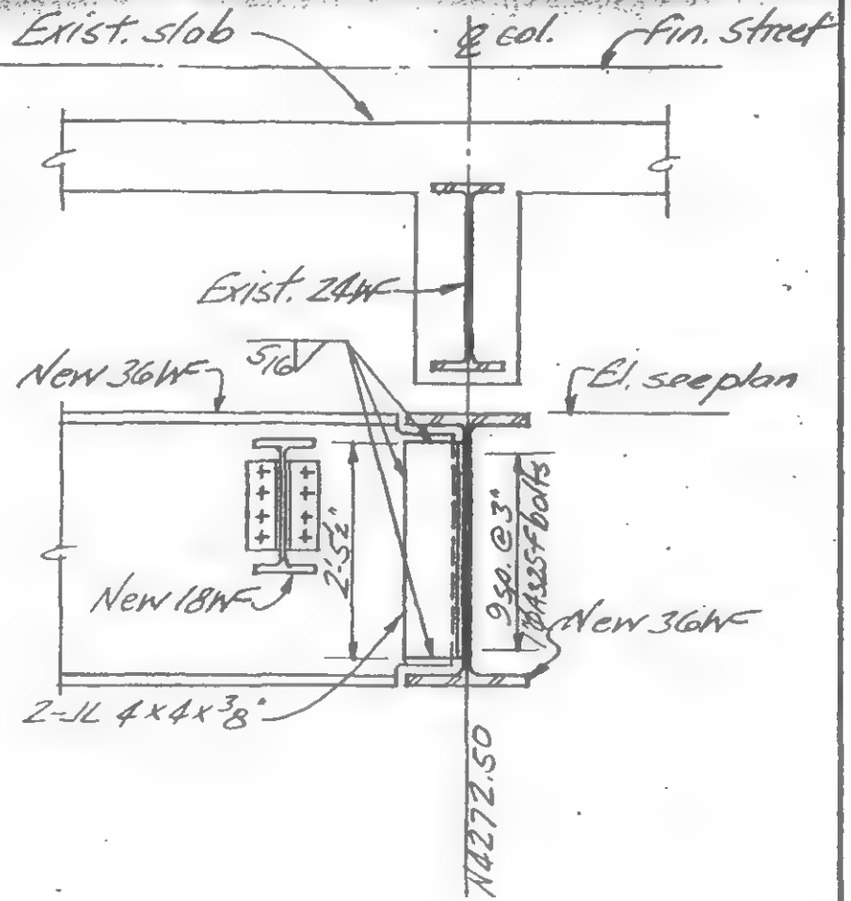

LICENSED PROFESSIONAL ENGINEER
LESLIE E. ROBERTSON
No 34960
REGISTERED TO PRACTICE IN THE STATE OF NEW YORK

DESIGNED
DRAWN JB
REVIEWED

C

19-X3-3.2

Structural & Civil Engineers

PROJECT: LIBERTY STREET BRIDGE WORLD TRADE CENTER MODIFICATIONS

TITLE: CENTER PIER SUPPORT

DATE: 6-29-73

REVISIONS

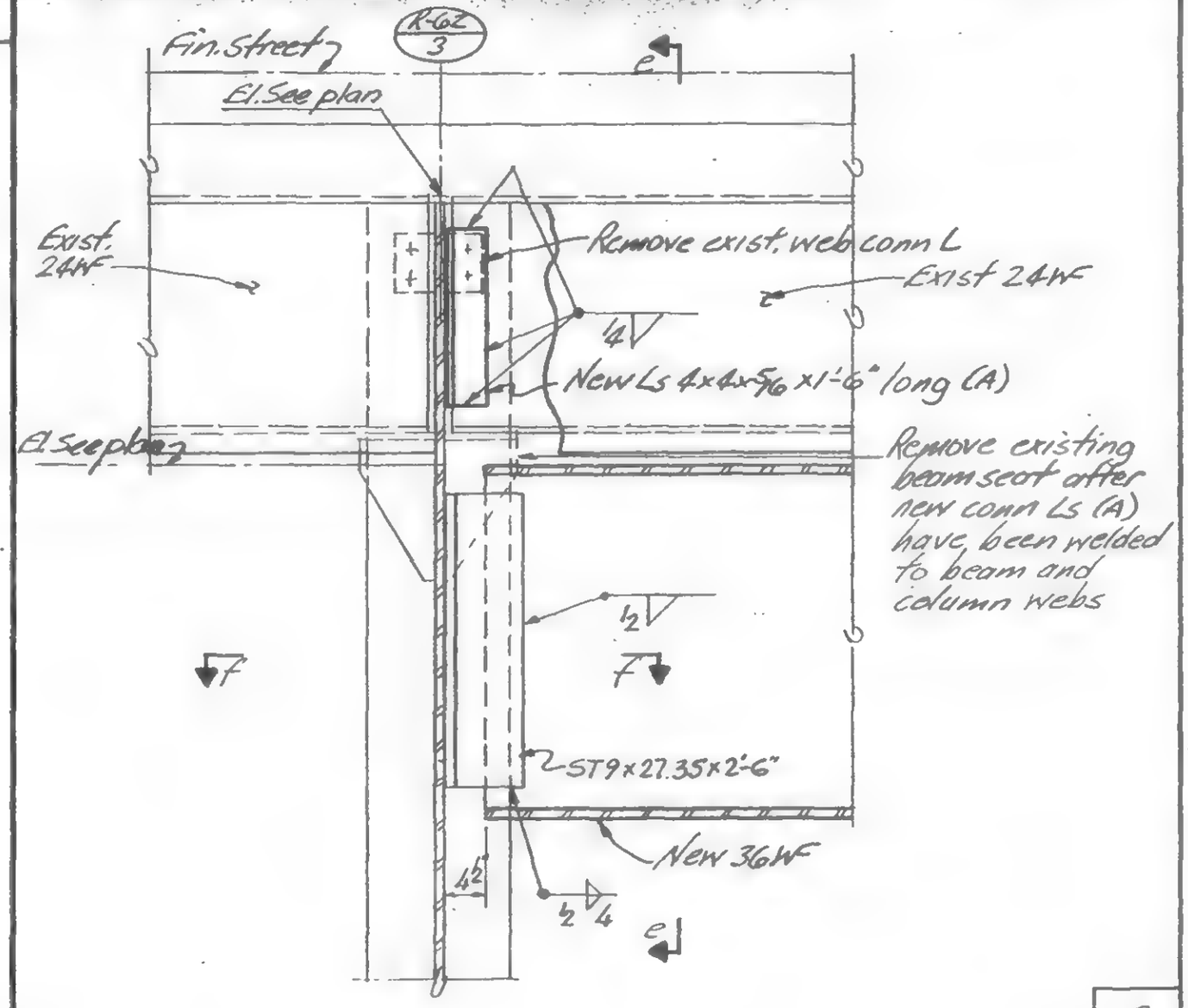

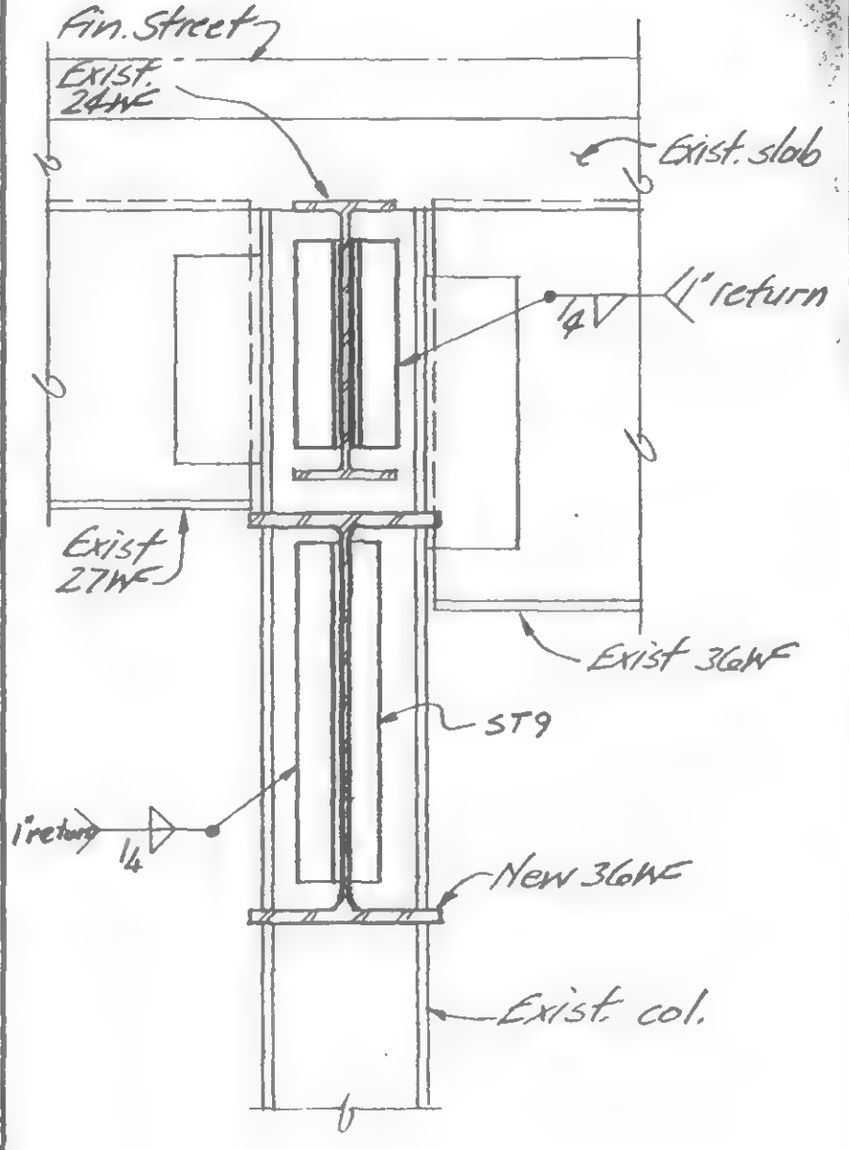

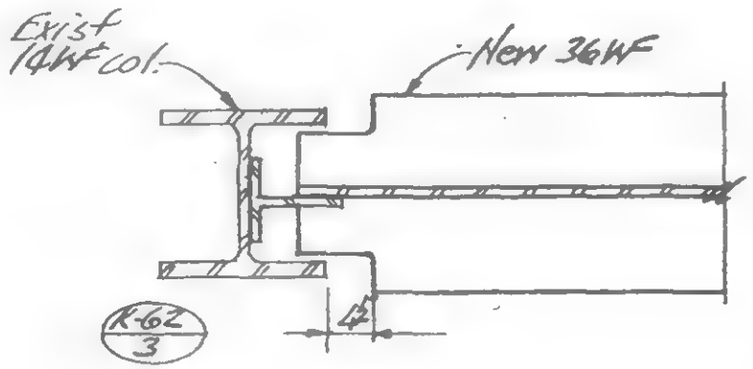

E

f

e

19-X3-3.3

LICENSED PROFESSIONAL ENGINEER
LESLIE E. ROBERTSON
No. 34360
UNIVERSITY OF THE STATE OF NEW YORK

DESIGNED DS

DRAWN JB

REVIEWED HR, LEB

SKIDDING, HELLE, CHRISTIANSEN — Structural & Civil Engineers

PROJECT: LIBERTY STREET BRIDGE WORLD TRADE CENTER - MODIFICATION

CENTER PIER SUPPORT

DATE: 6-29-73

REVISIONS

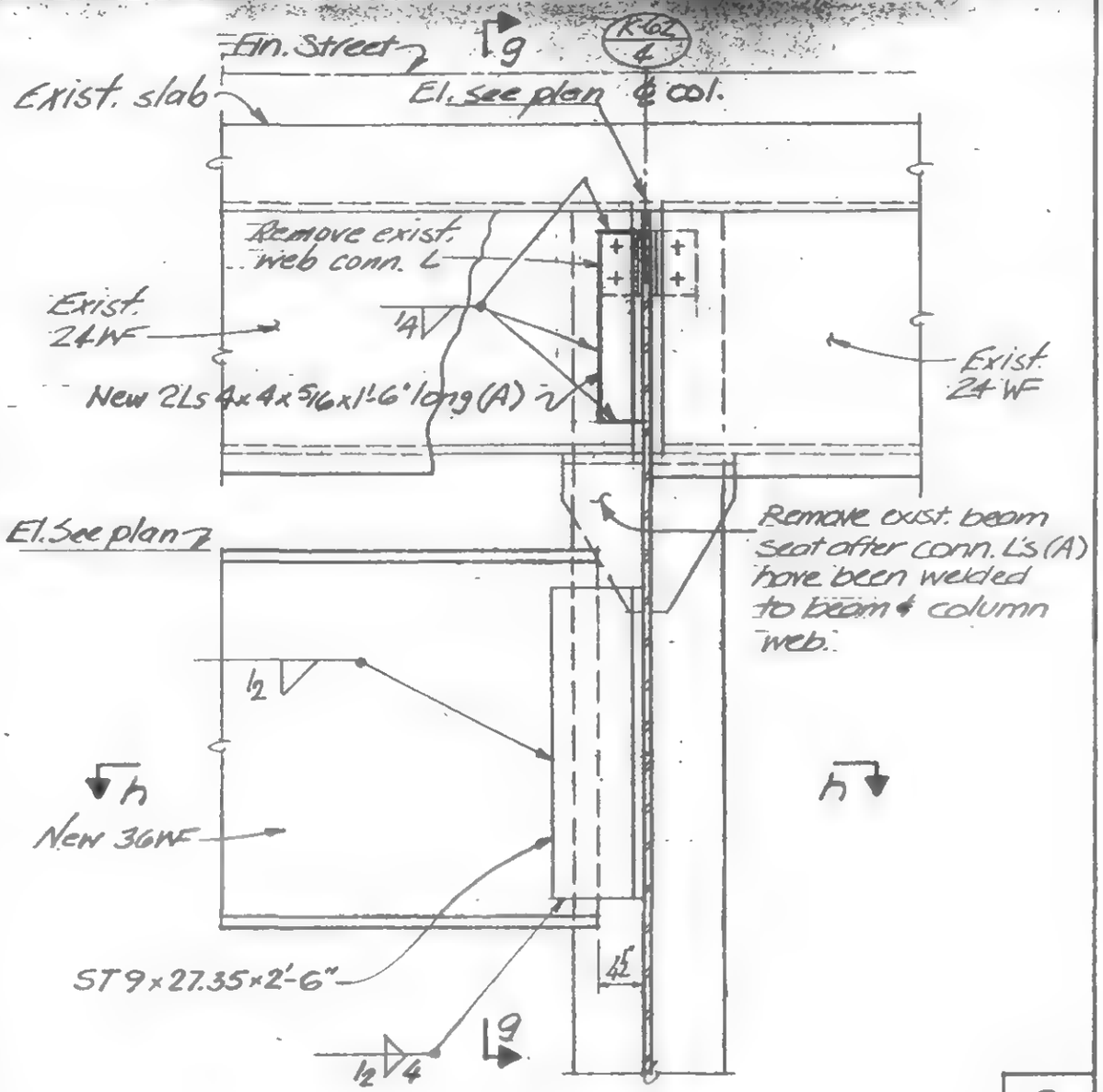

G

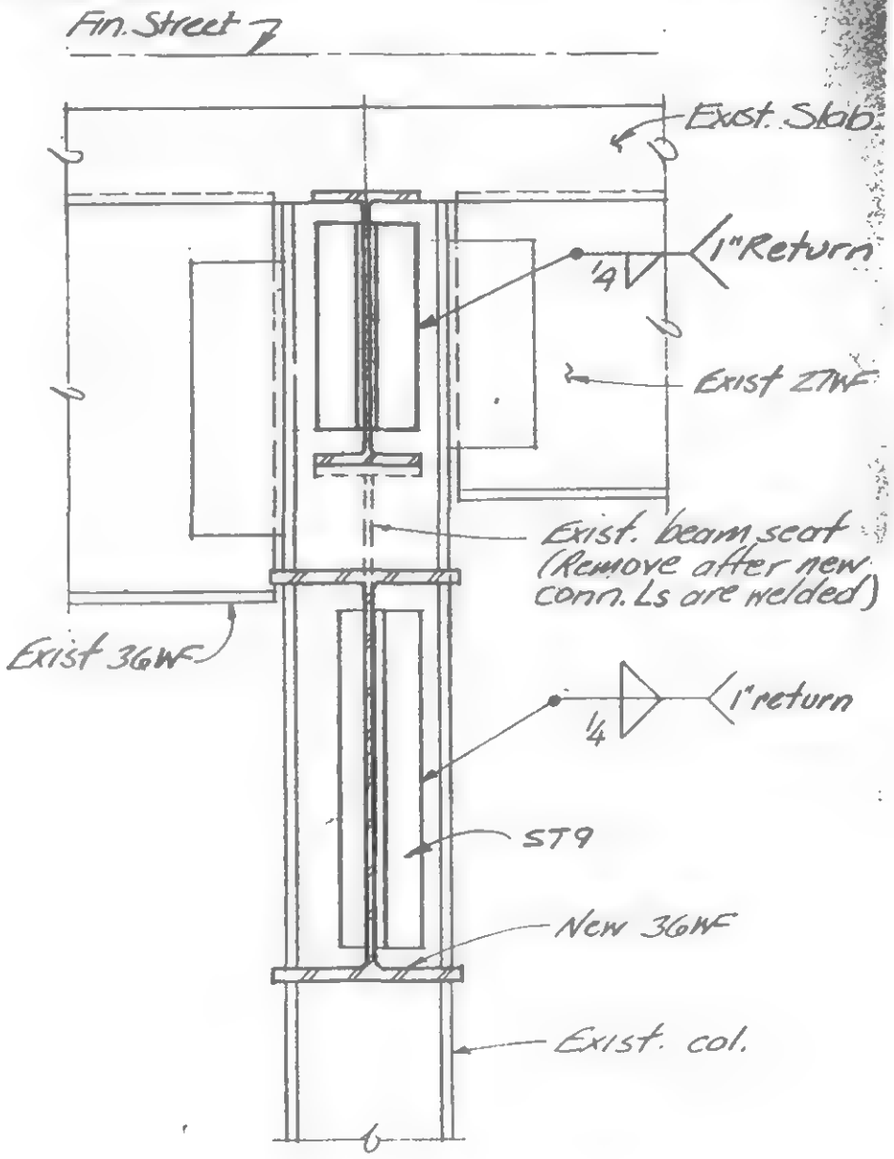

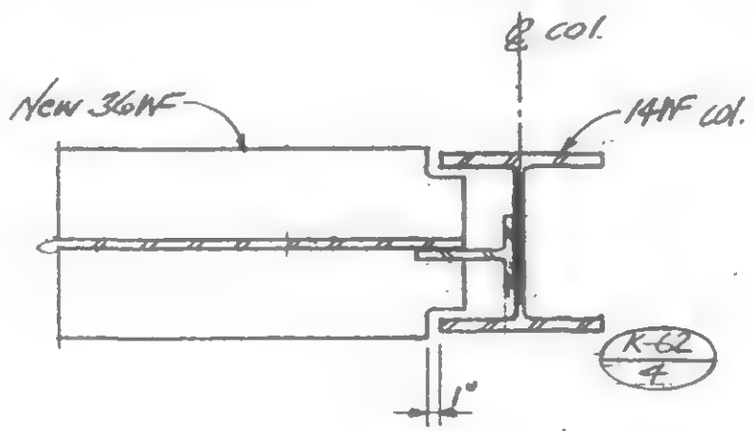

h

g

LICENSED PROFESSIONAL ENGINEER
LESLIE E. ROBERTSON
No. 34360
UNIVERSITY OF THE STATE OF NEW YORK

DESIGNED DS

DRAWN JB

REVIEWED HR. WAB

19-X3-3A

SKILLING HELLE

PROJECT: LIBERTY STREET BRIDGE
WORLD TRADE CENTER MODIFICATION

TITLE: OUTER PIER SUPPORT

DATE: 6-29-73

REVISIONS

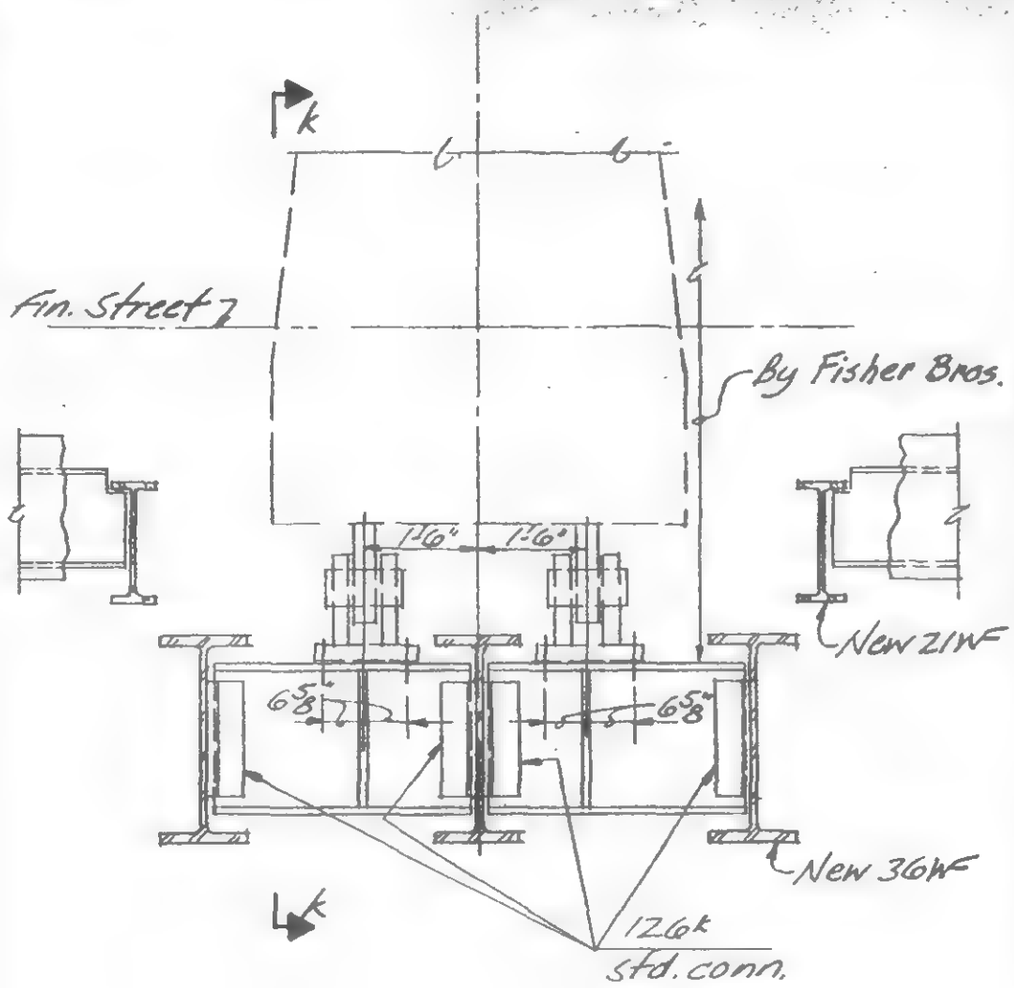

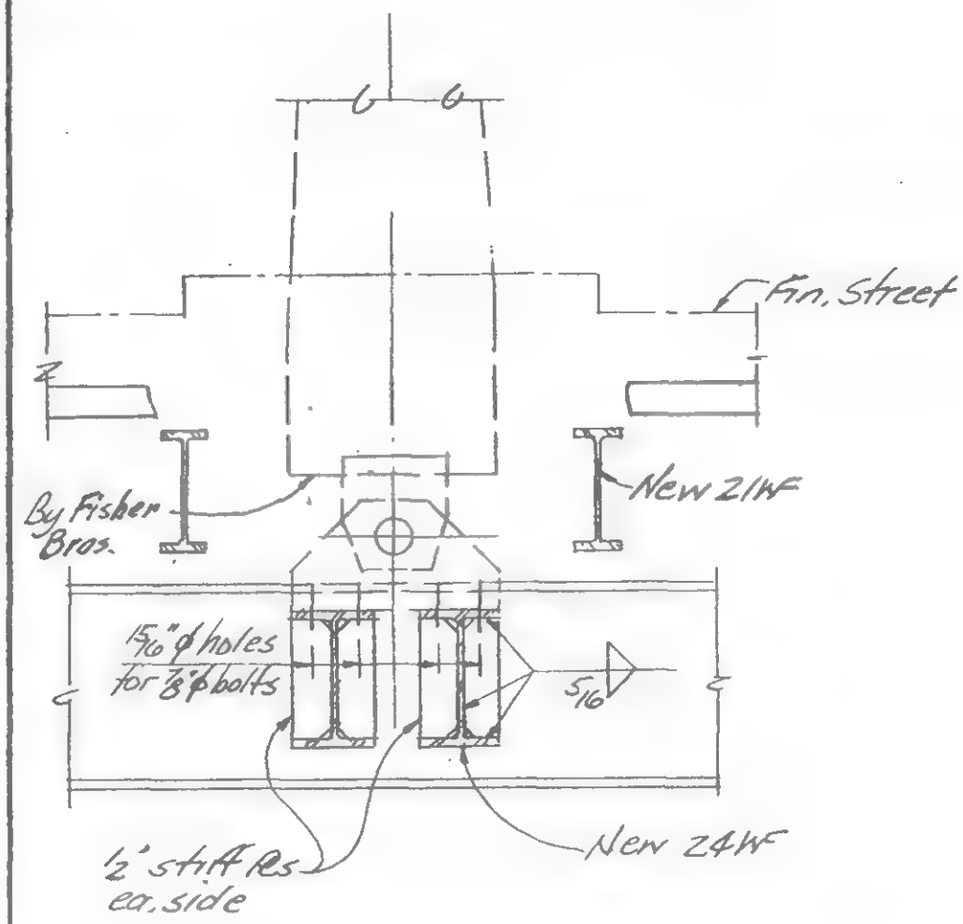

LICENSED PROFESSIONAL ENGINEER
LESLIE E. ROBERTSON
No 34360
UNIVERSITY OF THE STATE OF NEW YORK

SIGNED
OS

DRAWN
TR

REVIEWED
HR, WOB

K

k

19-X3-3.5

REVISIONS

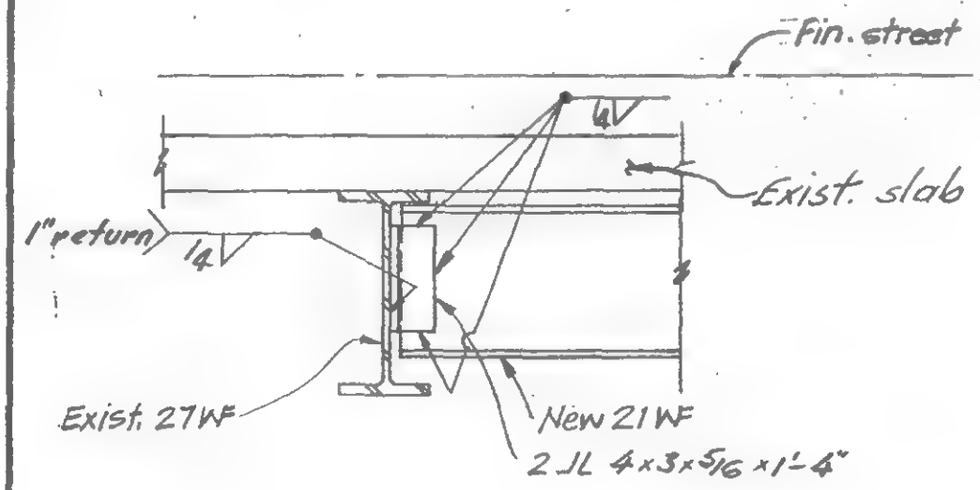

L

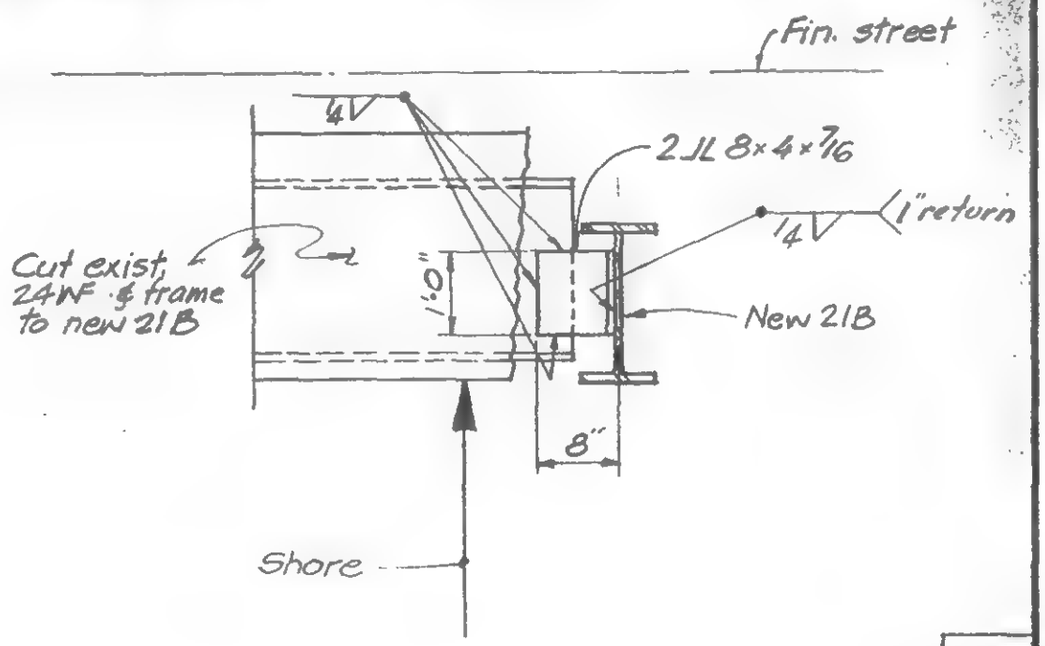

M

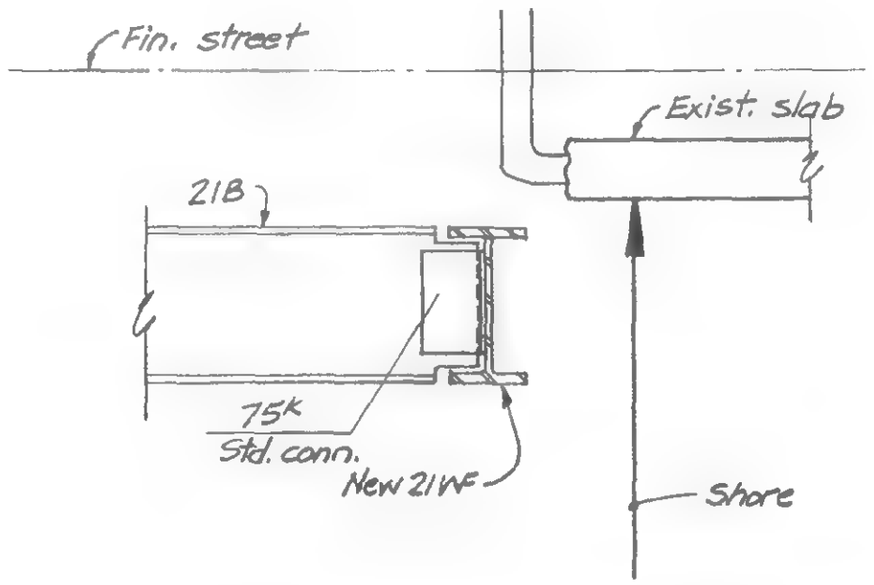

N

LICENSED PROFESSIONAL ENGINEER
LESLIE E. ROBERTSON
No 34360
UNIVERSITY OF THE STATE OF NEW YORK

DESIGNED WAB
DRAWN
REVIEWED HR, WAB

19-X3-3.6

PROJECT: LIBERTY STREET BRIDGE WORLD TRADE CENTER - MODIFICATION | INDEX & GENERAL NOTES | DATE: 6-27-73

Index

19-X4-1	Index & General Notes	
19-X4-2.1	Details	at North Support.
2.2	Details	at North Support.
2.3	Details	at North Support.
2.4	Details	at North Support.
19-X4-3.1	Details	at Center Support.
3.2	Details	at Center Support.
3.3	Details	at Center Support.

General Notes - Concrete

1. All construction shall be in accordance with Basic Project Specifications.
2. See SCK-102 for framing Plan at North and Center Supports.
3. Remove existing concrete without damage to existing reinforcing.
4. Clean face of existing concrete and thoroughly coat entire surface with approved epoxy bonding compound prior to casting new concrete.
5. New concrete shall be approved "non-shrink," f'_c = 4000 psi stone aggregate concrete.

LICENSED PROFESSIONAL ENGINEER — LEMUEL E. ROBERTSON — No. 34360 — STATE OF NEW YORK

DESIGNED WAB
DRAWN
REVIEWED

19-X4-1

PROJECT: LIBERTY STREET BRIDGE
WORLD TRADE CENTER MODIFICATION

TITLE: DETAILS AT NORTH SUPPORT

DATE: 6-29-78

REVISIONS

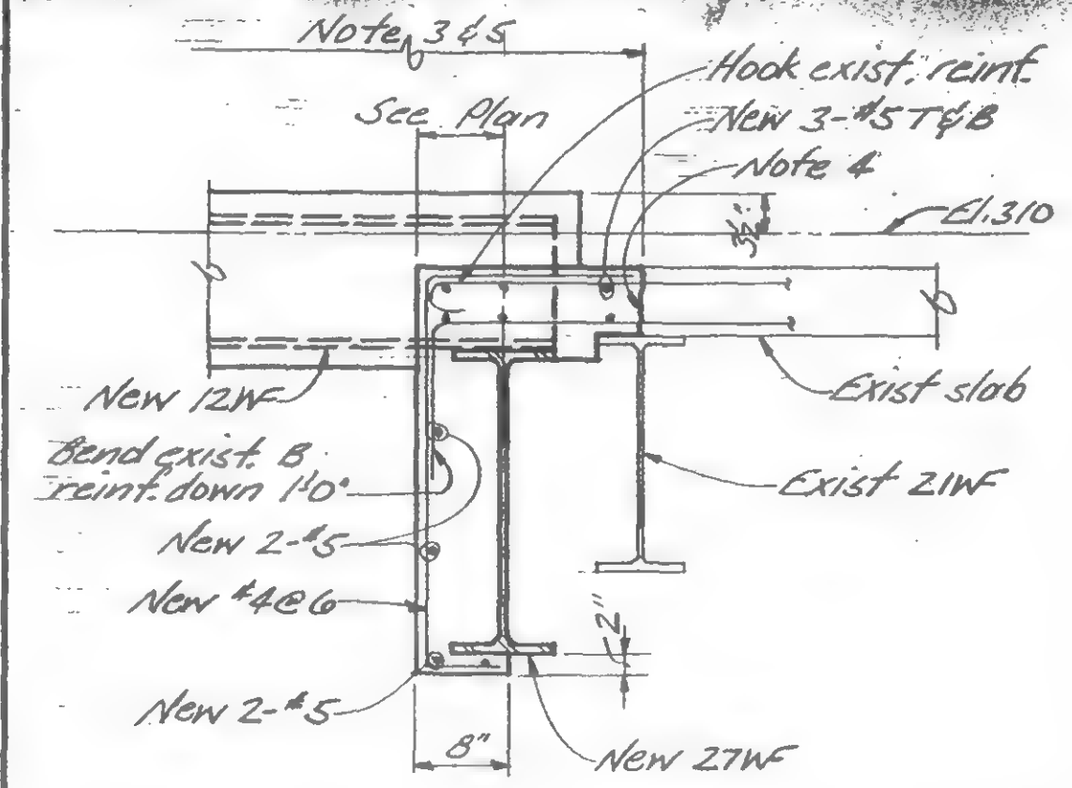

A

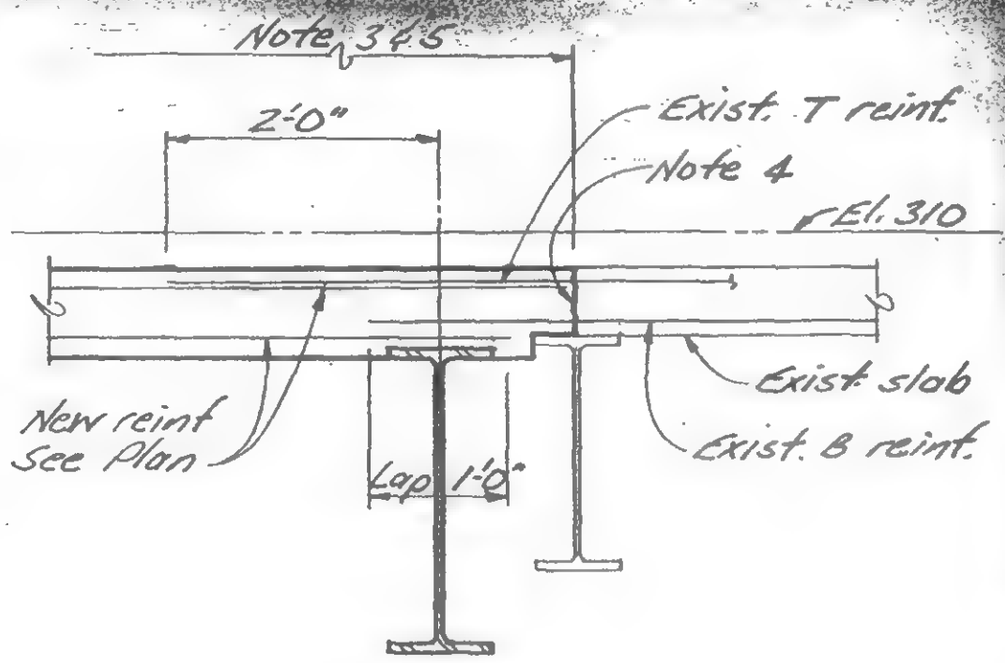

B

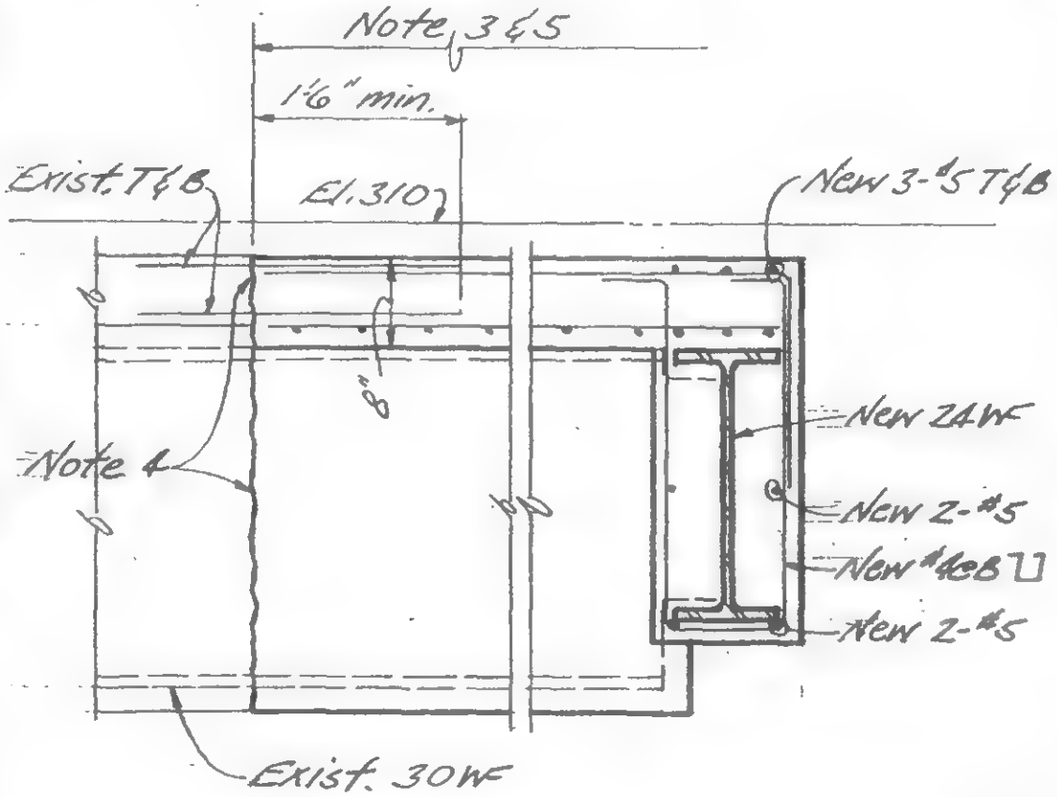

C

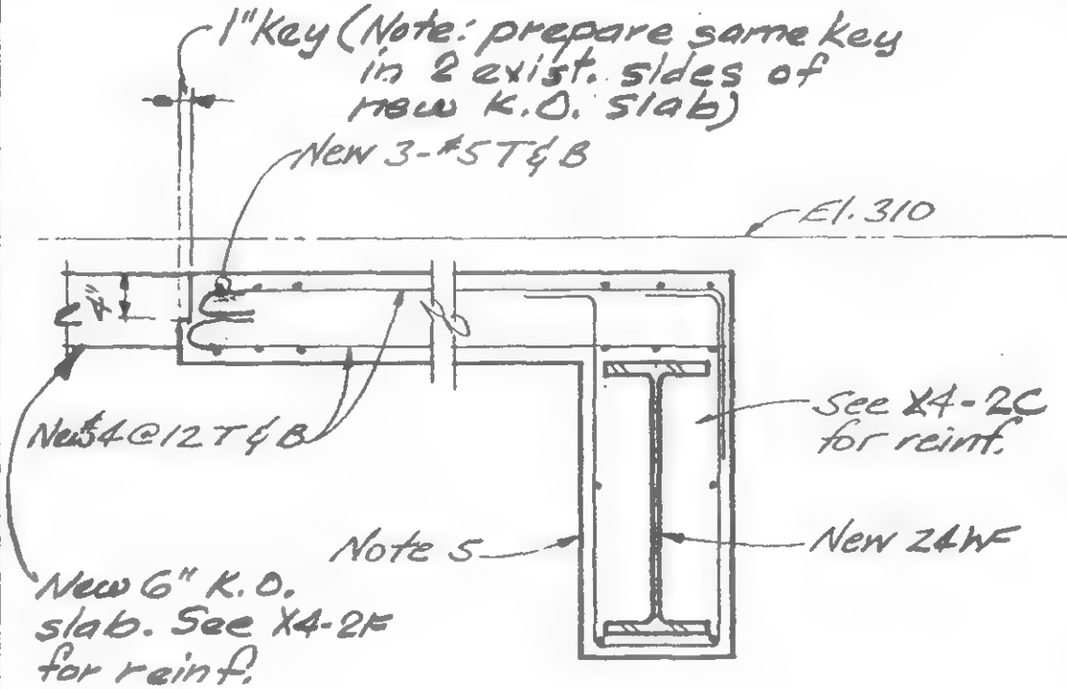

D

LICENSED PROFESSIONAL ENGINEER
LESLIE E. ROBERTSON
No. 34360
UNIVERSITY OF THE STATE OF NEW YORK

DRAWN
J. Adams
REVIEWED
WAB

19-X4-2.1

PROJECT: LIBERTY STREET BRIDGE
WORLD TRADE CENTER MODIFICATION

TITLE: DETAILS AT NORTH SUPPORT

DATE: 6-29-73

REVISIONS

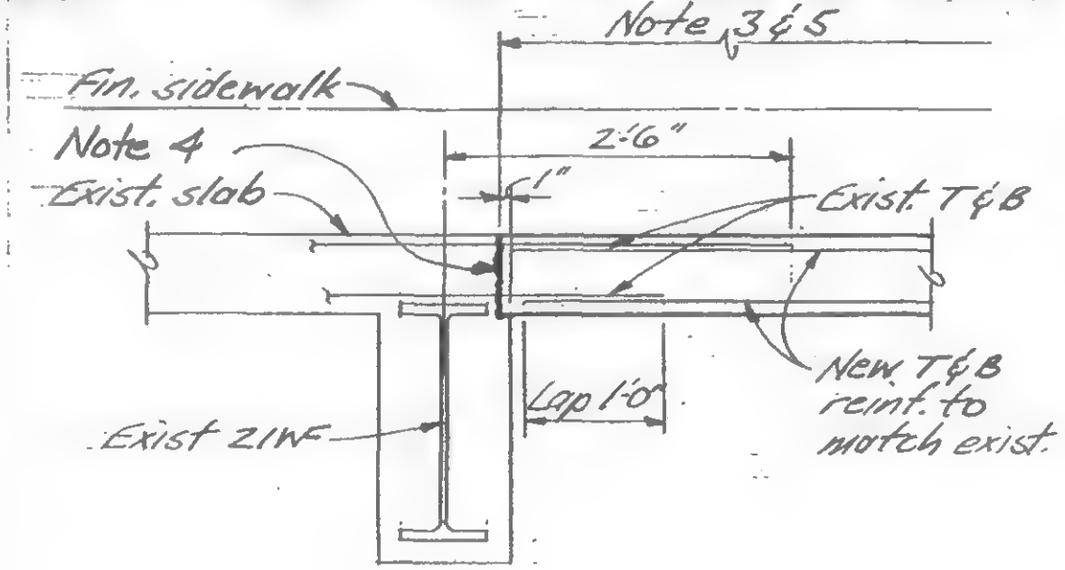

E

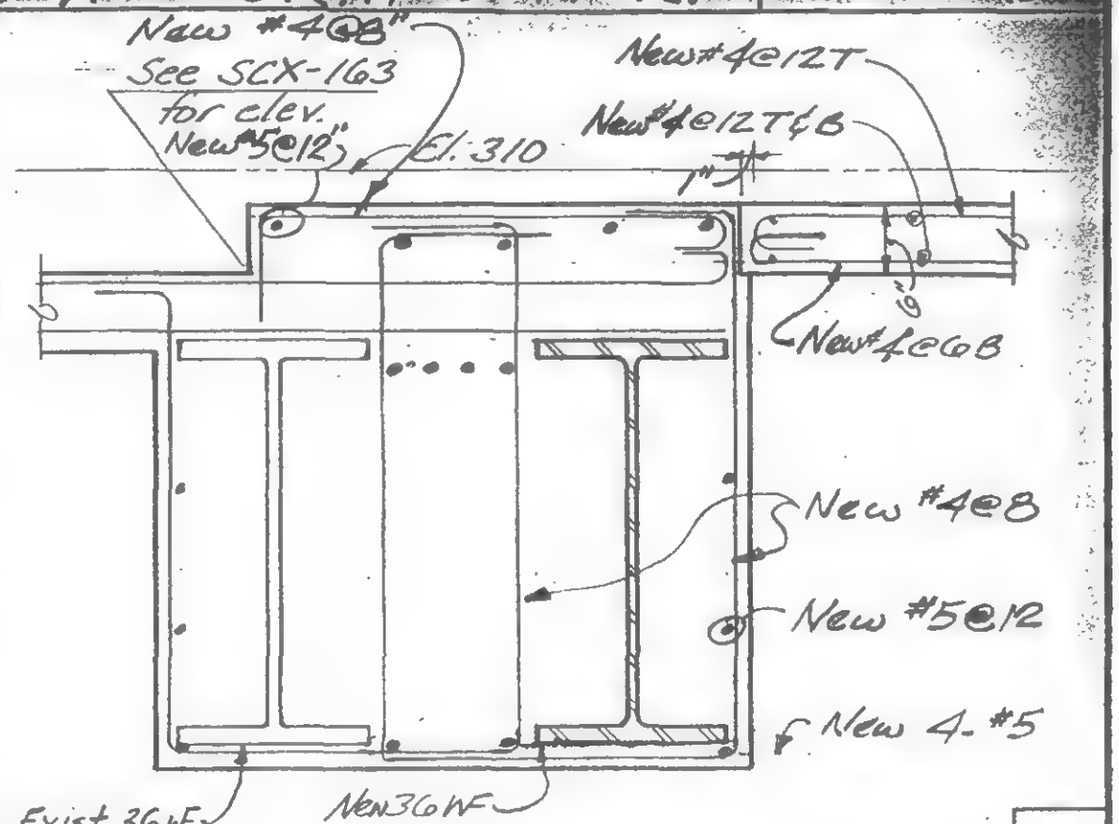

F

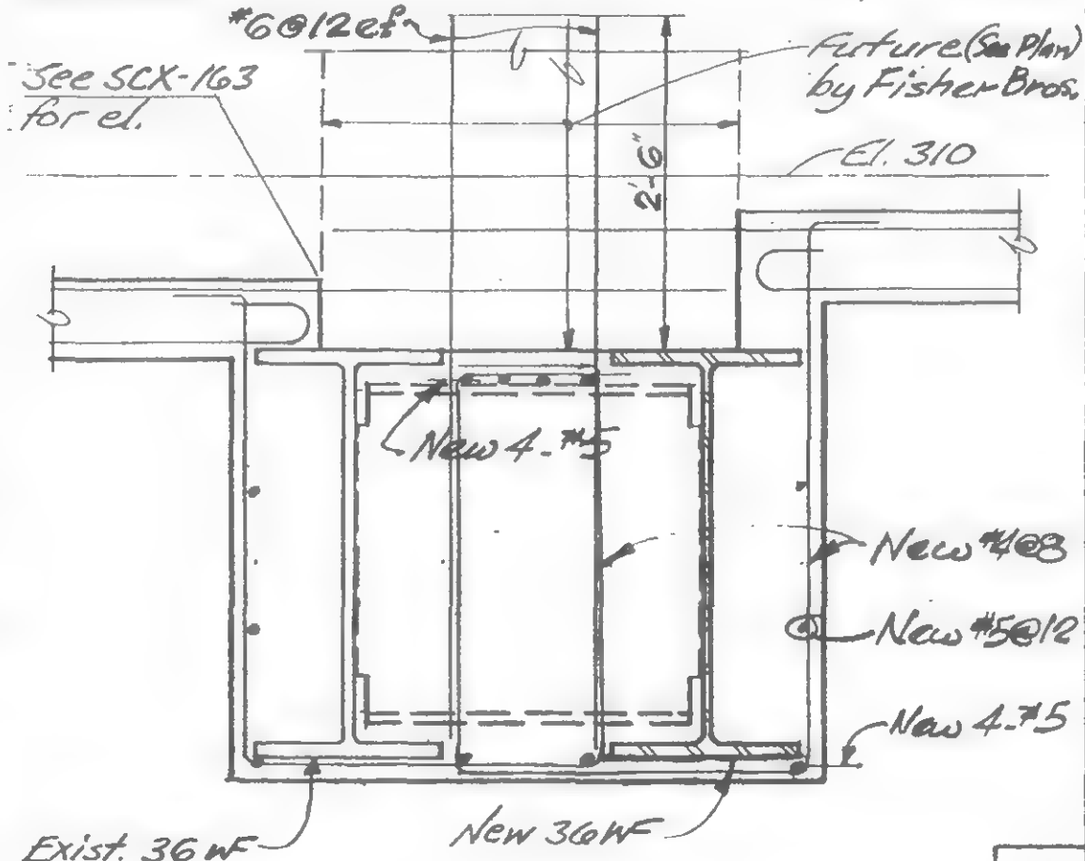

G

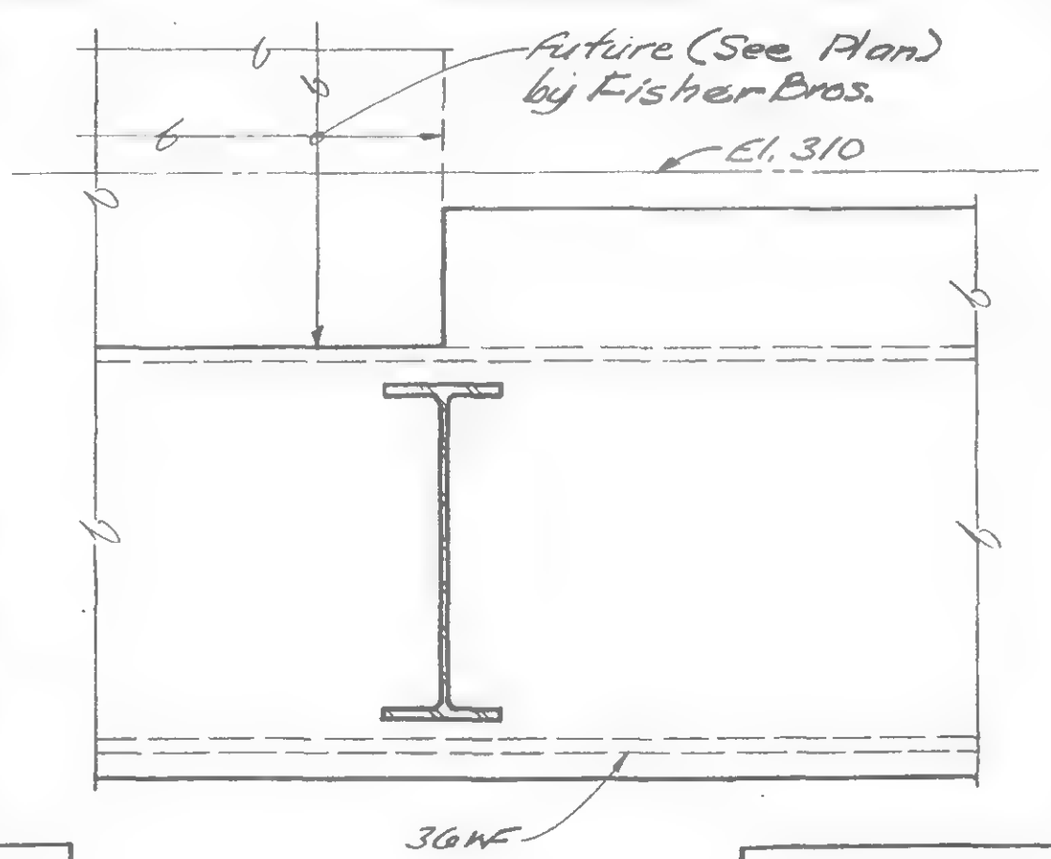

H

LICENSED PROFESSIONAL ENGINEER
LESLIE E. ROBERTSON
No 34360
UNIVERSITY OF THE STATE OF NEW YORK

SIGNED

DRAWN J. Adams

REVIEWED WOB

19-X4-2.2

PROJECT: LIBERTY STREET BRIDGE WORLD TRADE CENTER MODIFICATION

TITLE: DETAILS AT NORTH SUPPORT

DATE: 6-29-73

REVISIONS

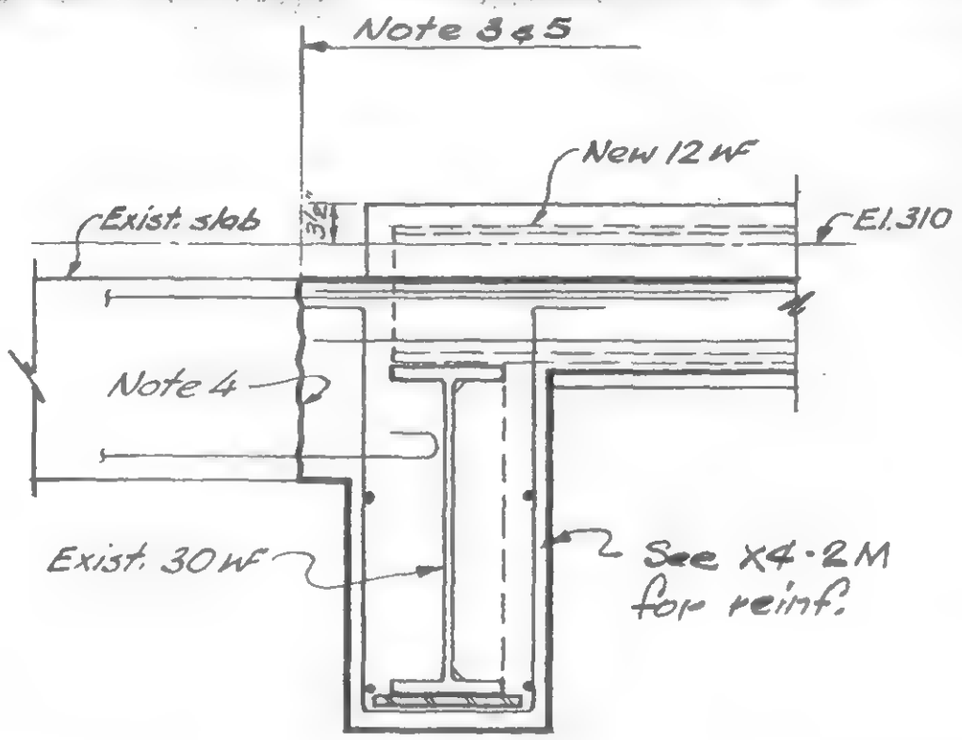

K

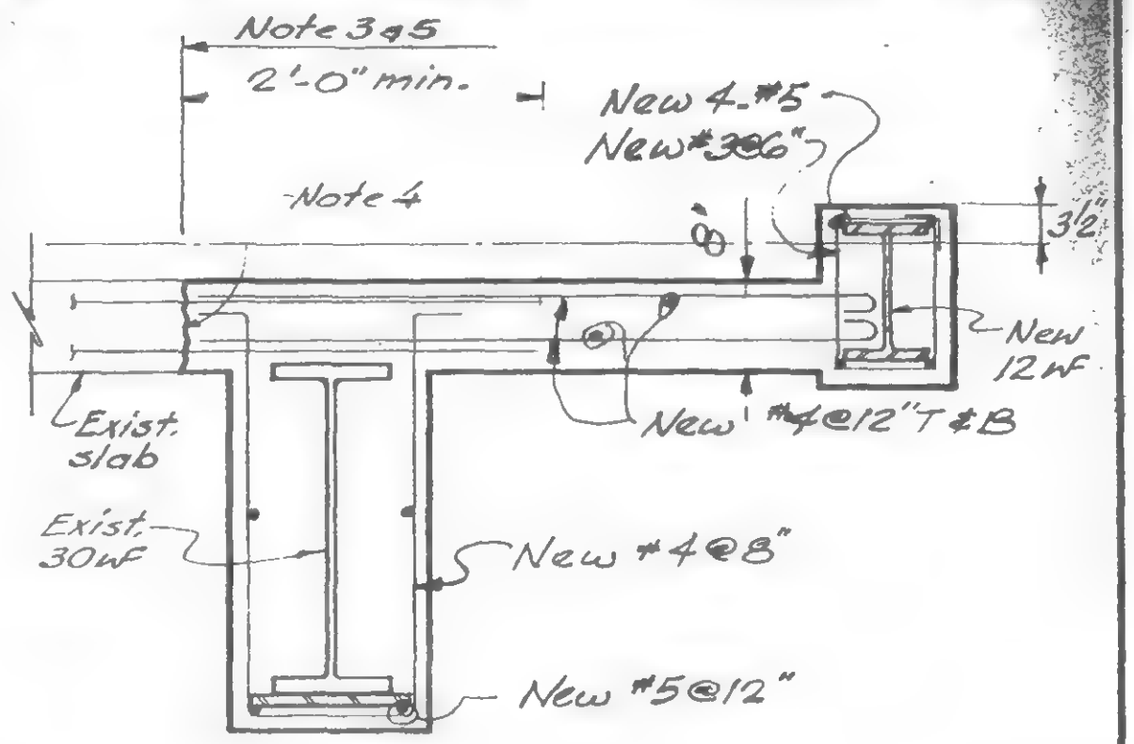

M

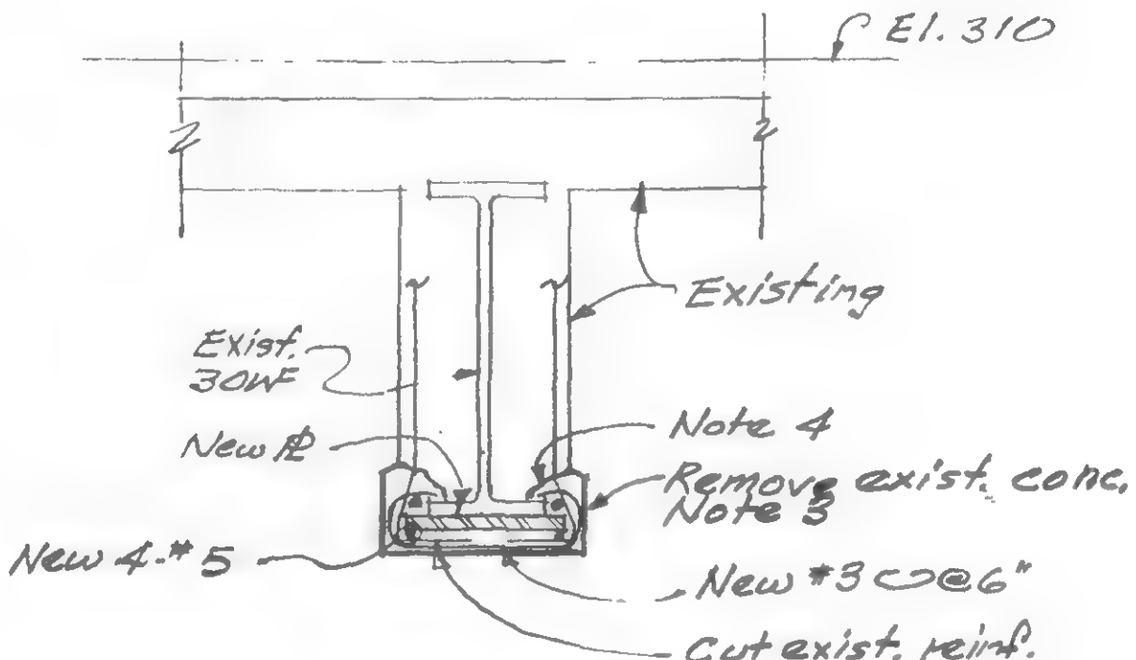

N

LICENSED PROFESSIONAL ENGINEER
LESLIE E. ROBERTSON
No 34360
UNIVERSITY OF THE STATE OF NEW YORK

SIGNED

DRAWN John Gricus

REVISED WAB

19-X4-2.3

PROJECT: ALBERT STREET BRIDGE
WORLD TRADE CENTER MODIFICATION

DETAILS AT NORTH SUPPORT

DATE: 6-29-73

REVISIONS

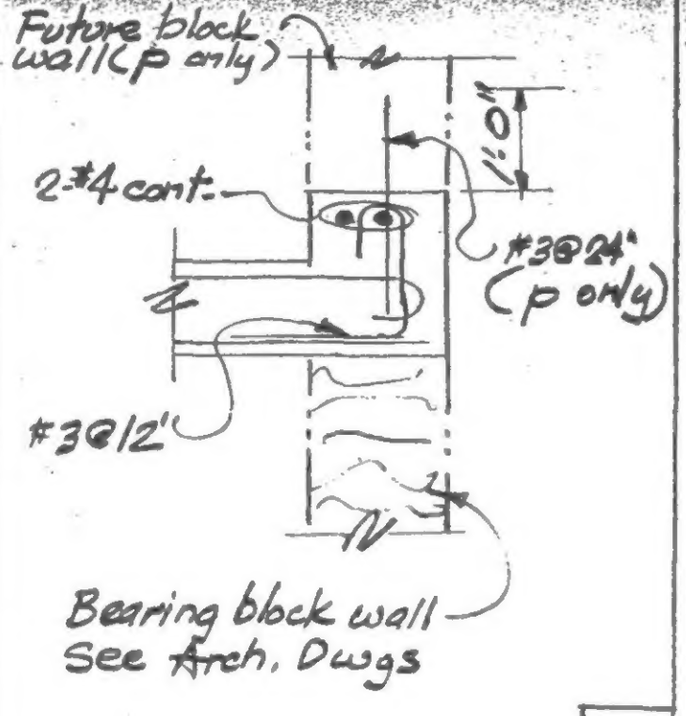

P
Q

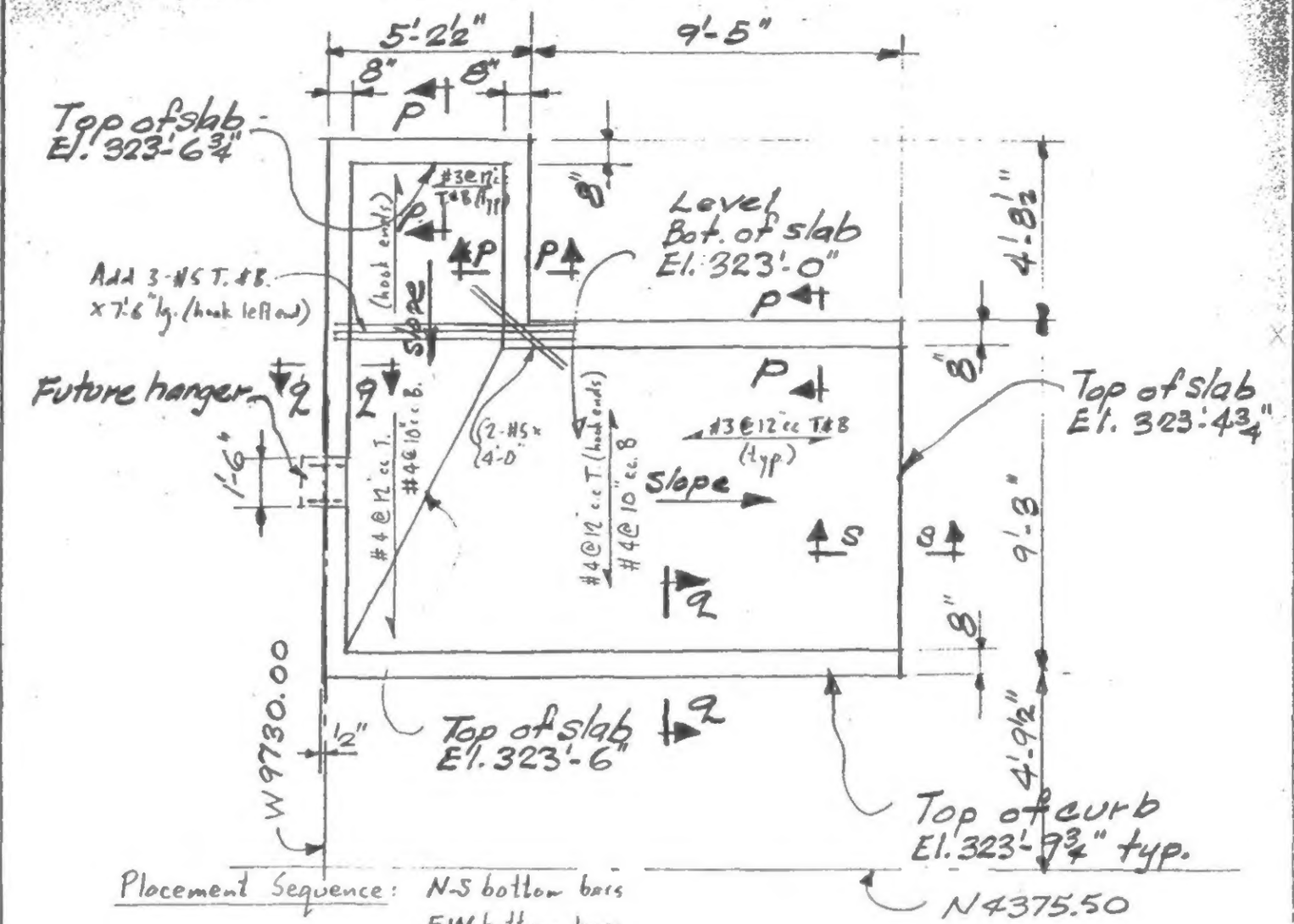

Placement Sequence:
N-S bottom bars
E-W bottom bars
diagonal bars
E-W top bars
N-S top bars

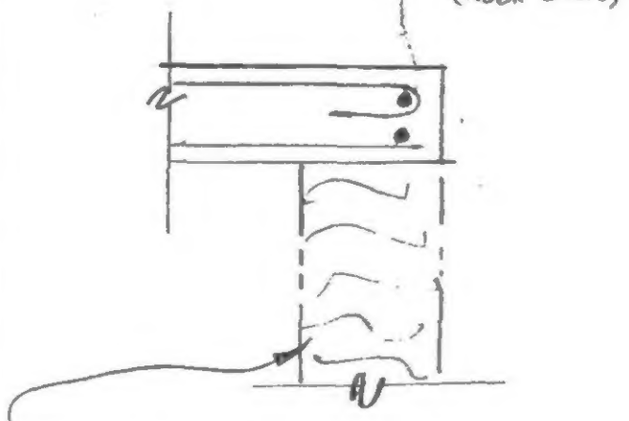

S	P

LICENSED PROFESSIONAL ENGINEER
LESLIE E. ROBERTSON
No. 34360
UNIVERSITY OF THE STATE OF NEW YORK

SIGNED
DRAWN
REVIEWED

19-X4-2.4

PROJECT LOWER MANHATTAN DEVELOPMENT WORLD TRADE CENTER MODIFICATION

DETAILS AT CENTER SUPPORT

DATE 6-29-73

REVISIONS

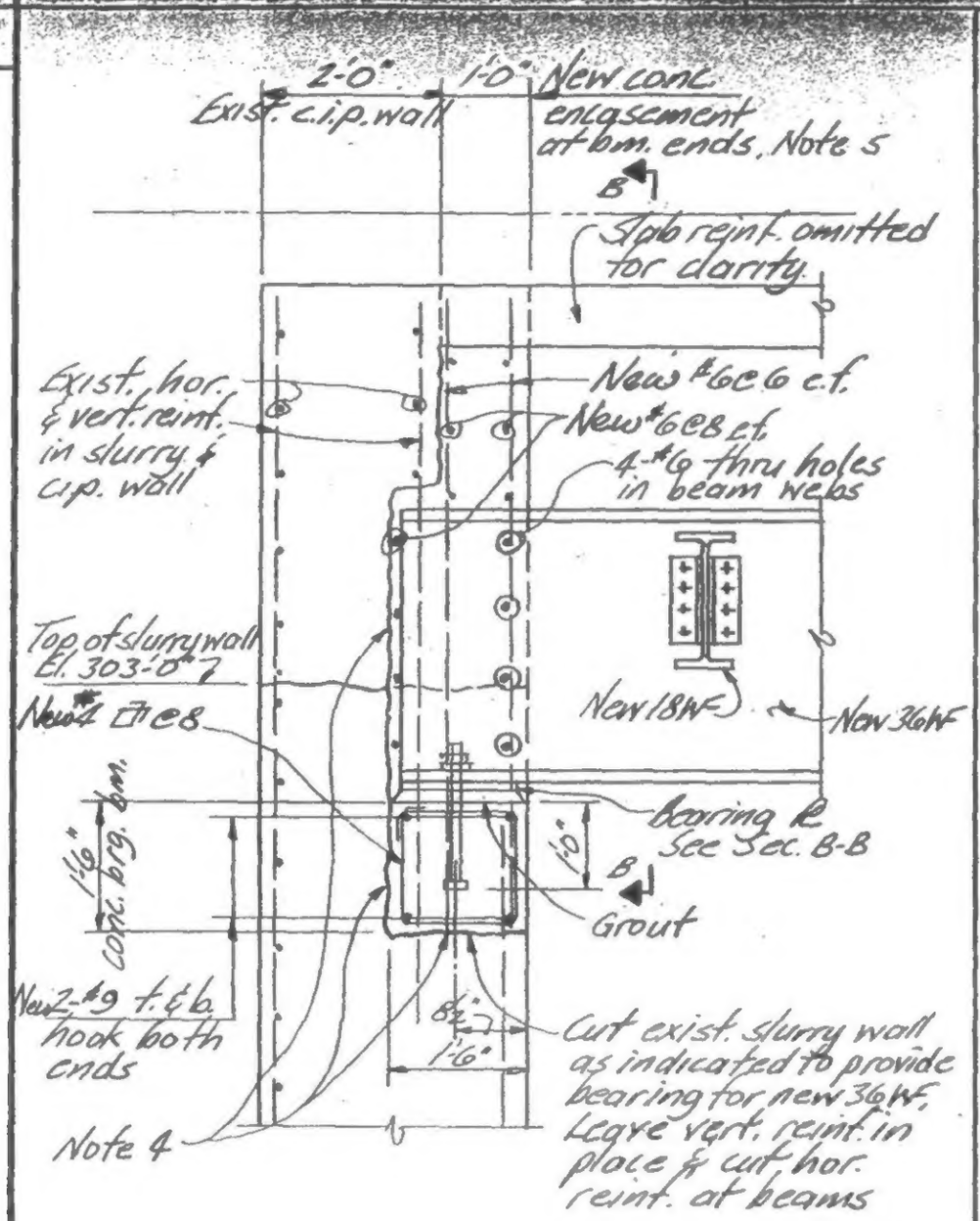

A

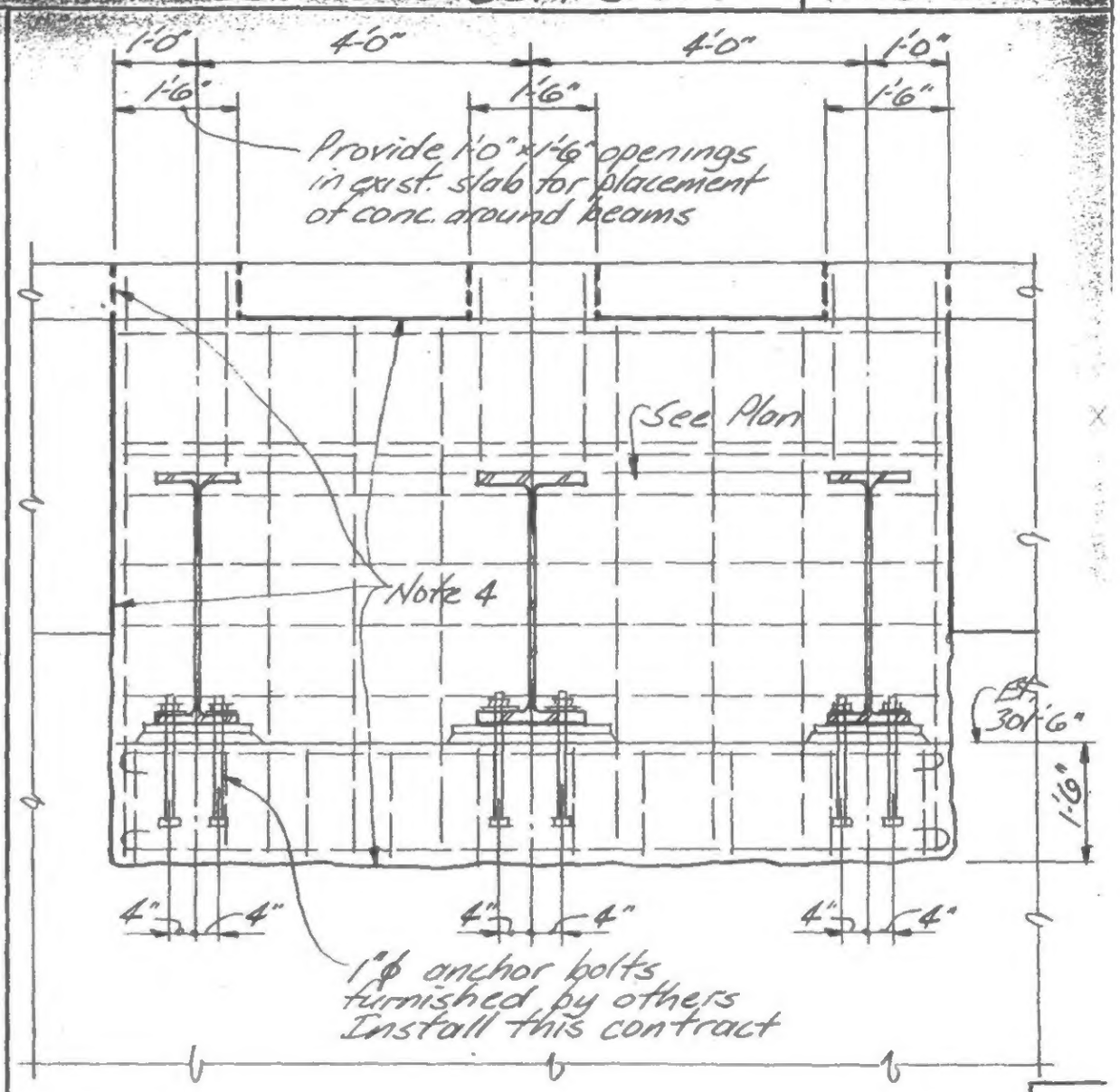

B

Construction Sequence:

A. Remove slurry wall, c.i.p. wall and slab as indicated to accommodate new beams. Note 3.

B. Place concrete bearing beam with anchor bolts in proper location.

C. Encase ends of beams after installation of new steel is complete.

LICENSED PROFESSIONAL ENGINEER LESLIE E. ROBERTSON No. 34360 UNIVERSITY OF THE STATE OF NEW YORK

SIGNED DS

DRAWN JA

REVIEWED

19-X4-3.1

PROJECT: WORLD TRADE CENTER MODIFICATION

TITLE: DETAILS AT CENTER SUPPORT

DATE: 6-29-78

REVISIONS

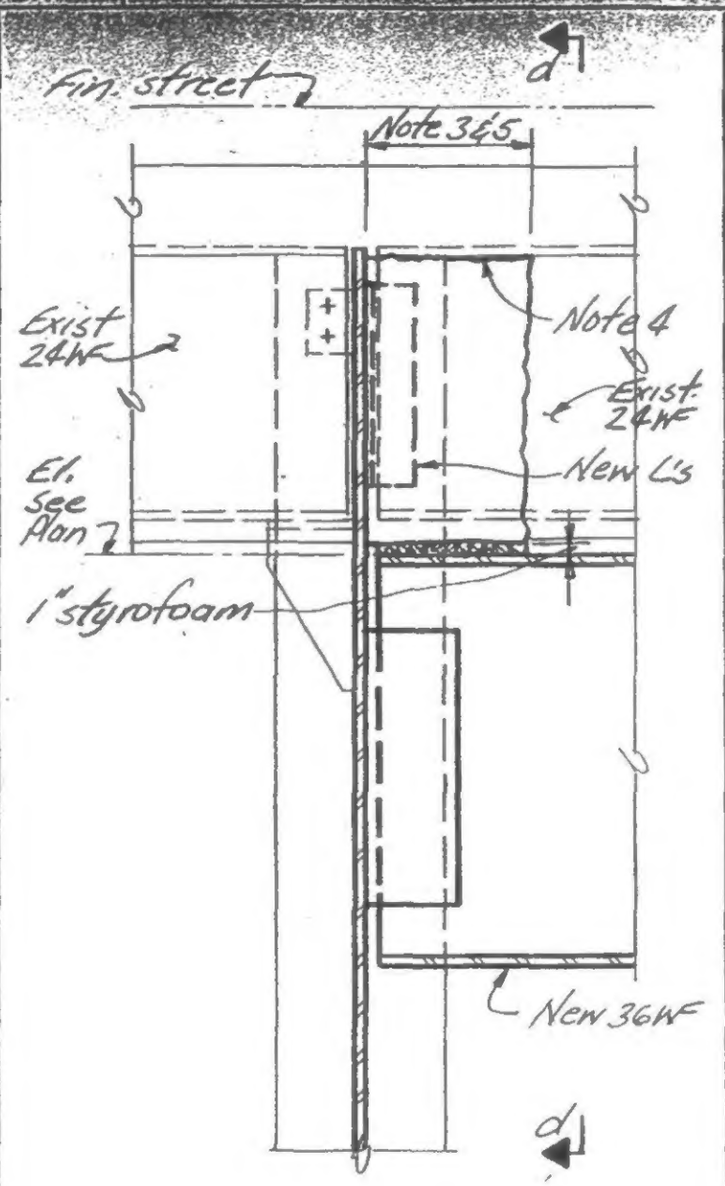

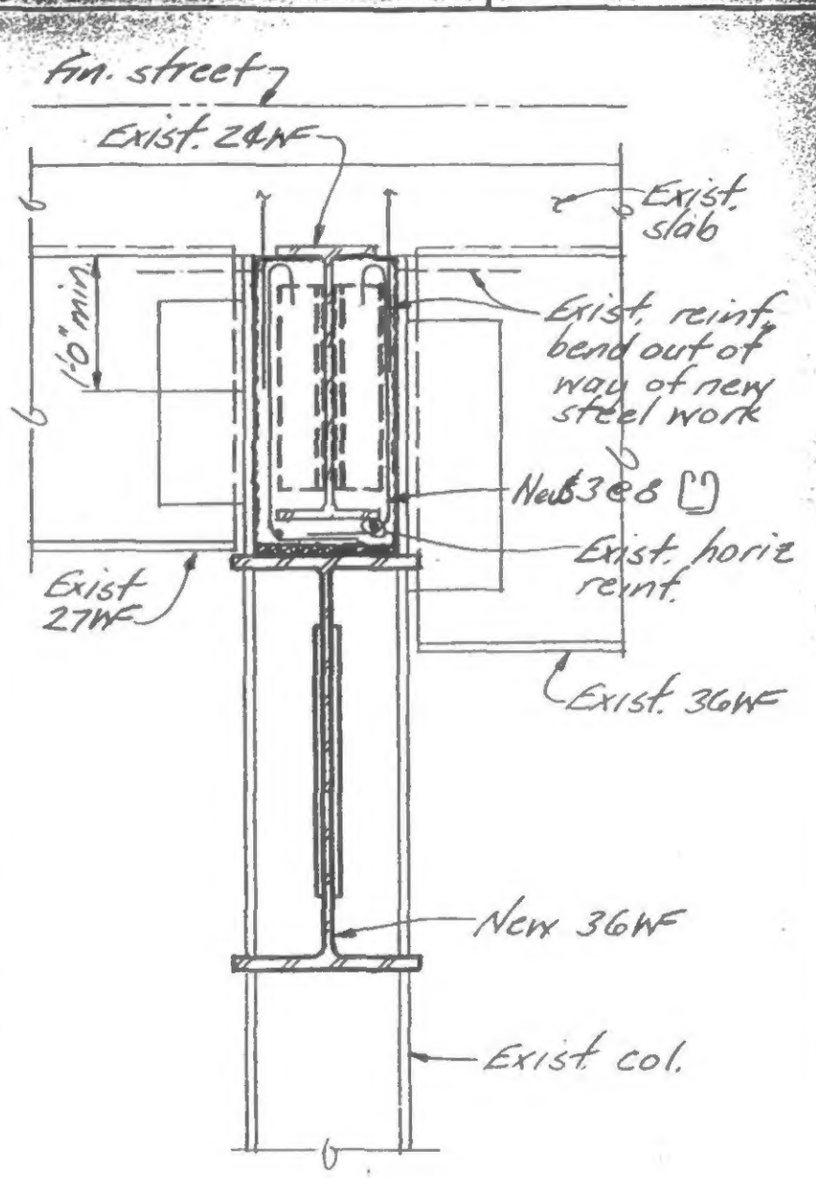

LICENSED PROFESSIONAL ENGINEER
LESLIE E. ROBERTSON
No. 34960
UNIVERSITY OF THE STATE OF NEW YORK

SIGNED: OS

DRAWN: JA

REVIEWED:

0

opp. hand | E | d

19-X4-3.2

REVISIONS

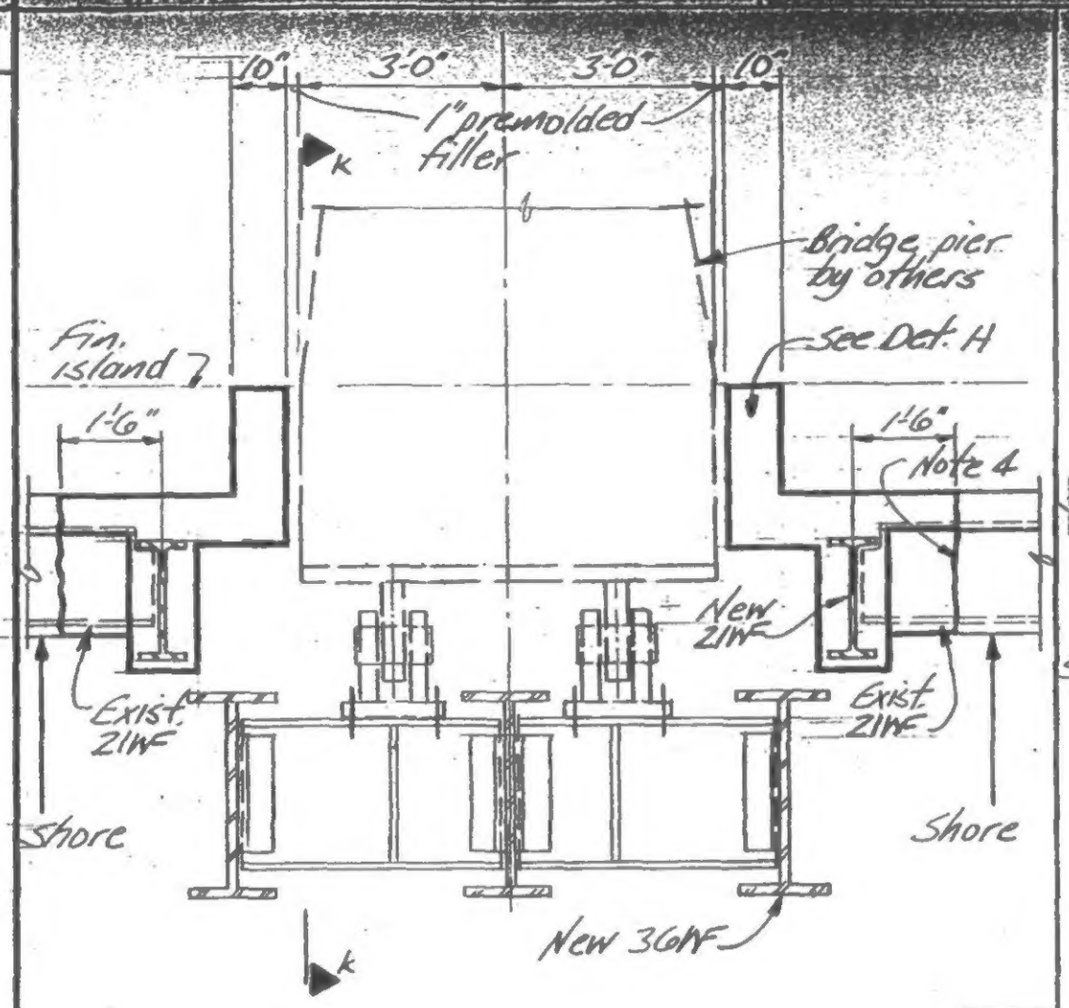

F

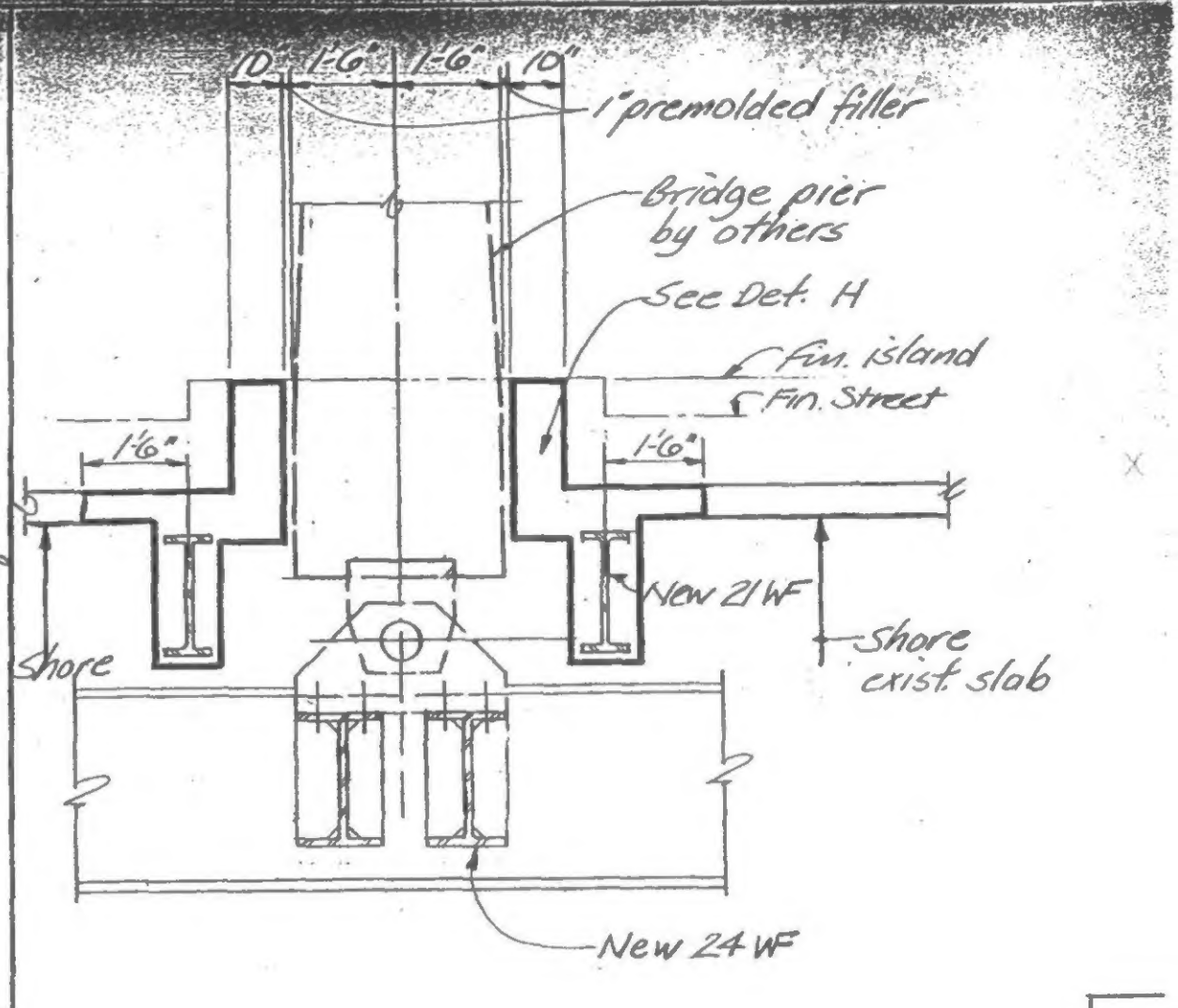

G

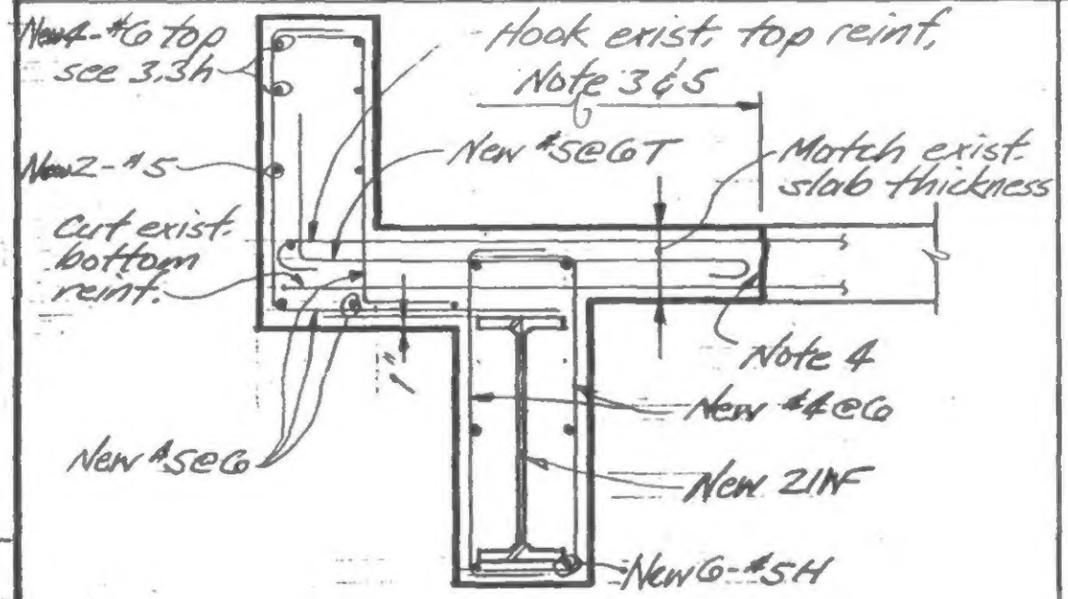

H

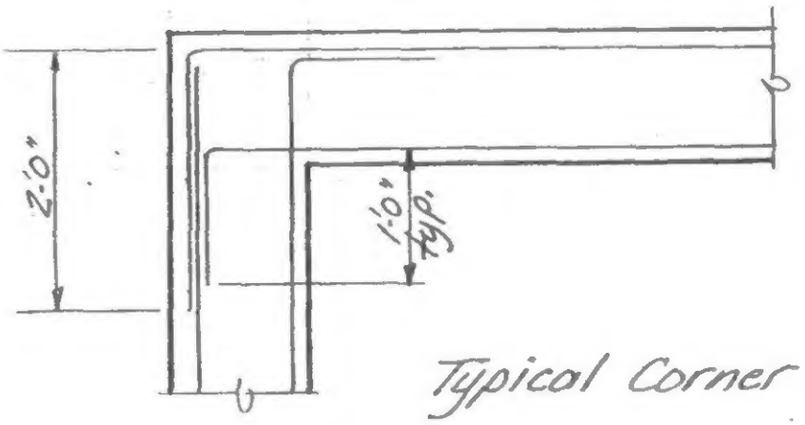

Typical Corner Plan

h

LICENSED PROFESSIONAL ENGINEER
LESLIE E. ROBERTSON
No. 34360
UNIVERSITY OF THE STATE OF NEW YORK

SIGNED DS
DRAWN T.R.
REVIEWED LERP

19-X4-3.3